CHAPTER 57

WING

TABLE OF CONTENTS

Subject	Subject No.
WINGS - GENERAL	57-00
Station Diagram	57-00-1
MAIN FRAME	57-10
Allowable Damage	57-10-1
Figure 1 - Wing Interspar Structures	
Figure 2 - Wing Center Section Inspar Structure	
Figure 3 - Wing Spar Chords	
Structure Identification	57-10-2
Figure 1 - Wing Interspar Structure	
Figure 2 - Wing Center Section	
Figure 3 - Wing Front and Rear Spar	
Figure 4 - Wing Interspar Stiffener	
Figure 5 - Wing Center Section to Floor Beam Attachment Identification	
Sealing of Integral Tank Structural Repairs	57-10-3
Figure 1 - Deleted	
Figure 2 - Deleted	
Figure 3 - Deleted	
Stiffener Repair	57-10-4
Service Bulletin Repair Chart	
Figure 1 - Typical Wing Upper Surface Z Stiffener Repair	
Figure 2 - Typical Wing Upper Surface Vent Stiffener Repair	
Figure 3 - Wing Upper Surface Stiffener Repair at Skin Splice	
Figure 4 - Wing Center Section Upper Surface Stiffener Repair	
Figure 5 - Typical Wing Lower Surface Z Stiffener Repair with Formed Angles	
Figure 6 - Typical Wing Lower Surface Z Stiffener Repair with Machined Angles	
Figure 7 - Center Wing Lower Surface J Stiffener Repair	
Figure 8 - Wing Center Section Upper Surface Z Stiffener Repair	
Figure 9 - Wing Center Section Cracked Upper Surface Stiffener Repair	
Spar Repair	57-10-6
Service Bulletin Repair Chart	
Figure 1 - Wing Front Spar Web Repair	
Figure 2 - Wing Rear Spar Web Repair	
Rib Repair	57-10-7
Service Bulletin Repair Chart	
Beam Repair	57-10-8
Service Bulletin Repair Chart	

BOEING PROPRIETARY - Copyright © - Unpublished Work - See title page for details.

Subject	Subject No.
AUXILIARY.	57-20
Allowable Damage	57-20-1
Figure 1 - Wing Leading Edge	
Figure 2 - Wing Trailing Edge	
Figure 3 - Wingtip	
Figure 4 - Main Landing Gear Trunnion Support Beam - Trunnion Bearing Hole	
Figure 5 - Main Landing Gear Beam Allowable Damage	
Structure Identification	57-20-2
Figure 1 - Wing Leading Edge	
Figure 2 - Wing Trailing Edge	
Figure 3 - Wingtip	
Figure 4 - Flap Track Fairing	
Figure 5 - Main Landing Gear Beam Identification	
Wing Leading Edge Repair	57-20-3
Wing Trailing Edge Repair	57-20-4
Service Bulletin Repair Chart	
Figure 1 - Ground Spoiler Fitting Assembly Lug Repair	
Figure 2 - Wing Trailing Edge - Aileron Hinge Fitting Crack Repair	
Wing Tip Repairs	57-20-5
Figure 1 - Wing Tip Skin - External Repair	
Figure 2 - Wing Tip Skin - Flush Repair	
Fuel Boost Pump Housing Repairs	57-20-6
Figure 1 - Fuel Boost Pump Housing - External Repair	
Figure 2 - Fuel Boost Pump Housing - Repair and Sealing	
PLATES/SKIN	57-30
Allowable Damage.	57-30-1
Figure 1A - Wing Inspar Skin Allowable Damage (Inboard of WS 583.00) (Alternate Method)	
Figure 1B - Wing Inspar Skin Allowable Damage (Inboard of WS 583.00) (Preferred Method)	
Figure 2 - DELETED	
Figure 3 - Wing Center Section Skin	
Figure 4 - Wing Trailing Edge Skin Allowable Damage	
Figure 5 - Wing Inspar Skin - Removal of Damage at a Fastener	
Figure 6 - Procedure to Locate, Record, Evaluate, and Report In-Spar Upper Wing Skin, Upper Surface Corrosion	
Skin Identification	57-30-2
Figure 1 - Wing Interspar	
Figure 2 - Wing Center Section	
Figure 3 - Wing Leading Edge	
Figure 4 - Wing Trailing Edge	
Main Frame Skin Repair.	57-30-3
Service Bulletin Repair Chart	
Figure 1 - Wing, Upper Surface Interspar Skin - Typical Repair	
Figure 2 - Wing Upper Skin - Repair at Zee Stiffener	
Figure 3 - Wing Lower Skin Tapered Plate Repair - Damage Up to 3.00 Inches in Width	
Figure 4 - Wing Lower Skin Multiple Plate Repair - Damage Up to 3.00 Inches in Width	
Figure 5 - Wing Skin Lower Surface - Corrosion Repair at Fuel Tank Access Door Cutouts	
Figure 6 - Wing Lower Surface - Fuel Tank Boost Pump Access Door Cutout Repair	

BOEING PROPRIETARY - Copyright © - Unpublished Work - See title page for details.

Subject	Subject No.
Auxiliary Skin Repair	57-30-4
Service Bulletin Repair Chart	
Figure 1 - Wing Leading Edge Skin - Flush Repair	
Figure 2 - Wing Fixed Leading Edge Skin - Flush Repair	
Figure 3 - Fixed Leading Edge Skin Repair at Front Spar	
Figure 4 - Repairs to Glass/Aramid/Graphite/Epoxy Composite Wing Trailing Edge Skin Panels	
Figure 5 - Fixed Leading Edge Skin Splice Repair	
Leading Edge Skin Repair Sealing	57-30-5
ATTACH FITTINGS	57-40
FLIGHT SURFACES	57-50
Allowable Damage	57-50-1
Figure 1 - Wing Leading Edge Flaps	
Figure 2 - Wing Leading Edge Slats	
Figure 3 - Wing Inboard Trailing Edge Flap Skin Allowable Damage	
Figure 4 - Ailerons	
Figure 5 - Spoiler Skin Allowable Damage - Aluminum Honeycomb Spoilers	
Figure 6 - Aileron Skin Allowable Damage (Graphite Composite Aileron)	
Figure 7 - Aileron Tab Skin Allowable Damage (Graphite Composite Aileron)	
Figure 8 - Aileron Structure Allowable Damage (Graphite Composite Aileron)	
Figure 9 - Aileron Tab Structure Allowable Damage (Graphite Composite Aileron)	
Figure 10 - Aileron Fitting Allowable Damage (Graphite Composite Aileron)	
Figure 11 - Aileron Tab Fitting Allowable Damage (Graphite Composite Aileron)	
Figure 12 - Spoiler Skin Allowable Damage (Graphite Composite Spoiler)	
Figure 13 - Spoiler Structure Allowable Damage (Graphite Composite Spoiler)	
Figure 14 - Spoiler Fitting Allowable Damage (Graphite Composite Spoiler)	
Figure 15 - Wing Outboard Trailing Edge Flap Skin Allowable Damage	
Figure 16 - Wing Inboard Trailing Edge Flap Structure Allowable Damage	
Figure 17 - Wing Outboard Trailing Edge Flap Structure Allowable Damage	
Structure Identification	57-50-2
Figure 1 - Wing Leading Edge Flaps	
Figure 2 - Wing Leading Edge Slats, Skin and Structure Identification	
Figure 3 - Trailing Edge Flaps, Skin and Structure Identification	
Figure 4 - Aileron Skin and Structure Complete - Identification (Glass Fabric/Metal Ailerons)	
Figure 4A- Aileron Skin Identification (Graphite Composite Aileron)	
Figure 4B- Aileron Structure Identification (Graphite Composite Aileron)	

BOEING PROPRIETARY - Copyright © - Unpublished Work - See title page for details.

Subject | Subject No.

Structure Identification (Continued) 57-50-2
Figure 4C- Aileron Tab Skin Identification (Graphite Composite Aileron)
Figure 4D- Aileron Tab Structure Identification (Graphite Composite Aileron)
Figure 4E- Aileron Tab Fairing Skin Identification (Graphite Composite Aileron)
Figure 4F- Aileron Fitting Identification (Graphite Composite Aileron)
Figure 4G- Aileron Tab Fitting Identification (Graphite Composite Aileron)
Figure 5 - Spoiler Skin and Structure Identification (Metal Spoiler)
Figure 6 - Spoiler Skin Identification (Graphite Composite Spoiler)
Figure 7 - Spoiler Structure Identification (Graphite Composite Spoiler)
Figure 8 - Spoiler Fitting Identification (Graphite Composite Spoiler)
Wing Leading Edge Flaps and Slats Repair 57-50-3
Figure 1 - Wing Leading Edge Slat Skin - Flush Repair Aft of the Nose Beam
Figure 2 - Wing Leading Edge Flap Repair - External Repair Between Ribs
Figure 3 - Wing Leading Edge Flap Skin - External Repair at Ribs
Figure 4 - Wing Leading Edge Slat Spar Repair
Figure 5 - Slat Repair - Aft Skin
Figure 6 - Wing Leading Edge Slat - Skin Erosion Repair
Figure 7 - Leading Edge Slat Skin Splice Repair
Figure 8 - Wing Leading Edge Slat Skin - Flush Repair Forward of the Nose Beam
Wing Trailing Edge Flaps Repair 57-50-4
Service Bulletin Repair List
Figure 1 - Wing Inboard and Outboard Trailing Edge Fore Flap Leading Edge Skin - External Repair
Figure 2 - Trailing Edge Mid Flap Repair - Lower Skin
Figure 3 - Trailing Edge Mid Flap Leading Edge Skin Repair
Figure 4 - Wing Inboard Trailing Edge Mid Flap Bonded Upper Skin and Doubler Repair
Figure 5 - Wing Inboard and Outboard Trailing Edge Aft Flap Leading Edge Skin Repair
Figure 6 - Wing Inboard Midflap Trailing Edge Wedge Repair
Figure 7 - Outboard Trailing Edge Mid-Flap Leading Edge Chafing Repair
Spoilers Repair 57-50-5
Figure 1 - Skin Repair - Ground Spoilers
Figure 2 - Partial Skin Repair - Ground Spoilers
Figure 3 - Skin Repair - Flight Spoilers
Figure 4 - Partial Skin Repair - Flight Spoilers
Figure 5 - Spoiler Skin Repair (Graphite Composite Spoilers)
Figure 6 - Spoiler Structure Repair (Graphite Composite Spoilers)
Figure 7 - Graphite Spoiler Upper Skin Repair at a Hinge Fitting

BOEING PROPRIETARY - Copyright © - Unpublished Work - See title page for details.

Subject	Subject No.
Aileron Repair	57-50-6
Figure 1 - Aileron Skin Repair (Graphite Composite Ailerons)	
Figure 2 - Aileron Structure Repair (Graphite Composite Ailerons)	

WINGS

1. General

A. This chapter contains information on identification, allowable damage and repairs to the structural components of the wing, leading and trailing edge flaps, spoilers and ailerons.

B. The components covered in this chapter are basically similar for all models of the 737 and US T-43A airplanes. Where detail differences between airplanes occur, they are denoted by flagnotes on the applicable illustrations, or by the introduction of separate details on figures.

2. Sealing

A. The wing areas, enclosed by the front and rear spars outboard of the fuselage on all airplanes and the wing center section on some airplanes are sealed to form integral fuel tanks.

B. Repairs to the wing involving the fuel tanks must be sealed. Refer to 57-10-3 for sealing requirements and processes.

3. Control Surface Balancing

A. Refer to 51-80 thru 51-80-7 for information on control surface balancing.

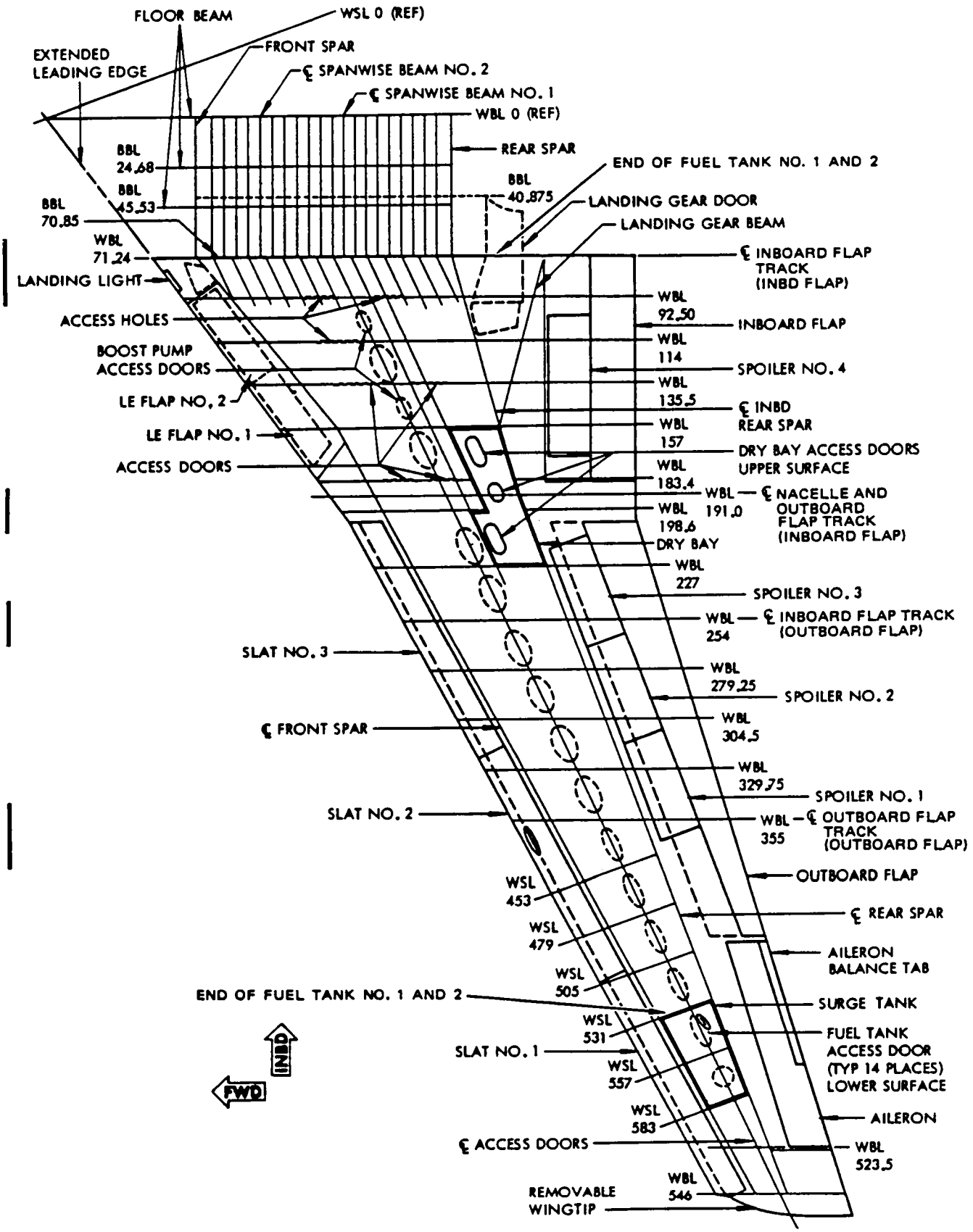

Wing Station Diagram
Figure 1

NOTE: DAMAGE, SUCH AS BLENDOUTS, TRIMOUTS, OR DENTS:

- THAT OCCUR TO A STRUCTURALLY SIGNIFICANT ITEM (SSI) GIVEN IN SRM 51-00-4, FIG. 3 AND,
- THAT ARE WITHIN THE ALLOWABLE DAMAGE LIMITS OF THE BOEING SRM,

DO NOT HAVE AN EFFECT ON THE DAMAGE TOLERANCE PROPERTIES OF THE SSI. THEREFORE, EXISTING SUPPLEMENTAL STRUCTURAL INSPECTION DOCUMENT (SSID) INSPECTION PROGRAMS REMAIN EFFECTIVE.

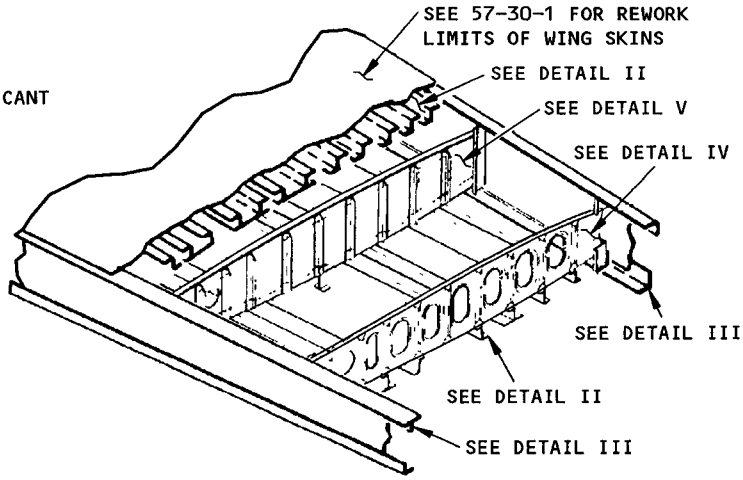

TYPICAL WING INTERSPAR STRUCTURE

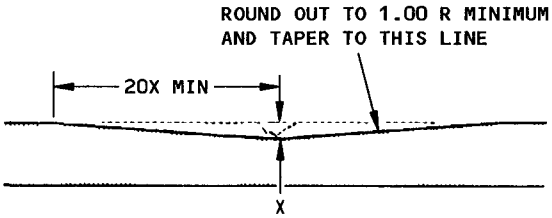

NOTE

- MAXIMUM PERMISSIBLE REWORK DEPTH OF SCRATCH OR GOUGE IS 0.05 INCH, BUT MUST NOT EXCEED 20% OF MATERIAL THICKNESS.

SECTION THROUGH GOUGE
DETAIL I

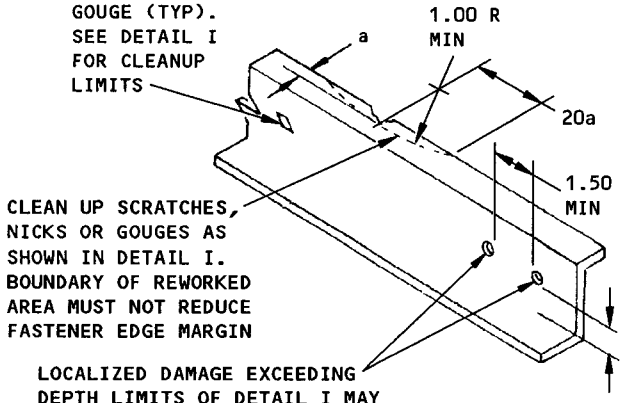

NOTE

- a IS EQUAL TO, OR LESS THAN, THE DIAMETER OF THE LARGEST RIVET OR BOLT HOLE IN THE IMMEDIATE VICINITY OF THE DAMAGE.
- DAMAGE CLEANUP IS NOT ALLOWED IN ANY CROSS-SECTION IN WHICH A HOLE IS LOCATED.
- CORROSION - APPLY GOUGE CLEANUP LIMITS WHEN CLEANING UP CORROSION. SEE DETAIL I.

WING UPPER AND LOWER STIFFENERS
DETAIL II

Allowable Damage - Wing Interspar Structure
Figure 1 (Sheet 1)

BOEING PROPRIETARY - Copyright © - Unpublished Work - See title page for details.

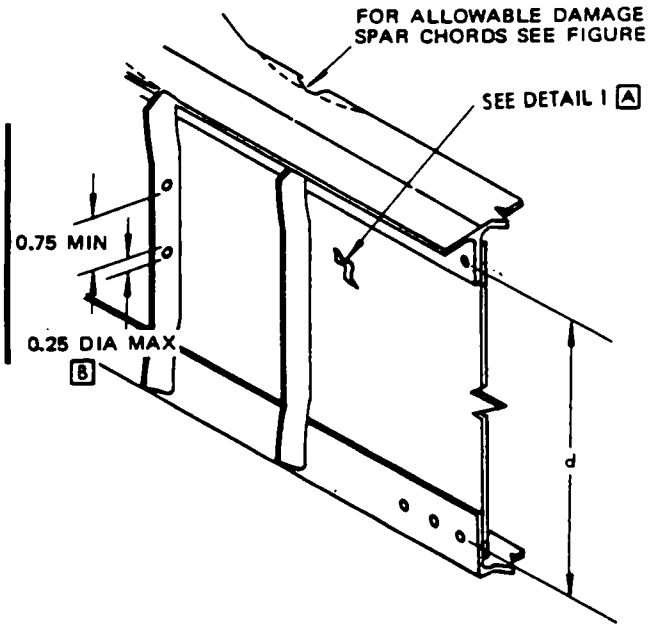

NOTE

- NO HOLES IN FUEL TANKS OR INBOARD OF W. S. 583.0

A MAXIMUM ALLOWABLE CROSS SECTIONAL AREA REMOVED FROM SPAR WEB SHALL NOT EXCEED 20 PERCENT INCLUDING EXISTING HOLES. MAXIMUM DEPTH OF SCRATCH OR GOUGE IS 20 PERCENT OF WEB THICKNESS

B NUMBER OF HOLES IN ANY SINGLE STIFFENER NOT TO EXCEED 4

FRONT AND REAR SPAR
DETAIL III

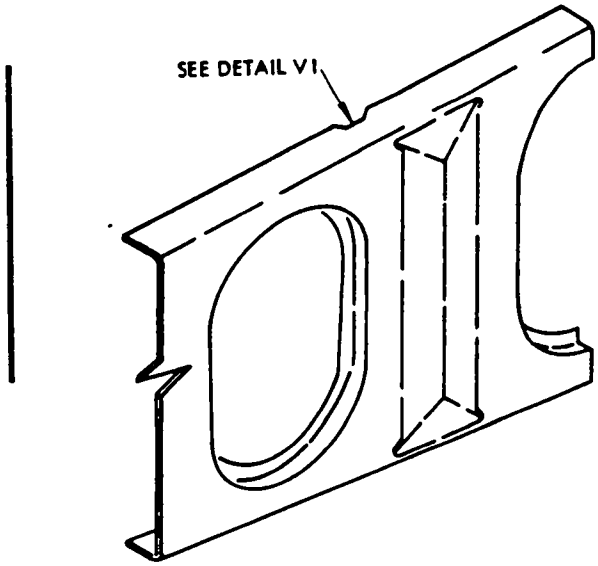

NOTE

- NO HOLES IN TANK END RIBS
- MAXIMUM DEPTH OF SCRATCH OR GOUGE IS 0.04 BUT NOT TO EXCEED 20 PERCENT OF MATERIAL THICKNESS. ROUND OUT SCRATCHES AND GOUGES AS SHOWN.

INTERSPAR RIBS WITHOUT STIFFENERS
DETAIL IV

Allowable Damage - Wing Interspar Structure
Figure 1 (Sheet 2)

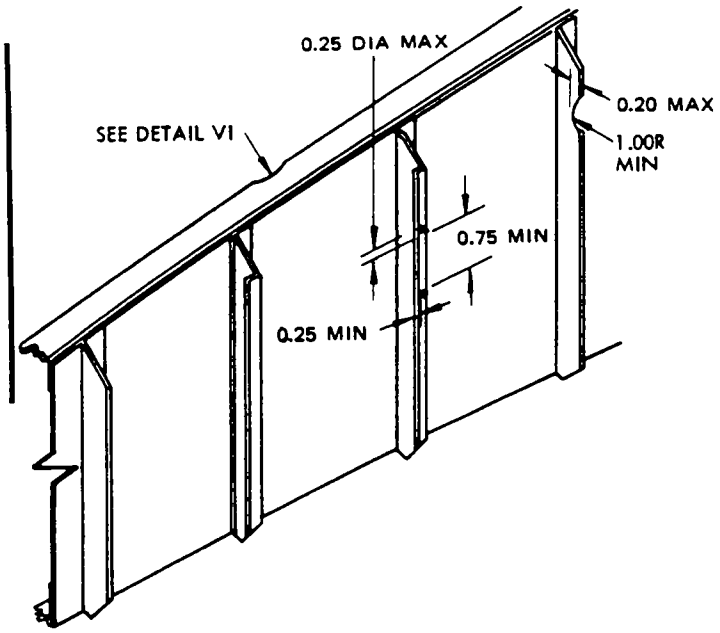

NOTE

- NO HOLES IN TANK END RIBS
- RIB STIFFENERS
  MAXIMUM DEPTH OF SCRATCH OR GOUGE IS 0.05 BUT NOT TO EXCEED 20 PERCENT MATERIAL THICKNESS.
  MAXIMUM NUMBER OF HOLES PER STIFFENER IS 4.
- RIB CHORD
  MAXIMUM DEPTH OF SCRATCH OR GOUGE IS 0.04 BUT NOT TO EXCEED 20 PERCENT MATERIAL THICKNESS. ROUND OUT SCRATCHES AND GOUGES AS SHOWN IN DETAIL I.

INTERSPAR RIBS WITH STIFFENERS
DETAIL V

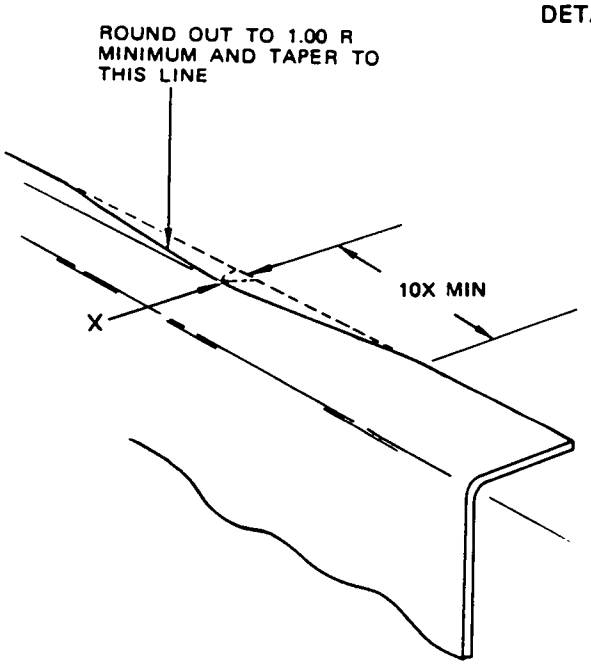

NOTE

- X EQUALS DIAMETER OF LARGEST EXISTING HOLE IN DAMAGE AREA OF DAMAGED COMPONENT. EDGE MARGIN OF FASTENERS MUST NOT BE AFFECTED.

EDGE NICKS AND CRACKS
DETAIL VI

Allowable Damage - Wing Interspar Structure
Figure 1 (Sheet 3)

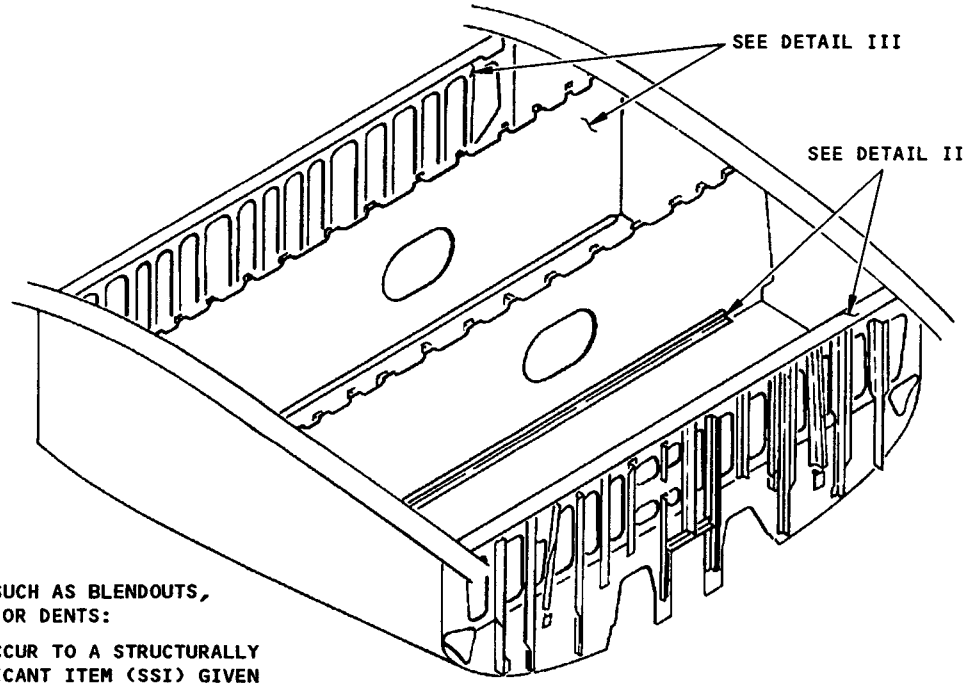

NOTE: DAMAGE, SUCH AS BLENDOUTS, TRIMOUTS OR DENTS:

- THAT OCCUR TO A STRUCTURALLY SIGNIFICANT ITEM (SSI) GIVEN IN SRM 51-00-4, FIG. 3 AND,
- THAT ARE WITHIN THE ALLOWABLE DAMAGE LIMITS OF THE BOEING SRM,

DO NOT HAVE AN EFFECT ON THE DAMAGE TOLERANCE PROPERTIES OF THE SSI. THEREFORE, EXISTING SUPPLEMENTAL STRUCTURAL INSPECTION DOCUMENT (SSID) INSPECTION PROGRAMS REMAIN EFFECTIVE.

WING CENTER SECTION INTERSPAR STRUCTURE

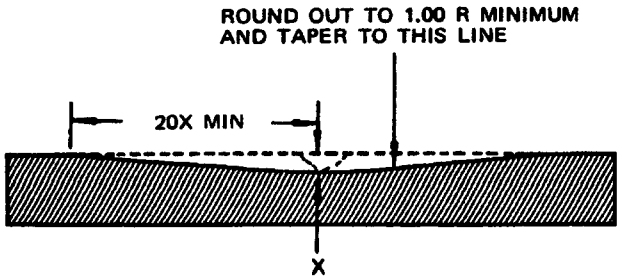

NOTE

MAXIMUM DEPTH X OF SCRATCH OR GOUGE IS 0.05 BUT NOT TO EXCEED 20 PERCENT OF MATERIAL THICKNESS.

SECTION THROUGH GOUGE

DETAIL I

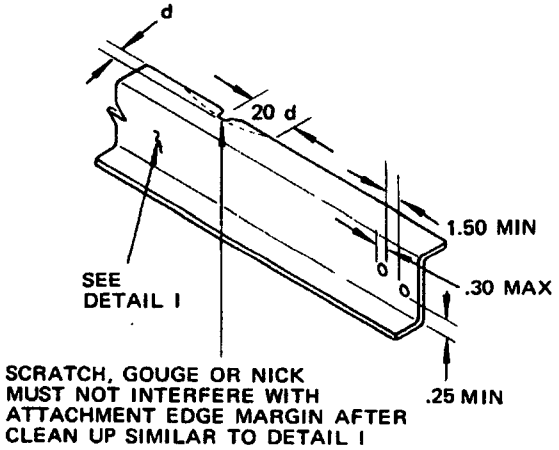

NOTE

d EQUALS OR IS LESS THAN DIAMETER OF LARGEST EXISTING HOLE IN DAMAGE AREA OF DAMAGED COMPONENT.

UPPER SPAR AND SPANWISE BEAM CHORDS

DETAIL II

Allowable Damage - Wing Center Section Inspar Structure
Figure 2 (Sheet 1 of 2)

BOEING PROPRIETARY - Copyright © - Unpublished Work - See title page for details.

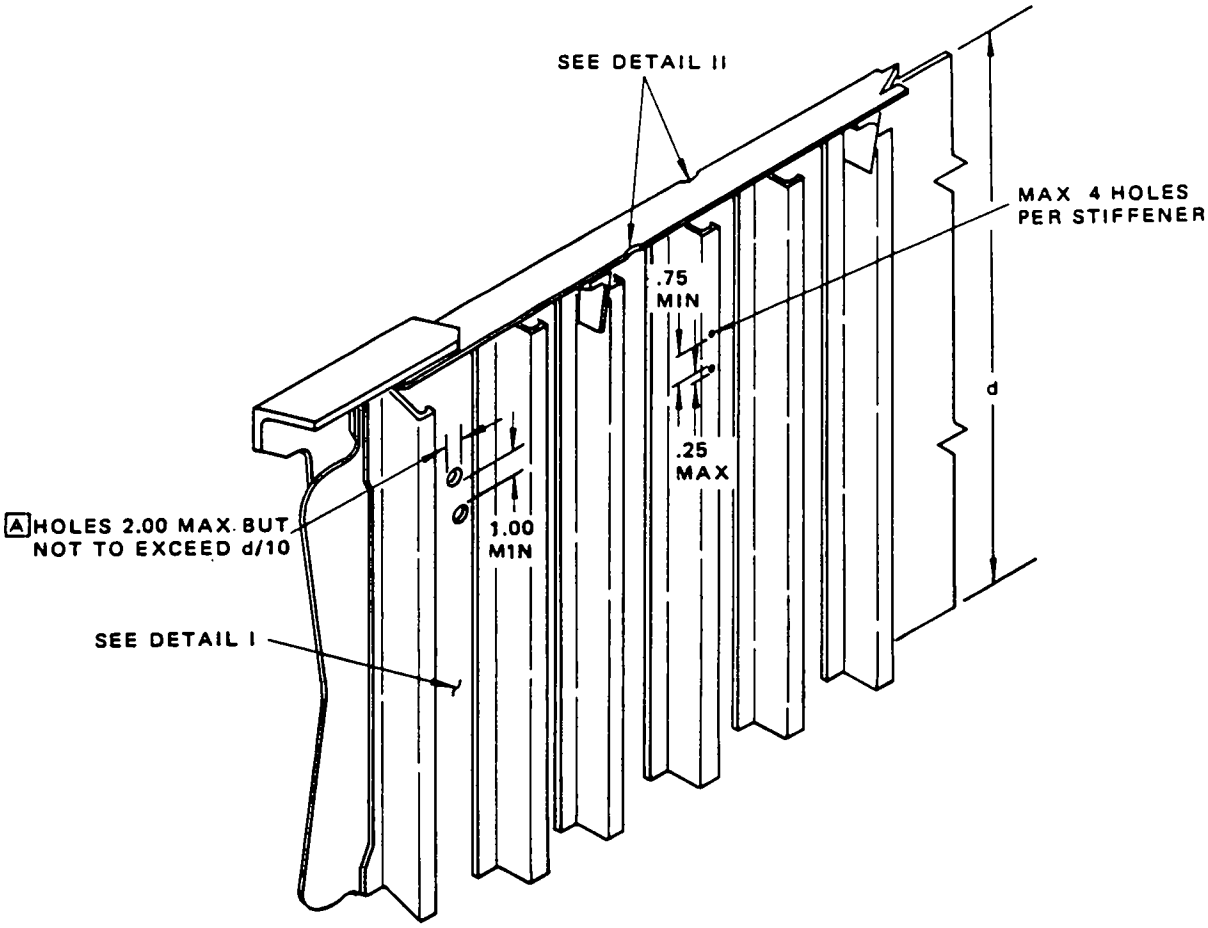

NOTE

- ALLOWABLE DAMAGE AS SHOWN WILL REDUCE FATIGUE LIFE.

A MAXIMUM ALLOWABLE CROSS SECTIONAL AREA REMOVED FROM SPARS AND SPANWISE BEAMS SHALL NOT EXCEED 20% INCLUDING EXISTING HOLES.

SPARS AND SPANWISE BEAMS

DETAIL III

Allowable Damage - Wing Center Section Inspar Structure
Figure 2 (Sheet 2 of 2)

NOTES

- DAMAGE, SUCH AS BLENDOUTS, TRIMOUTS, OR DENTS:
  - THAT OCCUR TO A STRUCTURALLY SIGNIFICANT ITEM (SSI) GIVEN IN SRM 51-00-4, FIG. 3 AND,
  - THAT ARE WITHIN THE ALLOWABLE DAMAGE LIMITS OF THE BOEING SRM,

  DO NOT HAVE AN EFFECT ON THE DAMAGE TOLERANCE PROPERTIES OF THE SSI. THEREFORE, EXISTING SUPPLEMENTAL STRUCTURAL INSPECTION DOCUMENT (SSID) INSPECTION PROGRAMS REMAIN EFFECTIVE.
- REFER TO THE APPLICABLE GRAPH FOR THE ALLOWABLE LOSS OF MATERIAL FROM SPAR CHORDS. ACCUMULATED CHORD DAMAGE AT A CROSS SECTION MUST NOT BE MORE THAN THESE LIMITS.
- ALLOWABLE DEPTHS AND LOSS OF CROSS SECTIONAL AREA ARE AFTER DAMAGE CLEANUP.
- REFER TO DETAILS I AND II FOR DAMAGE CLEANUP DATA.
- WHEN YOU REMOVE FASTENERS TO PERMIT CLEANUP, MAKE A COUNTERSINK AGAIN AND INSTALL OVERSIZE FASTENERS AS NECESSARY AFTER THE REWORK.
- MAXIMUM DEPTH OF BLEND OUT OVER 3/16 TO 3/8 INCH DIAMETER RIVETS MUST NOT BE MORE THAN 0.020 INCH. WHERE DAMAGE IS DEEPER THAN THIS DEPTH, REMOVE THE RIVET AND RECOUNTERSINK THE HOLE. COUNTERSINK DEPTH MUST NOT BE MORE THAN 2/3 OF THE REMAINING THICKNESS OF THE COUNTERSUNK MEMBER.
- RIVETS OR STEEL TAPERLOK BOLTS ARE THE ONLY FASTENERS PERMITTED TO ATTACH LOWER WING SKINS TO SPAR CHORDS UNLESS A SPECIAL SKIN PAD IS PROVIDED.
- RIVETS MUST NOT BE DRIVEN IN THE WEB LEGS OF UPPER SPAR CHORDS. USE TITANIUM OR STEEL LOCKBOLTS OR HEX DRIVE FASTENERS TO REPLACE THE INITIAL FASTENERS. REFER TO SRM 51-30 FOR DETAILS OF FASTENERS AND HOLE SIZES.

[A] ON LOWER CHORDS LOSS OF CROSS SECTIONAL AREA DUE TO USE OF OVERSIZE FASTENERS MUST BE INCLUDED WHEN CONSIDERING ALLOWABLE DAMAGE.

[B] DELETED.

[C] REVISED TO CHANGE ALLOWABLE DAMAGE TO FRONT SPAR CHORDS AND TO INCLUDE SB 57-1067.

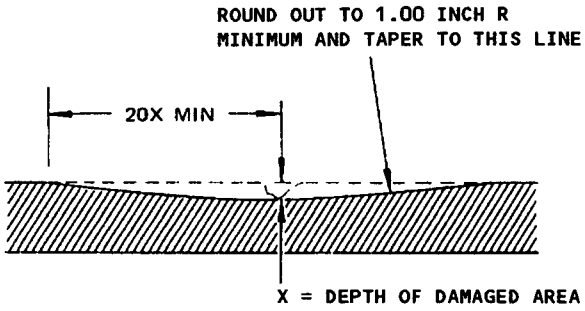

SECTION THROUGH GOUGE, SCRATCH OR CORROSION

DETAIL I

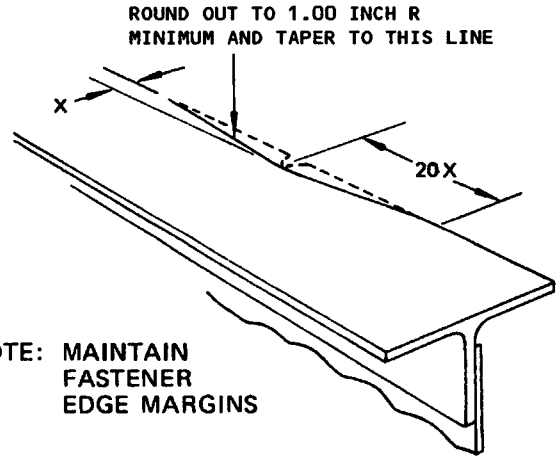

NOTE: MAINTAIN FASTENER EDGE MARGINS

EDGE NICKS, CRACKS AND CORROSION

DETAIL II

Allowable Damage - Wing Spar Chords
Figure 3 (Sheet 1)

BOEING PROPRIETARY - Copyright © - Unpublished Work - See title page for details.

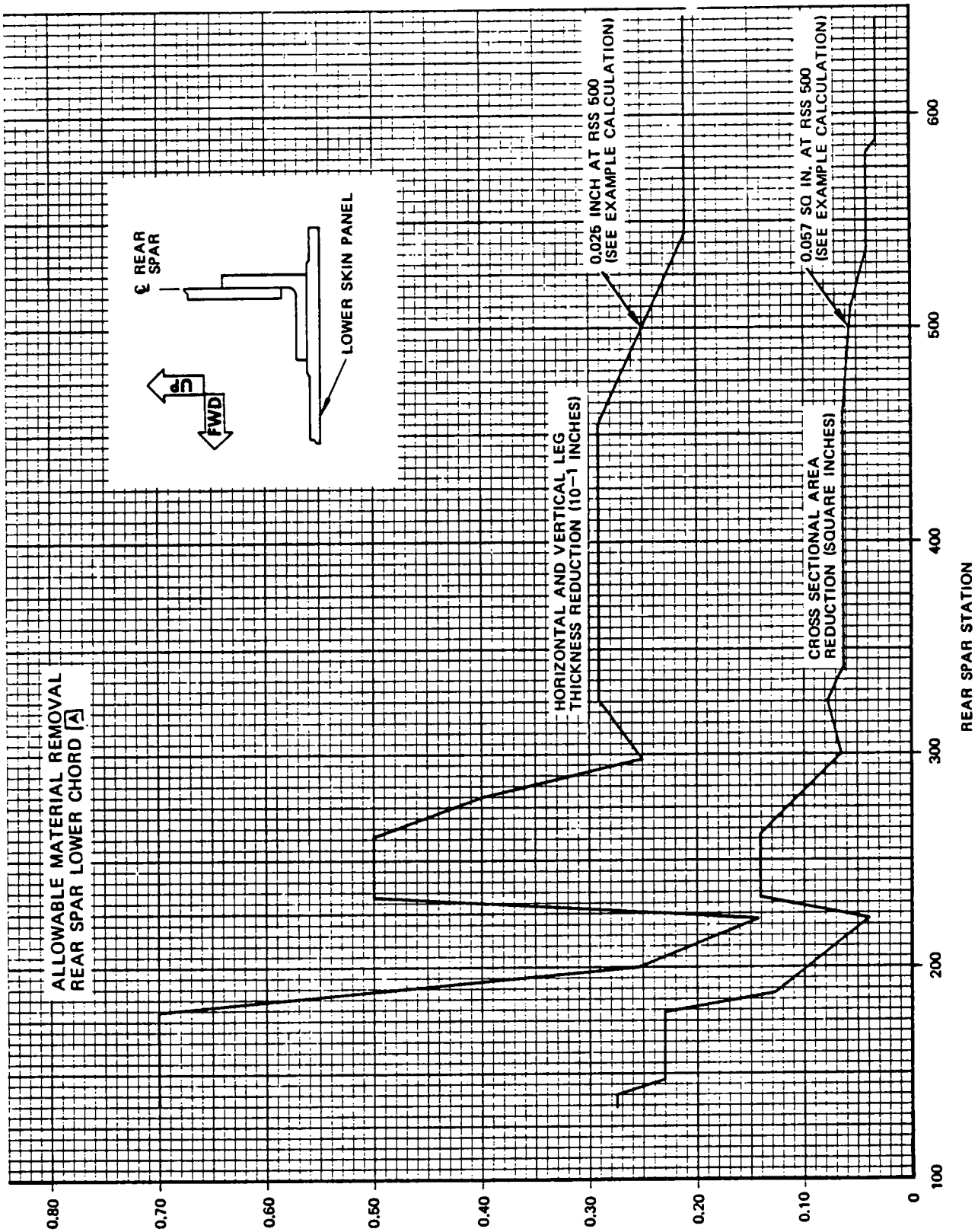

REAR SPAR CHORD AREA REDUCTION AND
VERTICAL AND HORIZONTAL LEG THICKNESS REDUCTION

Allowable Damage - Wing Spar Chords
Figure 3 (Sheet 2)

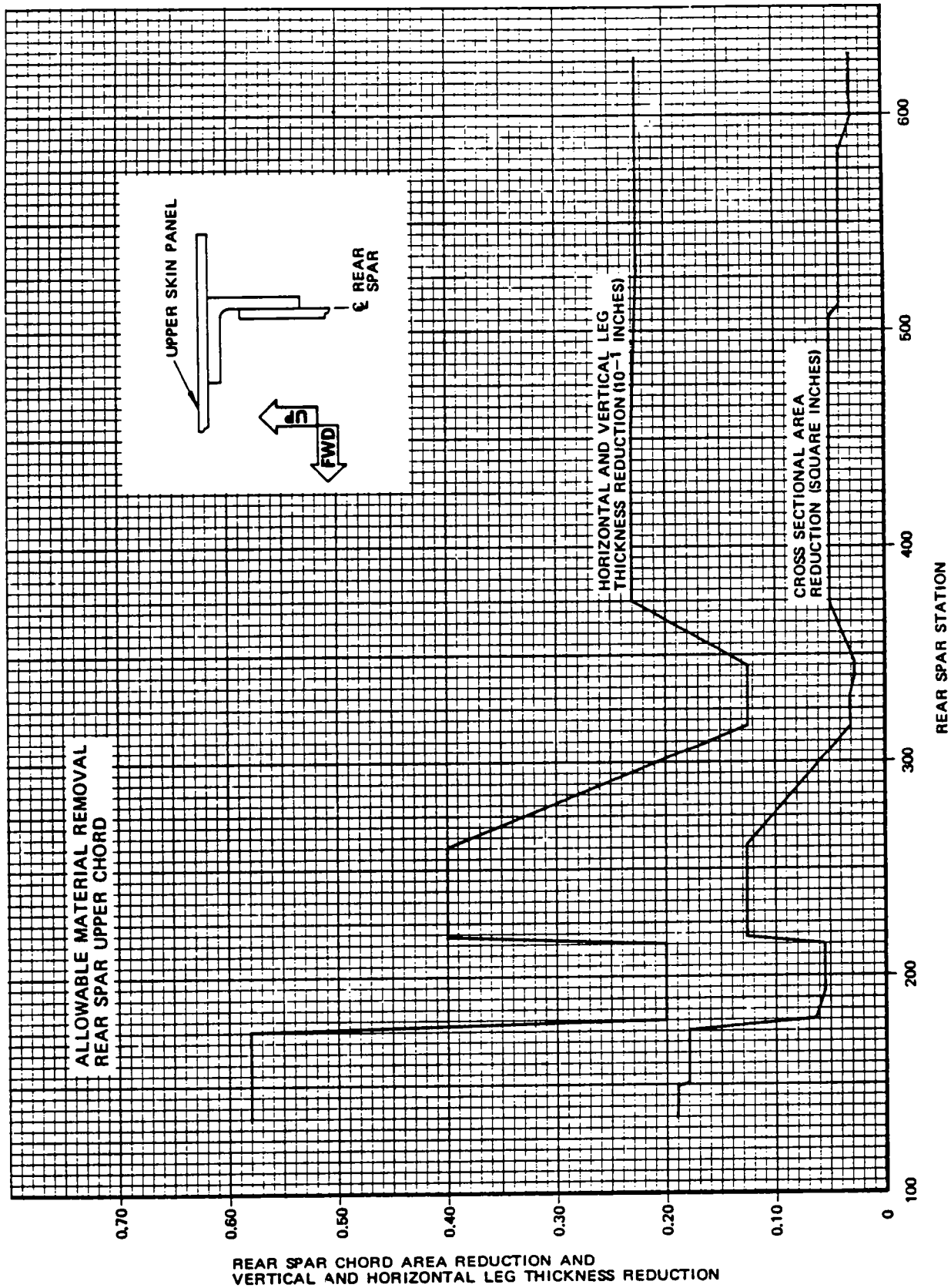

Allowable Damage - Wing Spar Chords
Figure 3 (Sheet 3)

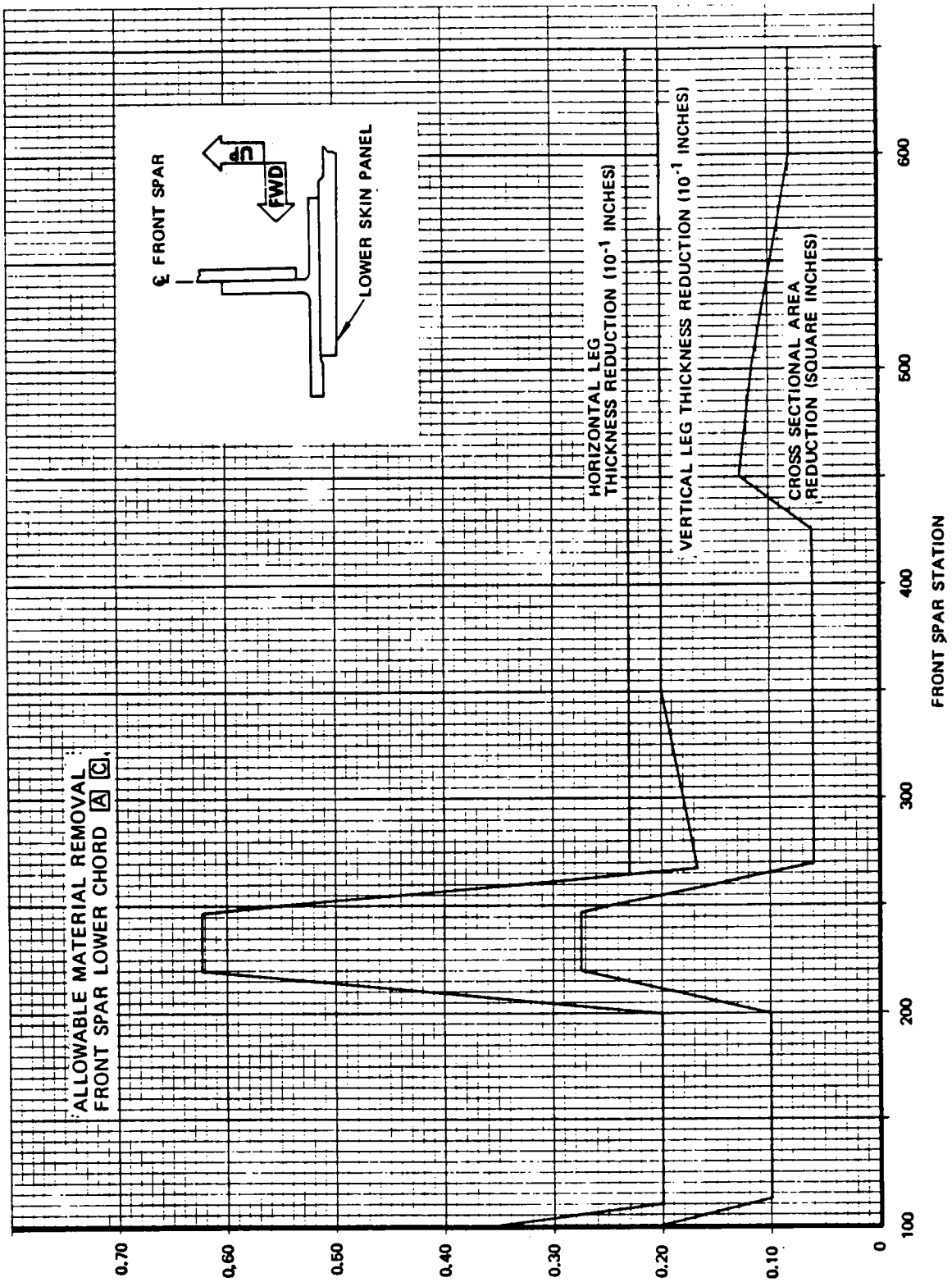

FRONT SPAR CHORD HORIZONTAL AND VERTICAL LEG THICKNESS AND AREA REDUCTION

Allowable Damage - Wing Spar Chords
Figure 3 (Sheet 4)

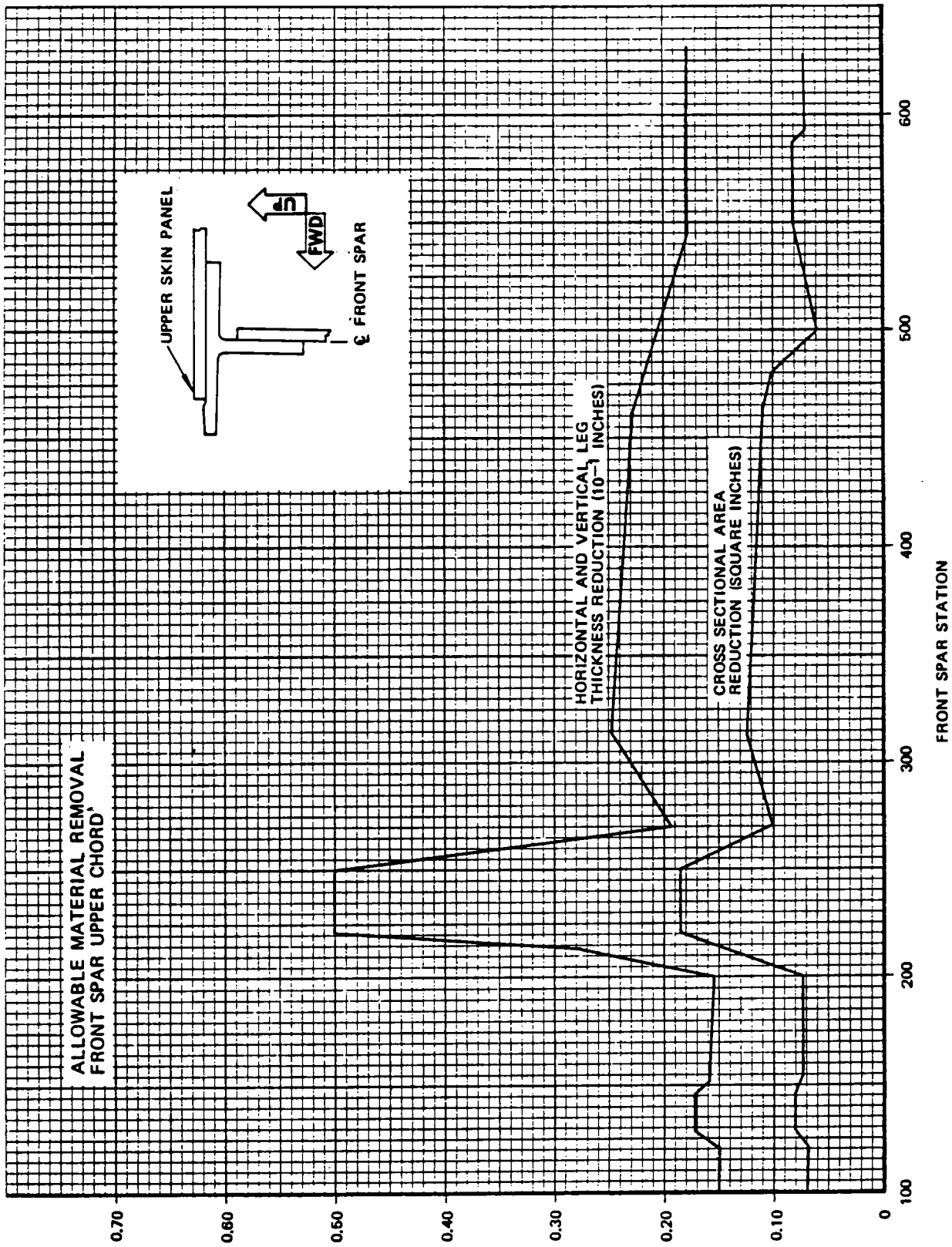

FRONT SPAR CHORD HORIZONTAL AND VERTICAL LEG THICKNESS AND AREA REDUCTION

Allowable Damage - Wing Spar Chords
Figure 3 (Sheet 5)

EXAMPLE CALCULATION

ASSUME CORROSION IS FOUND AROUND FASTENERS THROUGH REAR SPAR LOWER CHORD AND WEB AT REAR SPAR STATION 500, CORROSION IS REMOVED AS DESCRIBED ON SHEET 1 OF FIGURE 3, AND OVERSIZE FASTENERS ARE REQUIRED. FOR REWORK DUE TO CORROSION IN T-43A AIRPLANES, SEE T.O. 1T-43A-23.

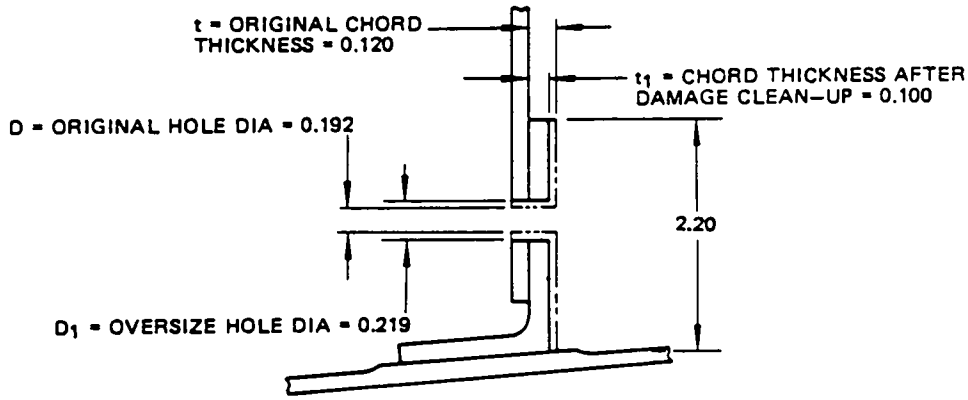

SECTION AT RSS 500

LOSS OF THICKNESS = $t-t_1$ = 0.120-0.100 = 0.020 INCH FROM THE APPROPRIATE GRAPH (SHEET 2) PERMITTED THICKNESS REDUCTION AT RSS500 IS 0.025. THEREFORE REDUCTION OF CHORD THICKNESS IS ALLOWABLE.

LOSS OF CROSS SECTIONAL AREA = LOSS IN AREA DUE TO THICKNESS REDUCTION + LOSS IN AREA DUE TO OVERSIZE FASTENER HOLE.

LOSS DUE TO THICKNESS REDUCTION = $(t-t_1) \times (2.20-D)$ = 0.020 x (2.20-0.192) = 0.040 SQ IN.
LOSS DUE TO OVERSIZE HOLE = $(D_1-D) \times t_1$ = (0.219-0.192) x 0.100 = 0.003 SQ IN.
TOTAL AREA LOSS = 0.040 + 0.003 = 0.043 SQ IN.

FROM THE APPROPRIATE GRAPH (SHEET 2) PERMITTED AREA REDUCTION AT RSS500 IS 0.057 SQ IN. THEREFORE REDUCTION OF CHORD CROSS SECTIONAL AREA IS ALLOWABLE.

Allowable Damage - Wing Spar Chords
Figure 3 (Sheet 6)

ITEM	MATERIAL	REPAIR FIG. NO.
1	BAC1506-1511 7075-T6511	
2	BAC1505-100559 7075-T6511	
3	BAC1520-1344 7075-T6	
4	AND10137-2402 7075-T6	
5	BAC1506-1831 7075-T6511	
6	AND10136-2001 2024-T3511	
7	0.063 6061-T4	
8	0.050 CLAD 2024-T42	
9	0.160 7075-T6	
10	BAC1505-100626 7075-T6	
11	BAC1505-100322 7075-T6511	
12	BAC1517-1417 7178-T6511	
13	BAC1503-100081 7178-T6511	
14	AND10133-1002 7075-T6511	
15	AND10133-1003 7075-T6511	

ITEM	MATERIAL	REPAIR FIG. NO.
16	BAC1520-1524 OPTIONAL BAC1520-1439 7075-T6	
17	0.250 AL PL 7178-T6	
18	BAC1503-4233 7178-T6511	
19	BAC1520-1525 OPTIONAL BAC1520-1440 7075-T6	
20	AND10134-1404 7178-T6	
21	BAC1504-8192 7178-T6	
22	BAC1517-1417 7178-T6	
23	BAC1520-1441 7075-T6	
24	BAC1520-1442 7075-T6	
25	0.250 MACHINED 7178-T6	
26	BAC1517-1418 7075-T6511	
27	0.10 AL SH 7178-T6	
28	BAC1520-1457 7075-T6511	
29	0.313 AL SH 7075-T6	

Wing Interspar Structure - Material Identification
Figure 1 (Sheet 1)

ITEM	MATERIAL	REPAIR FIG. NO.
30	BAC1520-1456 7075-T6	
31	0.090 AL SH 7178-T6	
32	BAC1517-1418 7075-T6	
33	BAC1520-1462 7075-T6	
34	BAC1520-1461 7075-T6	
35	0.125 AL SH 7178-T6	
36	0.20 AL SH 7075-T6	
37	AND10136-2003 7075-T6	
38	BAC1505-100587 2024-T3511	
39	FORGING 7079-T611	
40	BAC1503-100307 OPTIONAL BAC1503-9437 7075-T6	
41	BAC1520-1464 7075-T6	
42	AND10134-1404 7075-T6	
43	AND10133-2401 7075-T6	
44	BAC1520-1468 7075-T6	
45	BAC1490-2636 2024-T4	

ITEM	MATERIAL	REPAIR FIG. NO.
46	BAC1504-8181 7075-T6511	
47	BAC1503-7392 7075-T6	
48	0.050 CLAD SH 7075-T6	
49	AND10134-1003 7075-T6511	
50	AND10134-1203 7075-T6511	
51	0.050 7178-T6	
52	0.080 CLAD 2024-T3	
53	AND10134-1006 7075-T6511	
54	BAC1520-1449 7075-T6	
55	BAC1520-1448 7075-T6	
56	0.112 7075-T6	
57	0.125 2024-T3	
58	BAC1503-100236 7075-T6511	
59	0.100 7075-T6	
60	AND10133-1001 7075-T6511	
61	BAC1520-1450 7075-T6	

Wing Interspar Structure - Material Identification
Figure 1 (Sheet 2)

ITEM	MATERIAL	REPAIR FIG. NO.
62	BAC1520-1451 7075-T6	
63	AND10136-1401 7075-T6	
64	0.071 AL SH 7075-T6	
65	0.063 7075-T6	
66	AND10134-0601 7075-T6511	
67	0.050 7075-T6	
68	BAC1520-1423 2024-T3511	
69	0.050 CLAD 2024-T42	
70	AND10134-1003 2024-T3511	
71	AND10136-2005 2024-T42	
72	BAC1490-2711 2024-T42	
73	BAC1506-1758 7178-T6511	
74	0.050 CLAD 2024-T3	
75	0.25 AL PL 7075-T6	
76	0.063 AL SH 7075-T6	

ITEM	MATERIAL	REPAIR FIG. NO.
77	PLASTIC GLASS FABRIC WITH HONEYCOMB CORE	
78	MACHINE FROM 1.50 PLATE 7075-T651	
79	BAC1517-1418 7178-T6511	
80	0.160 7178-T6	
81	AND10137-2001 7075-T6	
82	AND10133-0602 7075-T6511	
83	0.020 SHT 7178-T6	
84	0.090 SHT 7075-T6	
85	0.080 SHT 7075-T6	
86	AND10134-1205 7075-T6511	
87	0.375 PLATE 7075-T6	
88	0.063 7178-T6	
89	0.071 7178-T6	
90	AND10134-1206 7075-T6511	
91	AND10136-1602 7075-T6511	

Wing Interspar Structure - Material Identification
Figure 1 (Sheet 3)

ITEM	MATERIAL	REPAIR FIG. NO.
92	BAC1517-1317 7075-T6	
93	0.080 7178-T6	
94	0.125 7075-T6	
95	BAC1503-100308 OPTIONAL BAC1503-9437 7075-T6	
96	BAC1503-9437 7075-T6	
97	AND10133-1003 7178-T6511	
98	BAC1514-1570 7178-T6511	
99	AND10133-0701 7075-T6511	
100	AND10133-0601 7075-T6511	
101	0.016 + 0.016 7075-T6	
102	0.016 7075-T6	
103	AND10134-1406 7075-T6	
104	DELETED	
105	0.140 7075-T6	
106	BAC1503-100512 OPTIONAL BAC1503-100308 7075-T6	
107	FORGING 7075-T73	

ITEM	MATERIAL	REPAIR FIG. NO.
108	SHEAR TIE FORGING 7075-T73	
109	BACKUP FITTING FORGING 7075-T73	
110	FLAP TRACK SUPPORT FITTING BAC1671-6 Ti 6AL-4V EXTRUSION PER BMS 7-44 CONDITION I	
111	MACHINED WEB 0.375 7075-T651	
112	MACHINED WEB 0.313 7075-T651	
113	UPPER CHORD BAC1520-1344 7075-T73	
114	BAC1503-100513 OPTIONAL BAC1503-100307 BAC1503-9437 7075-T6	
115	DELETED	
116	DOUBLER 0.140 7075-T6	
117	DELETED	
118	ANGLE AND10133-3001 7075-T73	
119	FILLER 0.080 7075-T651	
120	DOUBLER 0.080 7075-T6	

Wing Interspar Structure - Material Identification
Figure 1 (Sheet 4)

ITEM	MATERIAL	REPAIR FIG. NO.
121	MACHINED WEB 0.563 7075-T651	
122	BAC1504-8205 7075-T6511	
123	AND10133-1002 7075-T6511	
124	BAC1503-7393 7075-T6	
125	AND10134-1407 7075-T6	
126	AND10133-0602 7075-T6511	

ITEM	MATERIAL	REPAIR FIG. NO.

Wing Interspar Structure - Material Identification
Figure 1 (Sheet 4A)

NOTES

A FOR CUM LINE NUMBERS:
1 THRU 4

B FOR CUM LINE NUMBERS:
5 THRU 433, 435 THRU 448

C FOR CUM LINE NUMBERS:
33 THRU 71, 73 THRU 83, 85 THRU 101, 103 THRU 109, 111 THRU 127, 129 THRU 142, 144 THRU 148, 150 THRU 154, 156, 159 THRU 161, 163, 165, 167 THRU 172, 174 THRU 183, 185 THRU 193, 195, 197, 198, 200 THRU 202, 204, 206, 207, 209 THRU 211, 213, 214, 216, 218 THRU 222, 224, 226 THRU 229, 231 THRU 233, 235 THRU 237, 239 THRU 241, 243, 244, 246 THRU 248, 250, 252, 253, 257 THRU 262, 264, 266, 267, 269 THRU 273, 277, 279, 280, 282 THRU 285, 287, 291 THRU 293, 296, 323 THRU 325, 327, 331, 374, 375, 380, 383

D FOR CUM LINE NUMBERS:
72, 84, 102, 110, 128, 143, 149, 155, 157, 158, 162, 164, 166, 173, 164, 194, 196, 199, 203, 205, 208, 212, 215, 217, 223, 225, 230, 234, 238, 242, 245, 249, 251, 254 THRU 256, 263, 265, 268, 274 THRU 276, 278, 281, 286, 288 THRU 290, 294, 295, 297 THRU 322, 326, 328 THRU 330, 332 THRU 373, 376 THRU 379, 381, 382, 384 AND ON

E FOR CUM LINE NUMBERS:
1 THRU 29

F FOR CUM LINE NUMBERS:
30 AND ON

G FOR CUM LINE NUMBERS:
1 THRU 32

H FOR CUM LINE NUMBERS:
33 AND ON

J FOR CUM LINE NUMBERS:
72, 84, 102, 110, 128, 143, 149, 155, 157, 158, 162, 164, 166, 173, 184, 194, 196, 199, 203, 205, 208, 212, 215, 217, 223, 225, 230, 234, 238, 242, 245, 249, 251, 254 THRU 256, 263, 265, 268, 274

K FOR CUM LINE NUMBERS:
1 THRU 37, 42

L FOR CUM LINE NUMBERS:
1 THRU 134 PRIOR TO INCORPORATION OF SB 57-1031

M FOR CUM LINE NUMBERS:
1 THRU 37, 39 THRU 53, 55 THRU 60

N FOR CUM LINE NUMBERS:
38, 54, 61 AND ON

O FOR CUM LINE NUMBERS:
38 THRU 41, 43 THRU 71, 73 THRU 83, 85 THRU 101, 103 THRU 109, 111 THRU 127, 129 THRU 142, 144 THRU 148, 150 THRU 154, 156, 159 THRU 161, 163, 165, 167 THRU 172, 174 THRU 183, 185 THRU 193, 195, 197, 198, 200 THRU 202, 204, 206, 207, 209 THRU 211, 213, 214, 216, 218 THRU 222, 224, 226 THRU 229, 231 THRU 233, 235 THRU 237, 239 THRU 241, 243, 244, 246 THRU 248, 250, 252, 253, 257 THRU 262, 264, 266, 267, 269 THRU 273

P FOR CUM LINE NUMBERS:
275 AND ON

Q FOR CUM LINE NUMBERS:
33 THRU 274

Wing Interspar Structure - Material Identification
Figure 1 (Sheet 5)

NOTES (CONTINUED)

[R] FOR CUM LINE NUMBERS:
277, 279, 280, 282 THRU 285, 287, 291 THRU 293, 296, 323 THRU 325, 327, 331, 374, 375, 380, 383

[S] FORGINGS OF 7079-T611 MATERIAL HAVE BEEN SUPERSEDED BY FORGINGS OF 7075-T73 MATERIAL ON LATE PRODUCTION AIRPLANES. FORGINGS OF 7075-T73 MATERIAL ARE RECOMMENDED WHEN REPLACEMENT BECOMES NECESSARY

[T] FORGINGS OF 7079-T6 MATERIAL HAVE BEEN REPLACED BY FORGINGS OF 7075-T73 IN PRODUCTION; 7075-T73 FORGINGS ARE RECOMMENDED WHEN EXISTING STOCKS OF 7079-T6 ARE EXHAUSTED

[U] FOR CUM LINE NUMBERS:
135 AND ON AND 1 THRU 134 WITH SB 57-1031 INCORPORATED

[V] FOR CUM LINE NUMBERS:
275, 276, 278, 281, 286, 288 THRU 290, 294, 295, 297 THRU 322, 326, 328 THRU 330, 332 THRU 373, 376 THRU 379, 381, 382, 384 AND ON

[W] FOR CUM LINE NUMBERS:
419 THRU 441

[X] FOR CUM LINE NUMBERS:
33 THRU 433, 435 THRU 448

[Y] FOR CUM LINE NUMBERS:
434, 449 AND ON

[Z] FOR CUM LINE NUMBERS:
38, 54, 61 THRU 433, 435 THRU 448

[AA] FOR CUM LINE NUMBERS:
1 THRU 464

[AB] FOR CUM LINE NUMBERS:
465 AND ON

[AC] FOR CUM LINE NUMBERS:
441, 442, 445, 458, 489 AND ON

[AD] FOR AIRPLANES WITH 125,000 LB MAX TAXI GROSS WEIGHT

[AE] FOR ALL AIRPLANES EXCEPT THOSE LISTED IN [AD]

Wing Interspar Structure - Material Identification
Figure 1 (Sheet 5A)

REF DWG
65-45412

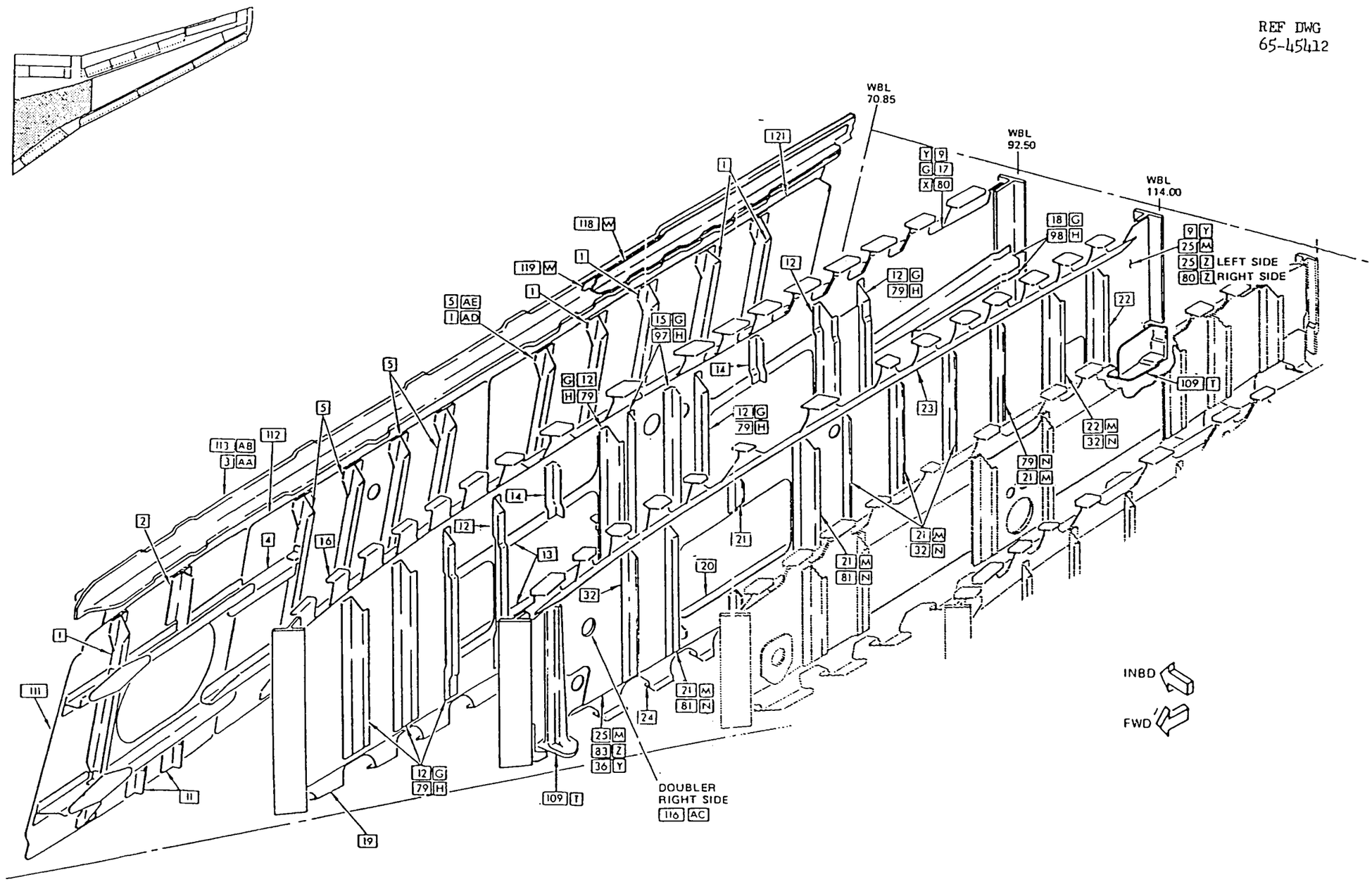

Wing Interspar Structure - Material Identification
Figure 1 (Sheet 6)

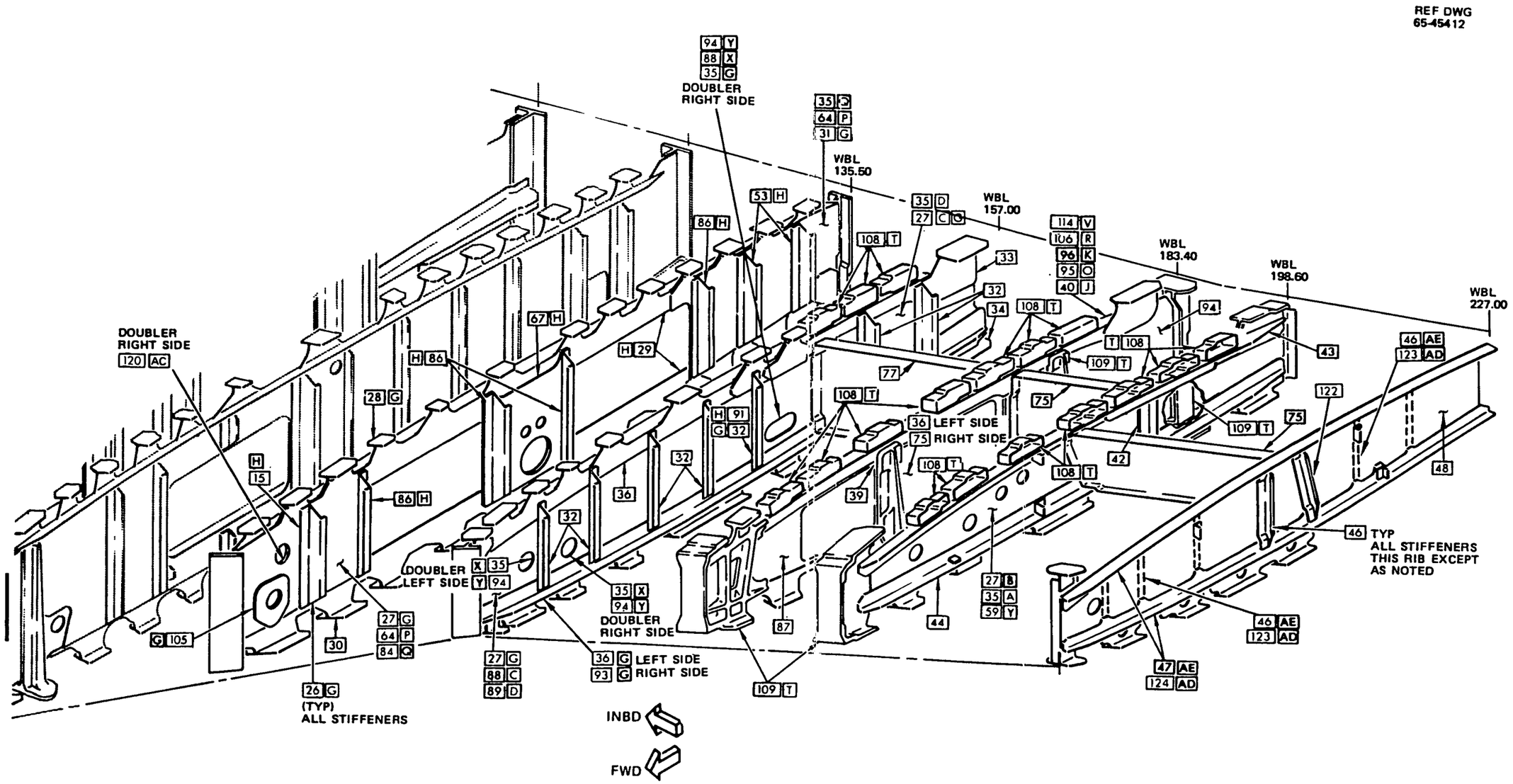

Wing Interspar Structure - Material Identification.
Figure 1 (Sheet 7)

REF DWG
65-45412

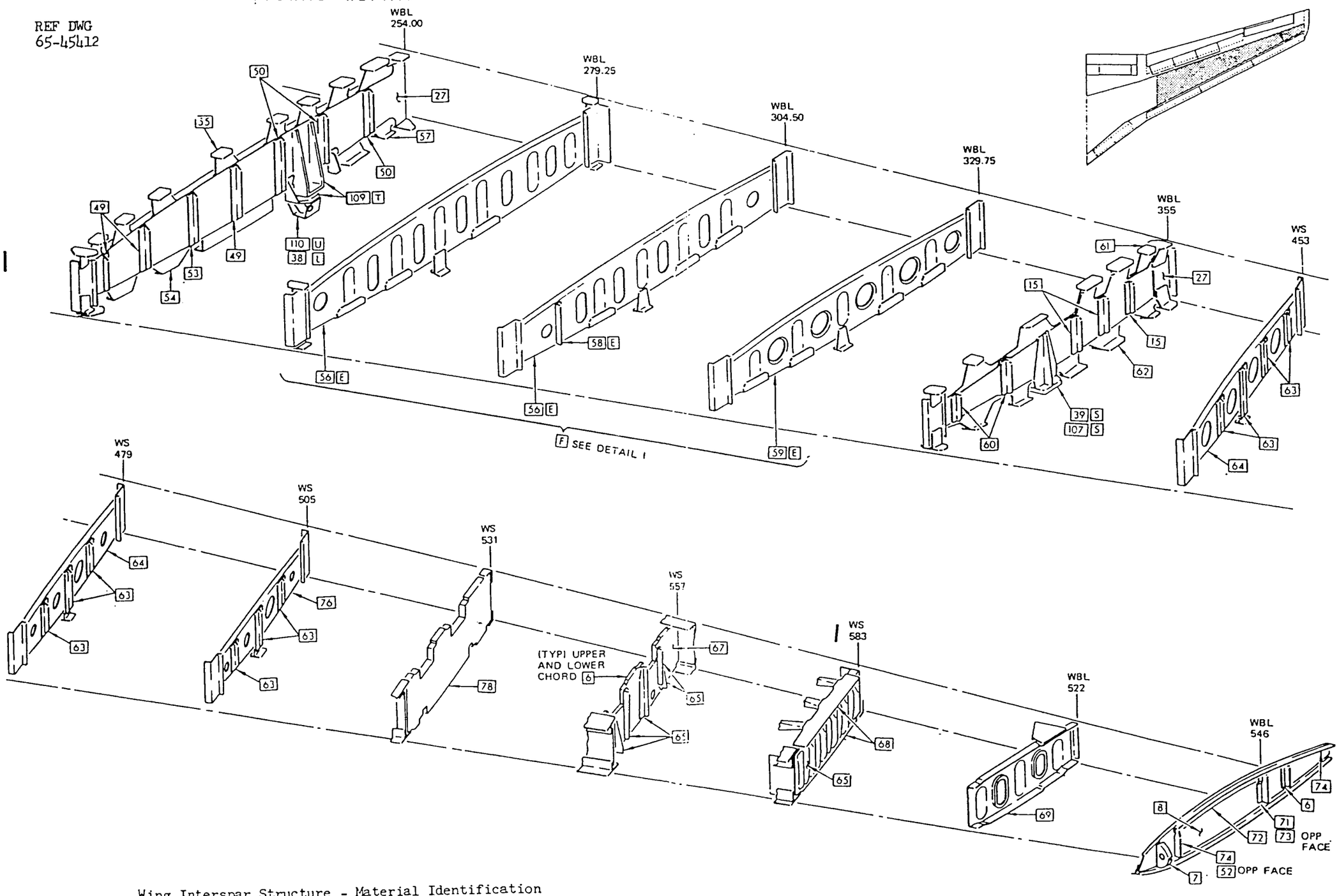

Wing Interspar Structure - Material Identification
Figure 1 (Sheet 8)

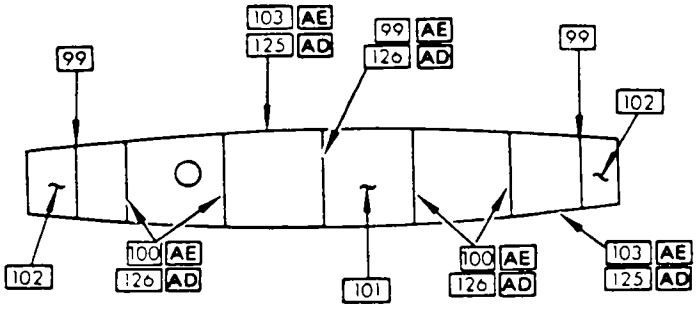

RIB AT WBL 279.25 F

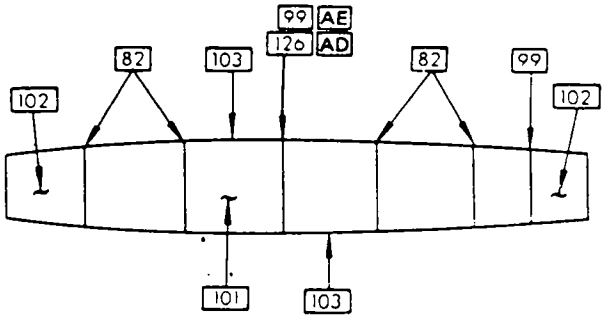

RIB AT WBL 304.50 F

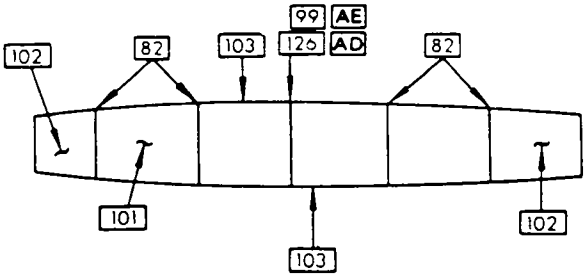

RIB AT WBL 329.75 F

DETAIL I

Wing Interspar Structure - Material Identification
Figure 1 (Sheet 9)

ITEM	MATERIAL	REPAIR FIG. NO.
1	BAC1517-1326 7178-T6511	
2	BAC1506-1663 7178-T6511	
3	BAC1517-1054 7178-T6511	
4	MACHINED FROM 0.250 2024-T3 SH	
5	GLASS FABRIC NO. 181 0.08	
6	BAC1506-1621 7178-T6511	
7	BAC1518-370 7178-T6511	
8	MACHINED FROM 0.250 2024-T351	
9	GLASS FABRIC	
10	BAC1514-1660 7178-T6511	
11	BAC1517-1472 7178-T6511	
12	AND10137-2401 7178-T6511	
13	0.200 AL SH 2024-T3	
14	BAC1493-83 7075-T6 CL SH	
15	BAC1514-1661 2024-T3511	
16	0.125 AL SH 2024-T4	

ITEM	MATERIAL	REPAIR FIG. NO.
17	BAC1514-1664 2024-T42	
18	0.312 2024-T351	
19	BAC1517-1473 7178-T6	
20	BAC1506-1726 7178-T6	
21	BAC1506-1727 7178-T6	
22	BAC1517-1475 7178-T6	
23	BAC1517-1495 7178-T6511	
24	BAC1504-100241 7178-T6511	
25	BAC1506-1816 7178-T6511	
26	BAC1517-1474 7178-T6	
27	BAC1506-1837 7178-T6511	
28	BAC1514-1662 7178-T6511	
29	0.125 AL SH 2024-T3	
30	BAC1514-1663 2024-T3511	
31	BAC1489-285 2024-T3	
32	BAC1506-1748 2024-T42	

Wing Center Section Structure Identification
Figure 2 (Sheet 1)

ITEM	MATERIAL	REPAIR FIG. NO.
33	AND10138-1402 2024-T3511	
34	AND10133-0601 7075-T6	
35	AND10136-3001 7075-T6511	
36	BAC1505-39042 7075-T6511	
37	BAC1490-2749 2024-T42	
38	0.063 AL SHEET 2024-T3	
39	AND10133-0601 2024-T4	
40	BAC1489-285 2024-T3	
41	AND10138-1401 2024-T3511	
42	AND10136-1403 2024-T3511	
43	BAC1517-1071 7178-T6511	
44	BAC1506-1583 7178-T6	
45	BAC1506-1622 7178-T6	
46	BAC1518-369 7178-T6	
47	BAC1518-372 7178-T6	
48	FORGING 7079-T6511	

ITEM	MATERIAL	REPAIR FIG. NO.
49	FORGING 7075-T7311	
50	BAC1514-1662 7075-T73511 EXTRUSION	
51	BAC1510-789 2024-T3511 EXTRUSION	
52	BAC1514-1660 7075-T73511 EXTRUSION	
53	BAC1510-788 2024-T3511 EXTRUSION	
54	DELETED	
55	DELETED	
56	DELETED	
57	DELETED	
58	DELETED	
59	DELETED	
60	DELETED	
61	CHANNEL 0.063 2024-T42	
62	GUSSET 0.125 2024-T3	
63	GUSSET 0.080 2024-T3	
64	STRAP 0.032 2024-T3	
65	DOUBLER 0.032 2024-T3	
66	GUSSET 0.063 2024-T3	

Wing Center Section Structure Identification
Figure 2 (Sheet 2)

ITEM	MATERIAL	REPAIR FIG. NO.
67	DOUBLER 0.050 2024-T3	
68	DOUBLER 0.050 2024-T42	
69	ANGLE 0.071 CLAD 7075-T6	

ITEM	MATERIAL	REPAIR FIG. NO.
70	AND10137-2402 7178-T6511	
71	BAC1506-1831 7178-T6511	
72	BAC1493-188 CLAD 7075-T6	

NOTES

[A] FOR CUM LINE NUMBERS:
1 THRU 15

[B] FOR CUM LINE NUMBERS:
1 THRU 27, 29, 32, 41

[C] FOR CUM LINE NUMBERS:
28, 30, 31, 33 THRU 40, 42 AND ON

[D] FOR CUM LINE NUMBERS:
1 THRU 224, 226 THRU 240, 242, 243, 245, 248 THRU 253, 257, 260, 261, 263 THRU 265, 267, 274, 276

[E] FOR CUM LINE NUMBERS:
225, 241, 244, 246, 247, 254 THRU 256, 258, 259, 262, 266, 268 THRU 273, 275, 277 AND ON

[F] FOR CUM LINE NUMBERS:
1 THRU 310

[G] FOR CUM LINE NUMBERS:
311 AND ON

[H] DELETED

[I] SEE 53-10-2 FOR STA 663.75 BULKHEAD STRUCTURAL IDENTIFICATION

[J] FORGINGS OF 7079-T6511 MATERIAL HAVE BEEN REPLACED BY FORGINGS OF 7075-T7311 IN PRODUCTION: 7075-T7311 FORGINGS ARE RECOMMENDED WHEN EXISTING STOCKS OF 7079-T6511 ARE EXHAUSTED

[K] FOR AIRPLANES WITH SB 57-1070 INCORPORATED. THE PRODUCTION GUSSET [29] IS CUT OUT BELOW THE WING REAR SPAR AND LOWER PORTION DISCARDED. THE VERTICAL LEG OF SEAL ANGLE [31] OUTBOARD OF BBL 54 IS TRIMMED TO FREE BULKHEAD FROM WING. NEW GUSSET IS SAME MATERIAL AS [29] TO REPLACE DISCARDED PORTION AND CHANNEL [61] INSTALLED

[L] FOR CUM LINE NUMBERS:
312 AND ON

[M] FOR CUM LINE NUMBERS:
1 THRU 310 AFTER INCORPORATION OF SB 57-1070

[N] FOR ALL CARGO AIRPLANES THRU CUM LINE NUMBER 311 AFTER INCORPORATION OF PREVENTIVE MODIFICATION IN SB 57-1115

[P] FOR 737-100 AND 737-200 BASIC GROSS WEIGHT PASSENGER AIRPLANES AFTER INCORPORATION OF PREVENTIVE MODIFICATION IN SB 57-1122

Wing Center Section Structure Identification
Figure 2 (Sheet 3)

REF DWG
65-45411

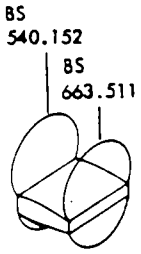

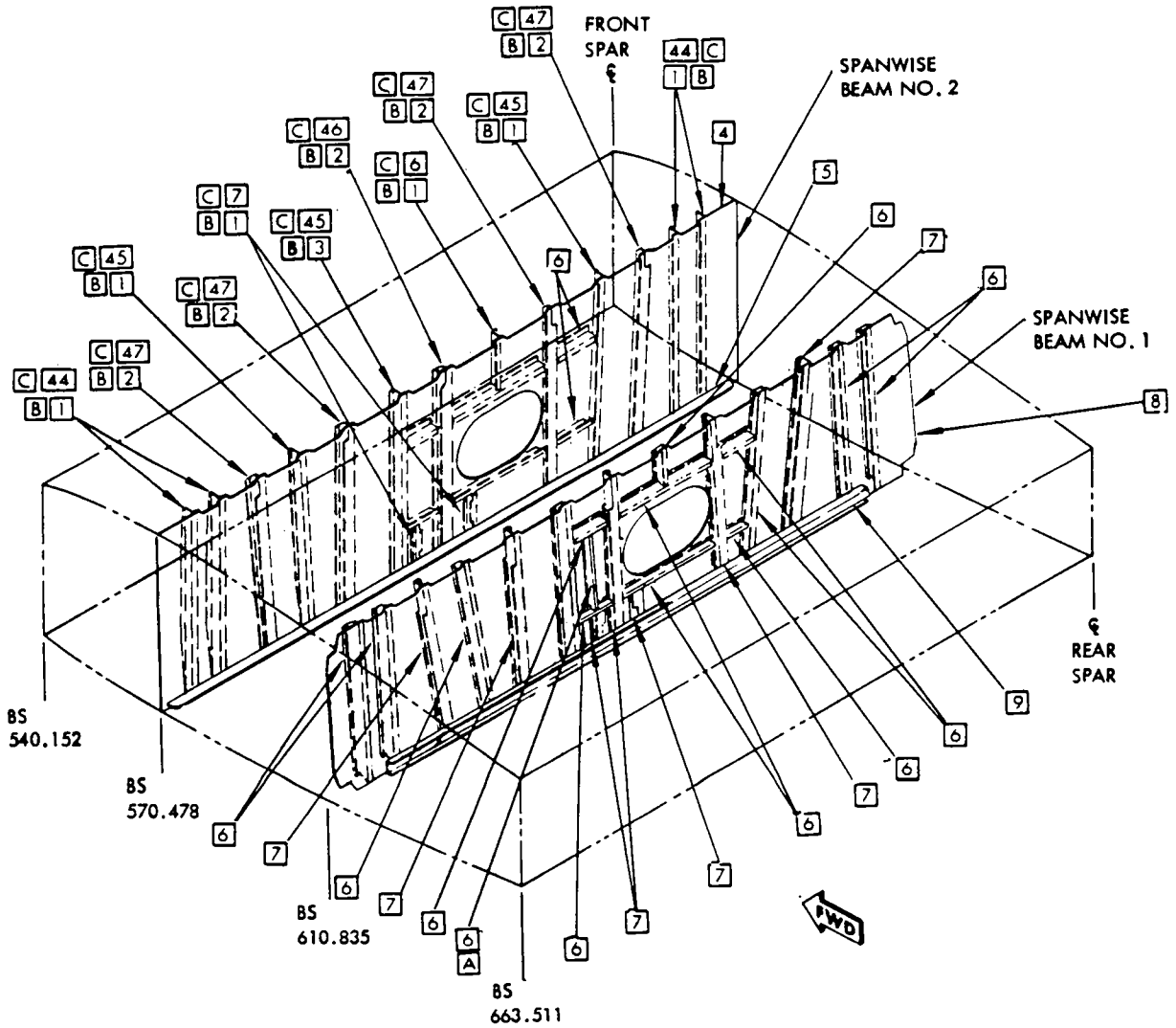

WING CENTER SECTION

Wing Center Section Structure Identification
Figure 2 (Sheet 4)

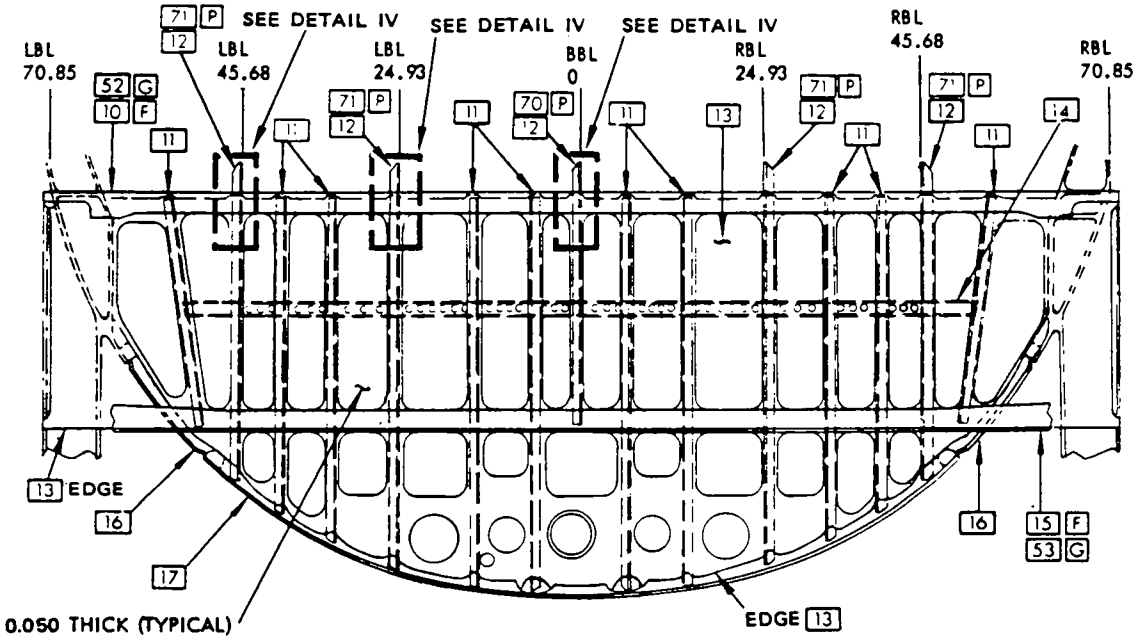

REAR VIEW - FRONT SPAR CENTER SECTION

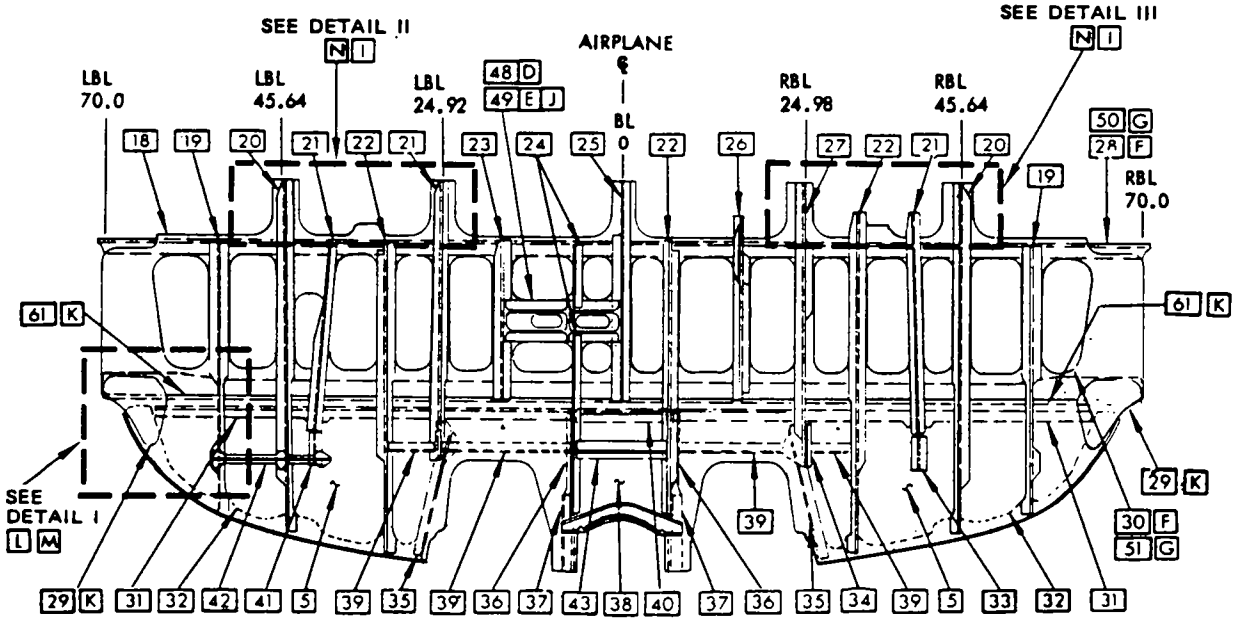

REAR VIEW - REAR SPAR CENTER SECTION

Wing Center Section Structure Identification
Figure 2 (Sheet 5)

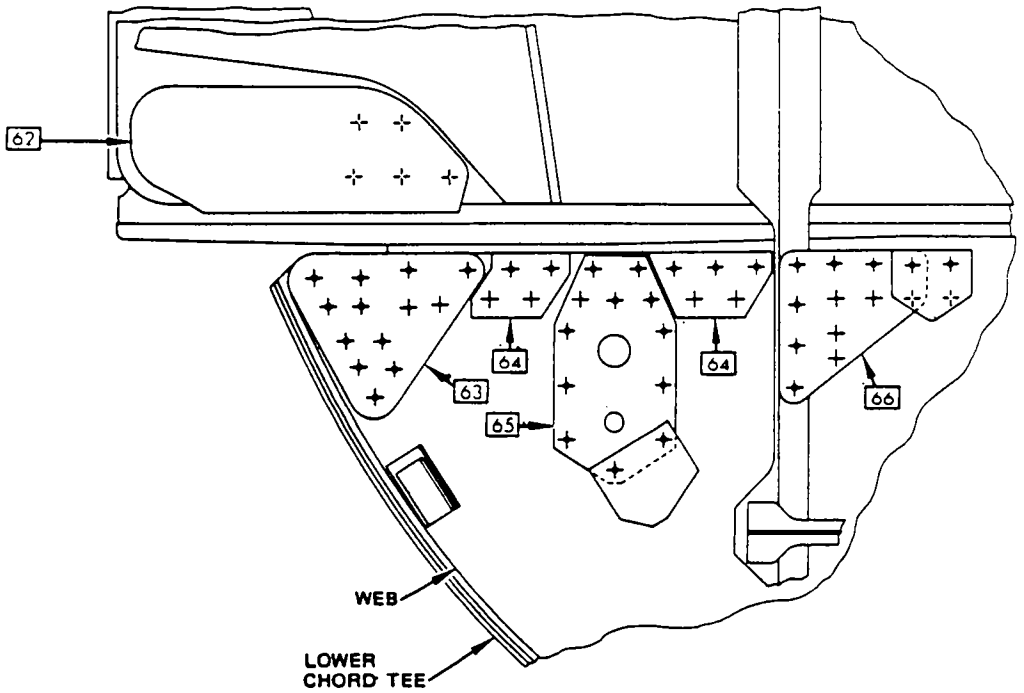

DETAIL I

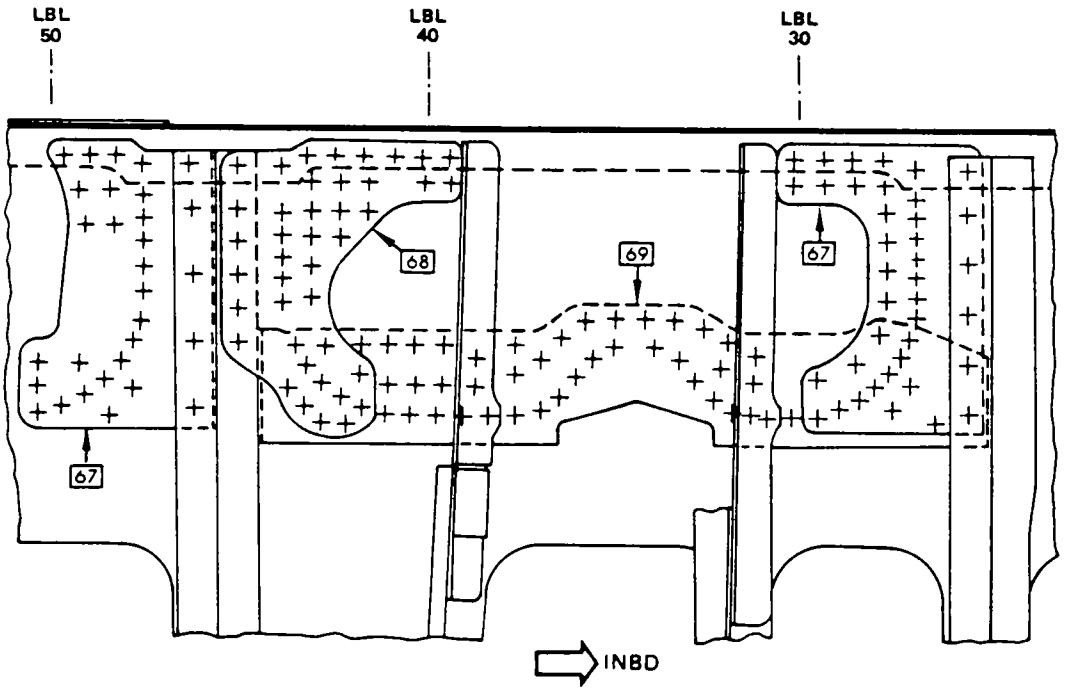

DETAIL II [N] [I]

Wing Center Section Structure Identification
Figure 2 (Sheet 6)

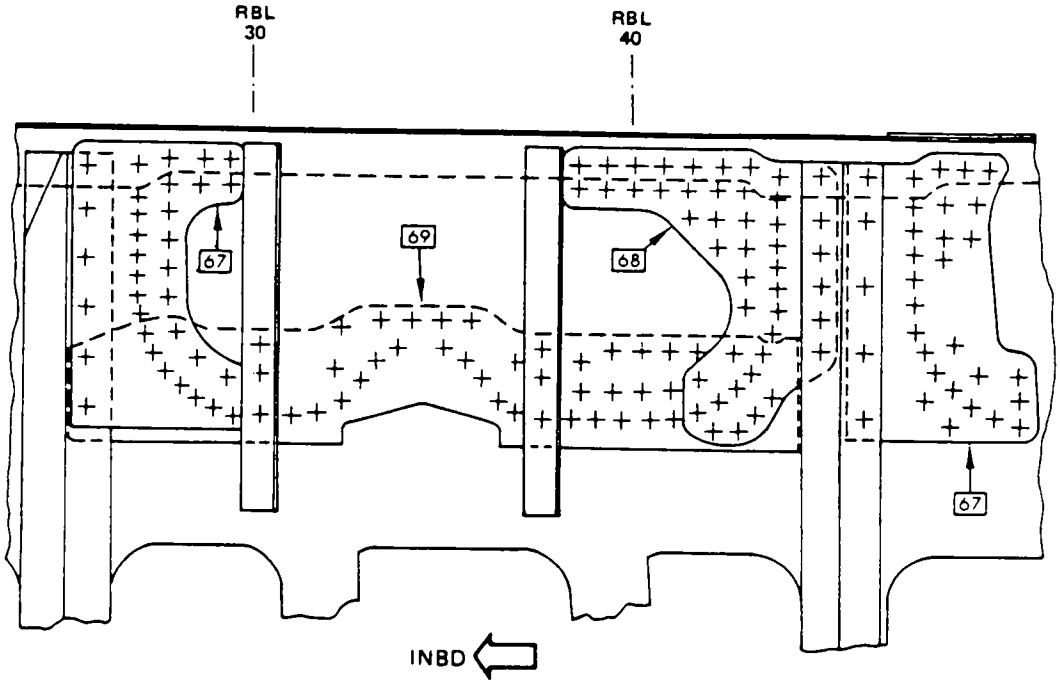

DETAIL III N 1

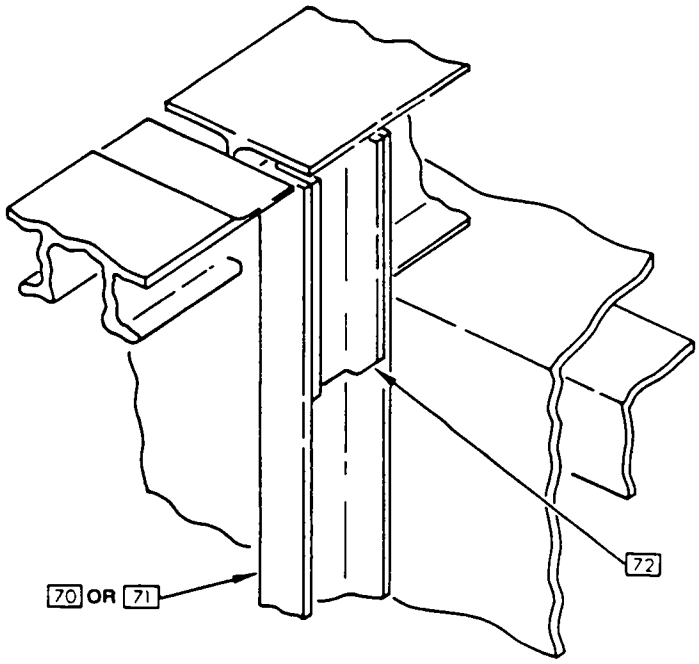

DETAIL IV P

Wing Center Section Structure Identification
Figure 2 (Sheet 7)

ITEM	MATERIAL	REPAIR FIG. NO.
1	BAC1506-2006 7178-T6511	
2	BAC1506-2007 2024-T3511	
3	BAC1517-316 7178-T6511	
4	BAC1514-1735 7178-T6511	
5	AND10139-1404 7178-T6511	
6	BAC1506-1756 7178-T6511	
7	BAC1506-1832 7178-T6511	
8	BAC1510-350 7178-T6511	
9	BAC1517-1370 7178-T6511	
10	BAC1517-1068 7178-T6511	
11	BAC1506-1755 7178-T6511	
12	BAC1503-100234 7178-T6511	
13	BAC1510-495 7178-T6511	
14	BAC1507-48724 2024-T3511	
15	BAC1517-1483 7178-T6511	

ITEM	MATERIAL	REPAIR FIG. NO.
16	AND10134-1201 7178-T6511	
17	BAC1505-100591 2024-T3511	
18	BAC1503-100144 7178-T6511	
19	0.063 CLAD 2024-T42	
20	0.063 CLAD 2024-T3	
21	BAC1517-1482 7178-T6511	
22	BAC1503-100233 7178-T6511	
23	MACHINE FROM 0.340 2024-T351	
24	AND10138-1206 2024-T4	
25	BAC1506-1757 7178-T6	
26	BAC1514-1807 7178-T6511 R	
27	BAC1514-1808 2024-T3511 T	
28	AND10138-1204 2024-T4	
29	BAC1506-1896 2024-T3511	
30	BAC1506-1758 2024-T4	

Wing Front and Rear Spar Structural Identification
Figure 3 (Sheet 1)

ITEM	MATERIAL	REPAIR FIG. NO.
31	7075-T73 FORGING	
32	BAC1514-1627 2024-T4	
33	BAC1503-100187 7075-T6511	
34	7079-T6 FORGING	
35	TRACK SUPPORT FITTING 7075-T73 [L] FORGING	
36	BAC1506-1759 7178-T6	
37	AND10138-1010 2024-T4	
38	AND10136-1703 2024-T4	
39	BAC1509-100258 2024-T3511	
40	BAC1517-1484 7178-T6	
41	BAC1510-496 7178-T6	
42	BAC1517-1423 OPTIONAL AND10138-1204 2024-T4	
43	AND10139-1007 2024-T4	
44	BAC1517-1409 7178-T6	
45	AND10133-1002 2024-T4	
46	AND10133-1001 2024-T4	
47	BAC1514-1454 2024-T4	
48	BAC1514-1539 2024-T4	
49	BAC1514-1540 2024-T4	
50	BAC1490-2521 CLAD 2024-T4	
51	MACHINE FROM 0.39 2024-T351 [S]	
52	0.050 CLAD 2024-T4	
53	0.050 CLAD 2024-T3	
54	AND10134-1404 7178-T6511	
55	AND10134-2005 7075-T6511	
56	AND10134-2004 7178-T6511	
57	AND10134-1405 7075-T6511	
58	MACHINED FROM 2024-T351 BAR	
59	AND10134-2402 7075-T6511	
60	AND10134-1408 7075-T6511	

Wing Front and Rear Spar Structural Identification
Figure 3 (Sheet 2)

ITEM	MATERIAL	REPAIR FIG. NO.
61	AND10134-1604 7075-T6511	
62	AND10134-2004 7075-T6511	
63	MACHINED FROM 0.50 2024-T351	
64	BAC1503-100449 OPT BAC1518-430 7178-T6511	
65	AND10138-1206 2024-T3511	
66	BAC1517-1052 7178-T6	
67	BAC1518-380 7178-T6	
68	0.063 2024-T3	
69	0.050 2024-T42	
70	0.050 7075-T6	
71	0.063 7075-T6	
72	0.063 2024-T32	
73	ACTUATOR SUPPORT FITTING FORGING 7075-T73	
74	INBOARD LANDING GEAR FITTING FORGING 7075-T73	
75	ENGINE FAIRING SUPPORT FITTING FORGING 7075-T73	

ITEM	MATERIAL	REPAIR FIG. NO.
76	UPPER CHORD BAC1514-2314 7075-T73511 EXTRUSION	
77	UPPER CHORD BAC1506-2005 7075-T73511 EXTRUSION	
78	TERMINAL FITTING MACHINE FROM 7075-T73 FORGING	
79	PUMP SUPPORT ASSY 356-T6 CASTING	
80	JUNCTION BOX FITTING 7075-T73 FORGING	
81	DELETED	
82	FRONT SPAR ENGINE SUPPORT FITTING FORGING 7075-T73	
83	REAR SPAR LOWER CHORD SPLICE PLATES 2024-T42 SHOT PEENED	
84	DOUBLER 0.160 2024-T3	
85	DOUBLER 0.125 2024-T3	
86	DOUBLER 0.080 2024-T3	
87	BAC1514-1809 2024-T3511 [T]	
88	BAC1514-2315 2024-T3511	
89	BAC1506-2008 2024-T3511	

Wing Front and Rear Spar Structural Identification
Figure 3 (Sheet 3)

NOTES

[A] FOR CUM LINE NUMBERS:
31 THRU 138, 140 THRU 202, 204 THRU 211, 213 THRU 216, 218 THRU 257, 263, 265, 268, 274, 276, 278, 281, 286, 288, 289, 290, 294, 295, 297 THRU 310

[B] FOR AIRPLANES NOT LISTED IN [A]

[C] FOR CUM LINE NUMBERS:
1, 5, 7

[D] FOR CUM LINE NUMBERS:
33 AND ON

[E] DOUBLER IS PRESENT ONLY ON AIRPLANES HAVING WATER SCAVENGING SYSTEM

[F] FOR CUM LINE NUMBERS:
1 THRU 5, 7, 9 THRU 11, 15, 17, 23, 26, 32, 72, 84, 102, 110, 128, 143, 149, 155, 157, 162, 166, 173, 184, 194, 196, 199, 203, 205, 208, 212, 215, 217, 233, 230, 234, 238, 242, 245, 249, 274, 276

[G] DELETED

[H] FOR CUM LINE NUMBERS:
1 THRU 71, 73 THRU 83, 85 THRU 91

[J] FOR CUM LINE NUMBERS:
1 THRU 32, 36, 37, 42, 48, 55, 58, 59, 62, 63, 65, 69, 71, 74 THRU 76, 85, 86, 120 AND ON

[K] STRUCTURE REWORKED ACCORDING TO SB 737-57-1067

[L] FORGINGS OF 7079-T6 MATERIAL HAVE BEEN REPLACED BY FORGINGS OF 7075-T73 IN PRODUCTION; 7075-T73 FORGINGS ARE RECOMMENDED WHEN EXISTING STOCKS OF 7079-T6 ARE EXHAUSTED

[M] FOR CUM LINE NUMBERS:
1 THRU 310, 323

[N] FOR CUM LINE NUMBERS:
311 THRU 322, 324 AND ON

[P] DELETED

[Q] FOR CUM LINE NUMBERS:
991, 993 THRU 999, 1001 THRU 1006, 1008 THRU 1014, 1016 THRU 1021 (BOEING REF: P4801 THRU P4999, P8971 THRU P9995)

[R] OPTIONAL BAC1514-1665, 7178-T6511

[S] OPTIONAL MACHINE FROM 0.460 2024-T351

[T] OPTIONAL BAC1514-1482, 2024-T3511

[U] FOR CUM LINE NUMBERS:
1 THRU 5, 7, 287, 291 THRU 293, 296, 323

[V] FOR CUM LINE NUMBERS:
72, 84, 102, 110, 128, 143, 155, 157, 158, 162, 164, 166, 173, 184, 194, 196, 199, 203, 205, 208, 212, 215, 217, 223, 225, 230, 234, 242, 245, 249, 251, 254 THRU 256, 263, 265, 268, 274, 276, 278, 281, 286, 288 THRU 290, 294, 295, 297 THRU 310

[W] FOR AIRPLANES NOT LISTED IN [U] OR [V]

[X] FOR CUM LINE NUMBERS:
1 THRU 71, 73 THRU 83, 85 THRU 101, 103 THRU 109, 111 THRU 127, 129 THRU 142, 144 THRU 148, 150 THRU 154, 156, 159 THRU 161, 163, 165, 167 THRU 172, 174 THRU 183, 185 THRU 193, 195, 197, 198, 200 THRU 202, 204, 206, 207, 209 THRU 211, 213, 214, 216, 218 THRU 222, 224, 226 THRU 229, 231 THRU 233, 235 THRU 237, 239 THRU 241, 243, 244, 246 THRU 248, 250, 252, 253, 257 THRU 262, 264, 266, 267, 269 THRU 273, 275, 277, 279, 280, 282 THRU 285, 287, 291 THRU 293, 296, 323 THRU 327, 331, 374, 375, 380, 383

[Y] FOR AIRPLANES NOT LISTED IN [X]

Wing Front and Rear Spar Structural Identification
Figure 3 (Sheet 4)

REF. DWG.
65-45320

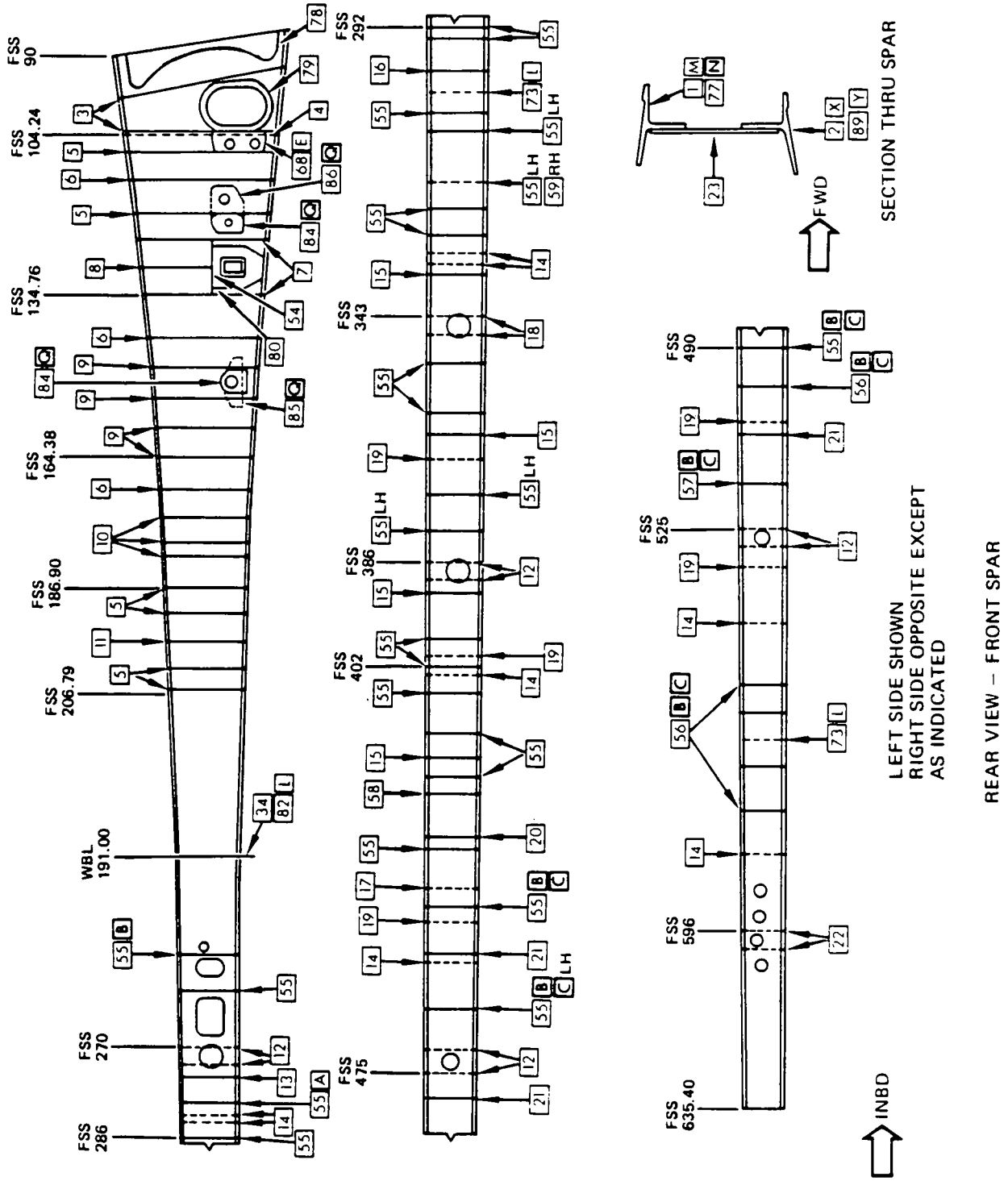

Wing Front and Rear Spar Structural Identification
Figure 3 (Sheet 5)

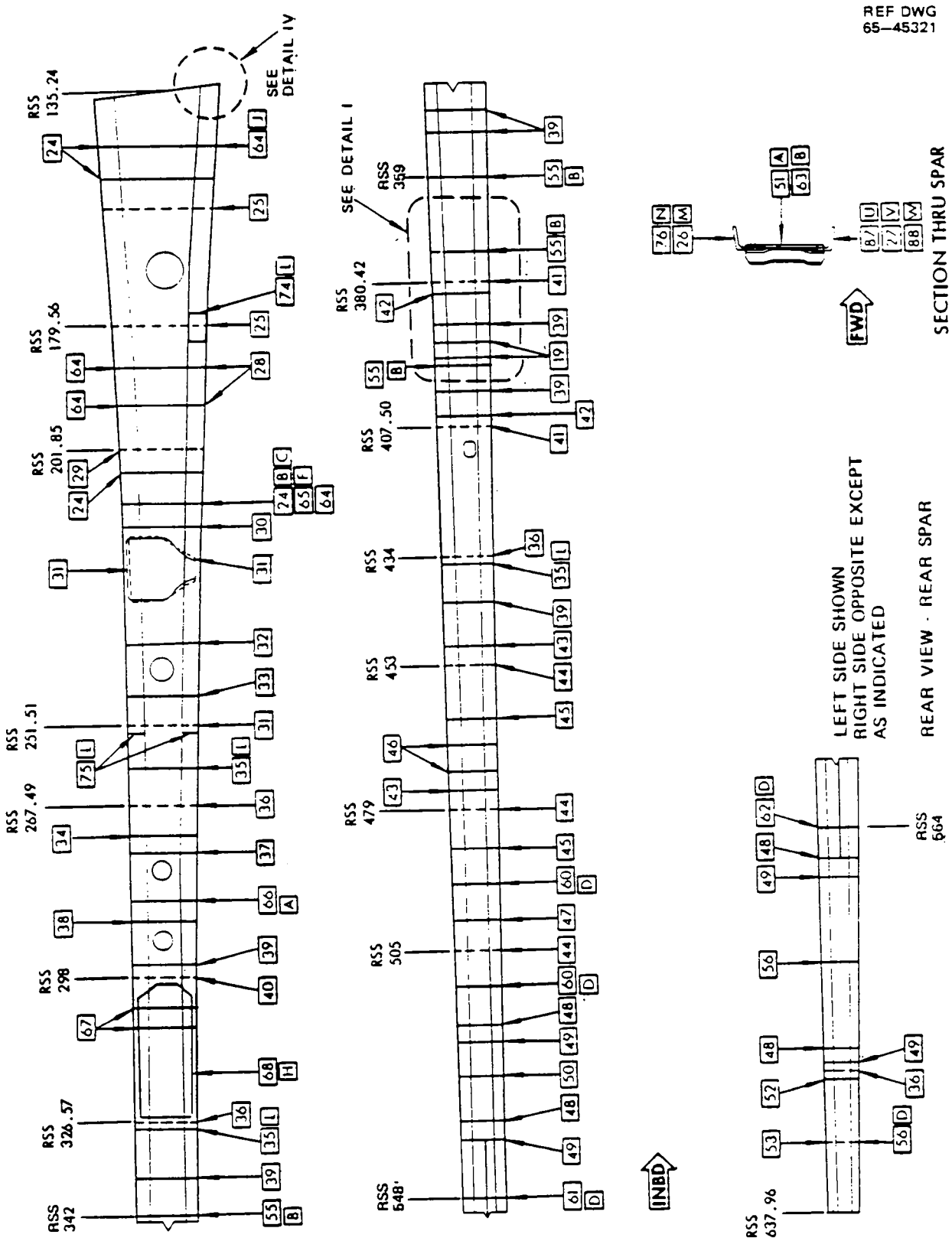

Wing Front and Rear Spar Structural Identification
Figure 3 (Sheet 6)

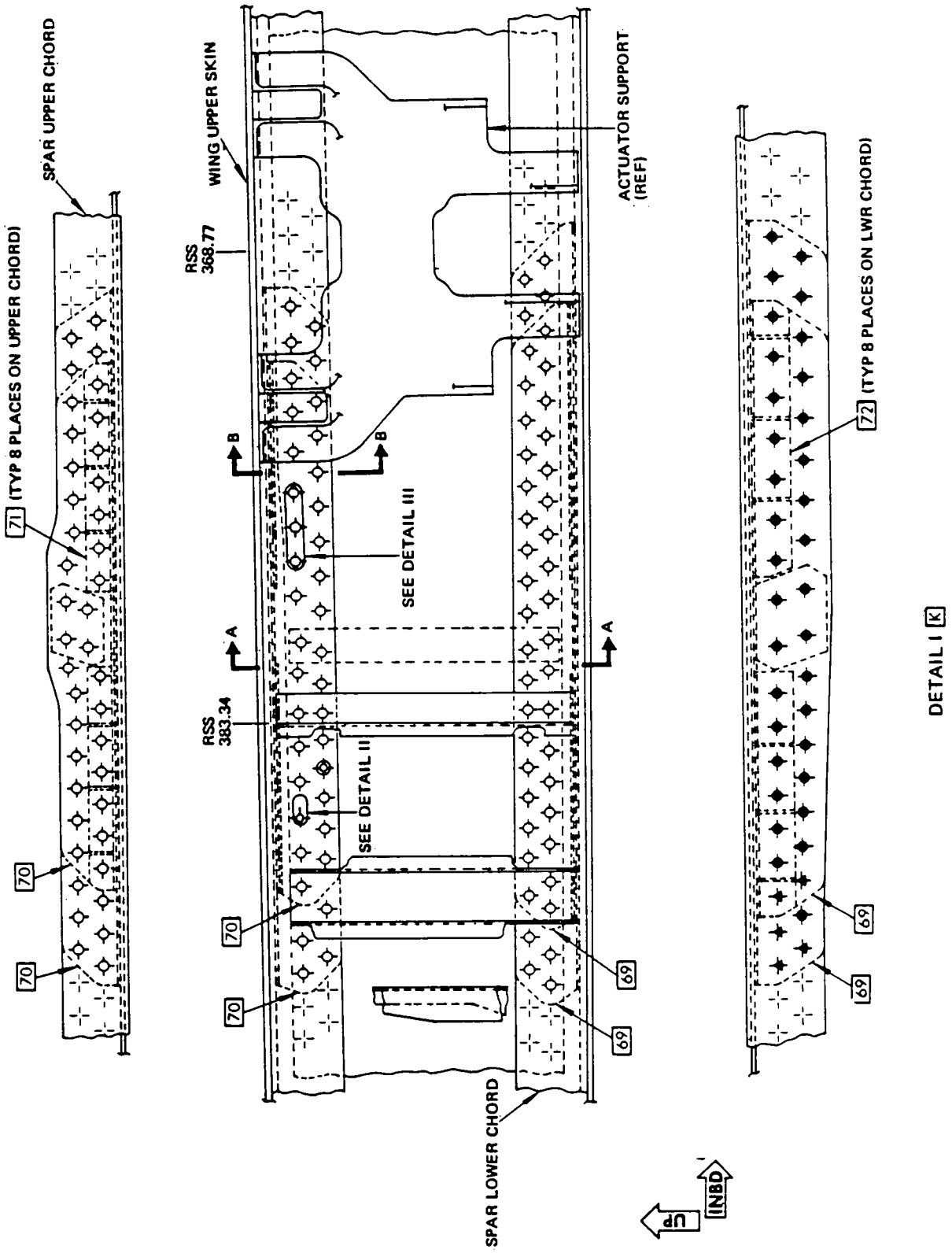

Wing Front and Rear Spar Structural Identification
Figure 3 (Sheet 7)

REF DWG
65-45400

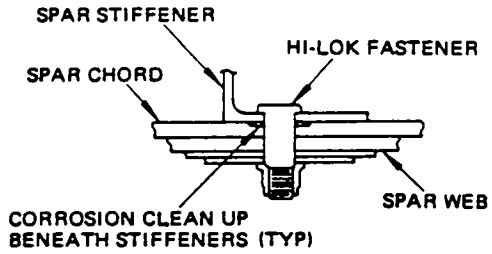

DETAIL II K

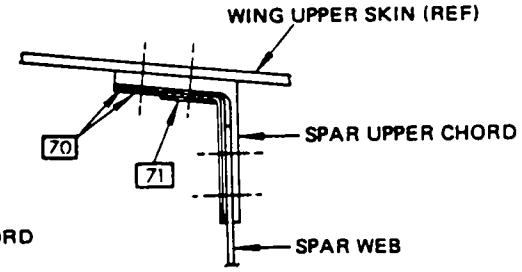

SECTION B–B K

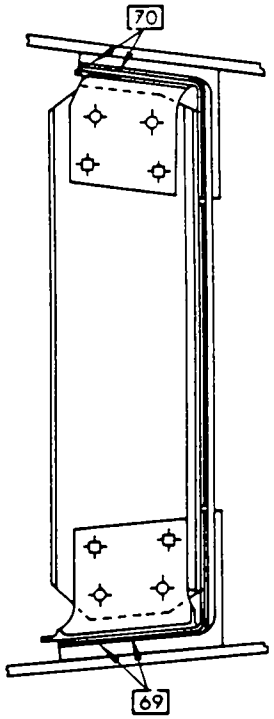

SECTION A–A K

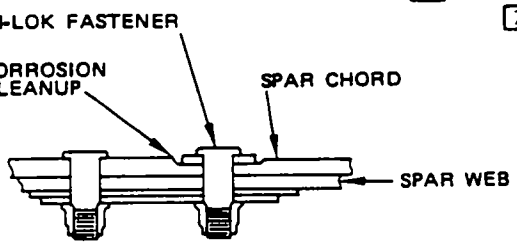

CORROSION CLEANUP AND REPAIR
TO SPAR CHORD

DETAIL III K

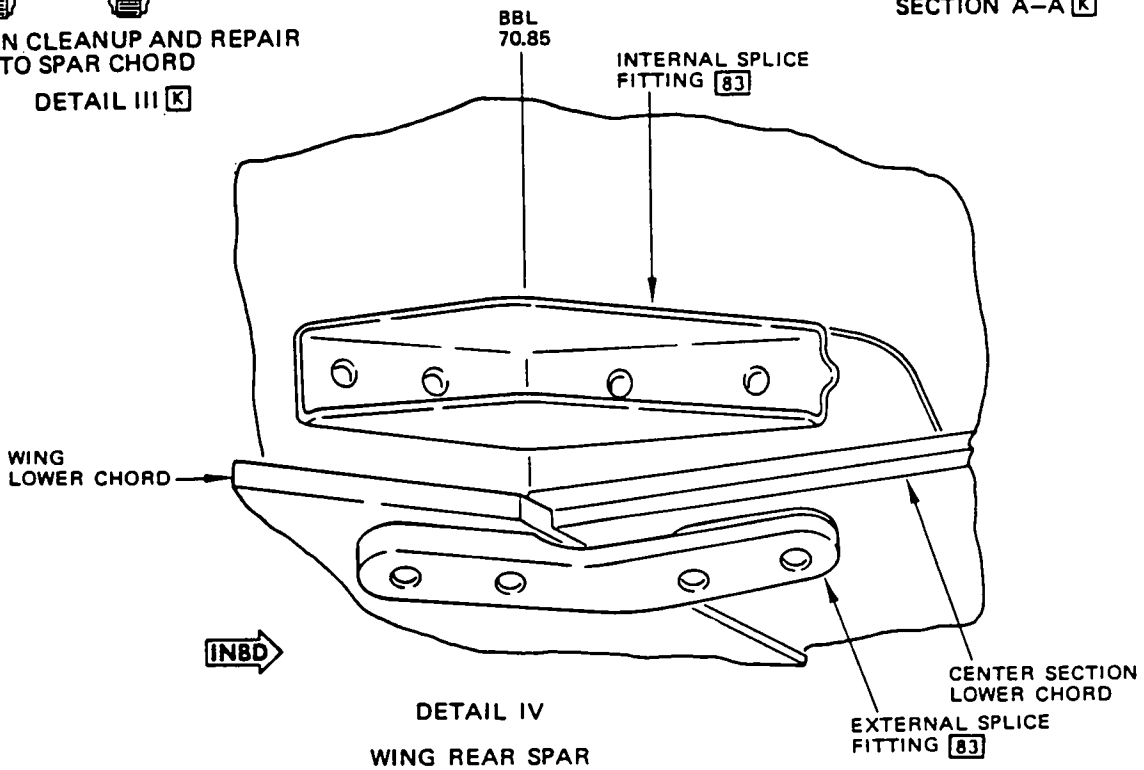

DETAIL IV

WING REAR SPAR
LOWER CHORD SPLICE
LEFT WING SHOWN
RIGHT WING OPPOSITE

Wing Front and Rear Spar Structural Identification
Figure 3 (Sheet 8)

ITEM	MATERIAL	REPAIR FIG. NO.
1	BAC1518-396 7178-T6511	57-10-4 FIG. 1
2	BAC1518-401 7178-T6511	57-10-4 FIG. 1
3	BAC1510-491 7178-T6511	57-10-4 FIG. 2
4	BAC1510-486 7178-T6511	57-10-4 FIG. 2
5	BAC1518-409 7178-T6511	57-10-4 FIG. 3
6	AND10137-2407 7075-T6	
7	BAC1506-1740 7178-T6511	57-10-4 FIG. 4,8 AND 9
8	BAC1506-1724 7178-T6511	57-10-4 FIG. 4
9	BAC1506-1746 7178-T6511	57-10-4 FIG. 4
10	BAC1517-1469 2024-T3511	57-10-4 FIG. 5,6
11	BAC1506-1479 2024-T3511	57-10-4 FIG. 7
12	BAC1510-484 2024-T3511	
13	BAC1506-1983 2024-T3511	57-10-4 FIG. 7
14	BAC1506-1709 2024-T3511	57-10-4 FIG. 7
15	BAC1505-100549 2024-T3511	
16	BAC1517-1514 2024-T3511	57-10-4 FIG. 5,6

ITEM	MATERIAL	REPAIR FIG. NO.
17	BAC1517-1514 OPTIONAL BAC1517-1480 2024-T3511	57-10-4 FIG. 5,6
18	BAC1517-1538 2024-T3511	57-10-4 FIG. 5,6
19	BAC1517-1514 OPTIONAL BAC1517-1493 2024-T3511	57-10-4 FIG. 7
20	BAC1506-1929 OPTIONAL BAC1506-1795 2024-T3511	57-10-4 FIG. 5,6
21	BAC1506-1752 2024-T3511	57-10-4 FIG. 7
22	BAC1518-430 7178-T6511	
23	BAC1503-100246 OPTIONAL BAC1518-409 7178-T6511	
24	BAC1518-551 7178-T6511	57-10-4 FIG. 8,9
25	STABILIZATION STRAP BAC1520-1795 7075-T6511	
26	SHEAR TIE 0.063 7075-T6	
27	CLIP AND10134-1003 7075-T6511	
28	STIFFENER BAC1510-990 7075-T6511	
29	STRINGER BAC1506-2769 7075-T6511	

Wing Interspar Stiffeners Identification
Figure 4 (Sheet 1)

ITEM	MATERIAL	REPAIR FIG. NO.
30	STRINGER BAC1506-2769 7075-T6511	
31	STRINGER BAC1510-488 7178-T6511	
32	STRINGER BAC1505-100861 2024-T3511 OR BAC1505-10034 2024-T3511	
33	STRINGER BAC1506-3070 2024-T3511	
34	STRINGER BAC1506-1740 7178-T6511	
35	BAC1506-1986 2024-T3511	
36	BAC1506-1795 2024-T3511	
37	BAC1517-1512 OPTIONAL 1517-1494 2024-T3511	
38	BAC1517-1539 2024-T3511	
39	BAC1517-1513 OPTIONAL 1506-1752 1506-1517 1506-1480 2024-T3511	
40	BAC1517-1540 2024-T3511	
41	BAC1517-1513 OPTIONAL 1517-1480 1517-1540 2024-T3511	

ITEM	MATERIAL	REPAIR FIG. NO.
42	ANGLE 0.071 7075-T6	
43	SPLICE ANGLE 0.071 7075-T6	
44	ANGLE 0.080 7075-T6	
45	SPLICE ANGLE 0.080 7075-T6	

Wing Interspar Stiffeners Identification
Figure 4 (Sheet 2)

NOTES

[A] FOR CUM LINE NUMBERS:
1 THRU 11

[B] FOR CUM LINE NUMBERS:
12 AND ON

[C] FOR CUM LINE NUMBERS:
1 THRU 220, 222, 223

[D] FOR CUM LINE NUMBERS:
221, 224 AND ON

[E] FOR CUM LINE NUMBERS:
95, 96, 111, 131, 135 THRU 142, 144 THRU 148, 150 THRU 152, 154 THRU 156, 159 THRU 161, 163, 165, 167 THRU 172, 174 THRU 183, 185 THRU 193, 195, 197 THRU 202, 204, 206 THRU 211, 213 THRU 216, 218 THRU 222, 224 THRU 229, 231 THRU 233, 235 THRU 237, 239 THRU 241, 243 THRU 248, 250 THRU 253, 257 THRU 262, 264, 266 THRU 273, 275, 277, 279, 280, 282 THRU 285, 287 AND ON

[F] FOR CUM LINE NUMBERS:
1 THRU 310

[G] FOR CUM LINE NUMBERS:
311 AND ON

[H] FOR ALL AIRPLANES ON WHICH SB 57-1051 HAS BEEN INCORPORATED

[J] DELETED

[K] FOR CUM LINE NUMBERS:
1 THRU 26 WITH SB 57-1088 INCORPORATED

[L] FOR ALL AIRPLANES EXCEPT THOSE WITH SB 57-1088 INCORPORATED

[M] ON AIRPLANES WITH SB 57-1105 INCORPORATED

[N] FOR AIRPLANES WITH CERTIFIED GROSS WEIGHT OF 125,000 LBS

[O] FOR ALL AIRPLANES EXCEPT THOSE LISTED IN [N]

[P] FOR CUM LINE NUMBERS:
72 THRU 266, 268 THRU 514 AND ON

[Q] FOR CUM LINE NUMBERS:
73 THRU 83, 85 THRU 101, 103 THRU 109, 111 THRU 127, 129 THRU 142, 144 THRU 148, 150 THRU 154, 156, 159 THRU 161, 163, 165, 167 THRU 172, 174 THRU 183, 185 THRU 193, 195, 197, 198, 200, 201, 202, 204, 206, 207, 209, 210, 211, 213, 214, 216, 218 THRU 222, 224, 226, 227, 228, 229, 231, 233, 235, 236, 237, 239, 240, 241

[R] FOR CUM LINE NUMBERS:
72, 84, 102, 110, 128, 143, 149, 155, 157, 158, 162, 164, 166, 173, 184, 194, 196, 199, 203, 205, 208, 212, 215, 217, 223, 225, 230, 234, 238, 242, 245, 249, 251, 254, 255, 256, 263, 265, 268, 274, 276, 278, 281, 286, 288, 289, 290, 294, 295, 297 THRU 322, 326, 328, 329, 330, 332 THRU 351, 353 THRU 363, 365 THRU 373, 376 THRU 379, 381, 382, 384 THRU 406, 408 THRU 712, 715 THRU 775, 777 THRU 814 AND ON

[S] FOR CUM LINE NUMBERS:
1 THRU 71, 73 THRU 83, 85 THRU 101, 103 THRU 109, 111 THRU 127, 129 THRU 142, 144 THRU 148, 151, 152, 153, 154, 156, 159, 160, 161, 163, 165, 167 THRU 172, 174 THRU 183, 185 THRU 193, 195, 197, 198, 201, 202, 204, 206, 207, 209, 210, 211, 213, 214, 216, 218 THRU 222, 224, 226, 227, 228, 229, 231, 232, 233, 235, 236, 237, 239, 240, 241, 243, 244, 246, 247, 248, 250, 252, 253, 257 THRU 262, 264, 266, 269, 270 THRU 273, 275, 277, 279, 280, 282 THRU 285, 287, 291, 292, 293, 296, 323, 324, 325, 327, 331, 374, 375, 380, 383

Wing Interspar Stiffeners Identification
Figure 4 (Sheet 3)

NOTES (CONT)

[T] FOR CUM LINE NUMBERS:
560, 572, 578, 581, 584, 590, 597, 600, 603, 605, 608, 610, 612, 614, 618, 620, 621, 623, 625, 629, 631, 652, 666, 672, 692, 697, 699, 701, 707, 709, 711, 718, 723, 725, 729, 733, 737, 740, 750, 754, 757, 759, 763, 767, 771, 773, 799, 804, 807, 810

[U] FOR AIRPLANES WITH CERTIFIED GROSS WEIGHT OF 110,000 LBS

[V] FOR AIRPLANES WITH SB 57-1194 PREVENTIVE MODIFICATION INSTALLED, REFER TO DETAIL XI

Wing Interspar Stiffeners Identification
Figure 4 (Sheet 4)

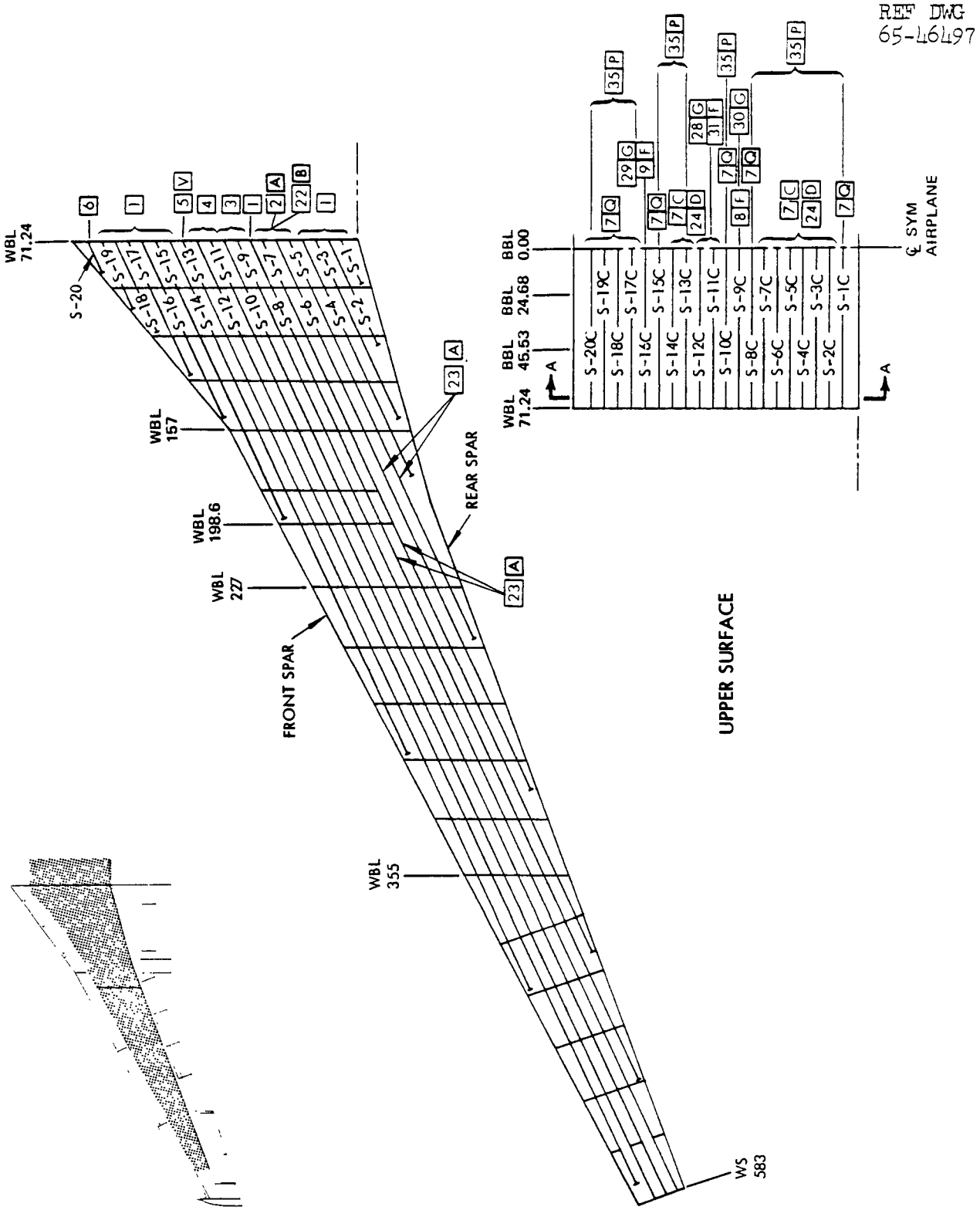

Wing Interspar Stiffeners Identification
Figure 4 (Sheet 5)

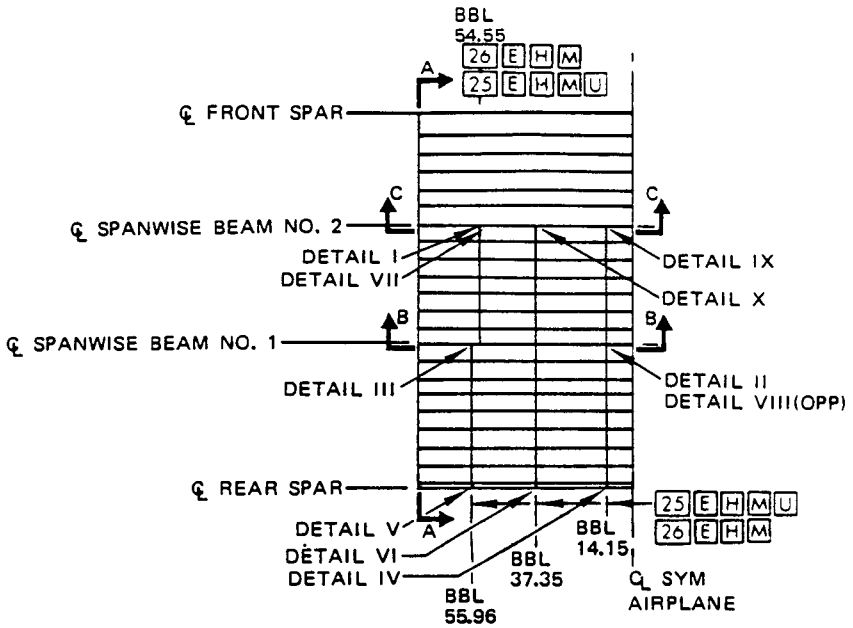

STABILIZATION STRAPS
LOWER SURFACE OF WING CENTER
SECTION UPPER PANEL STRINGERS

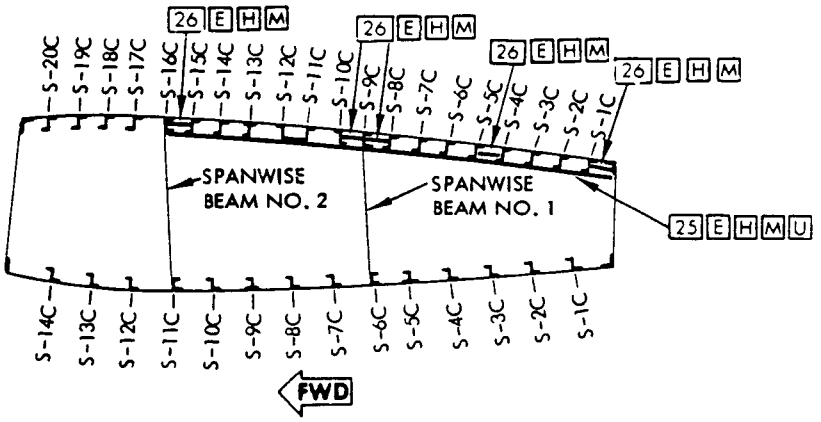

SECTION A–A

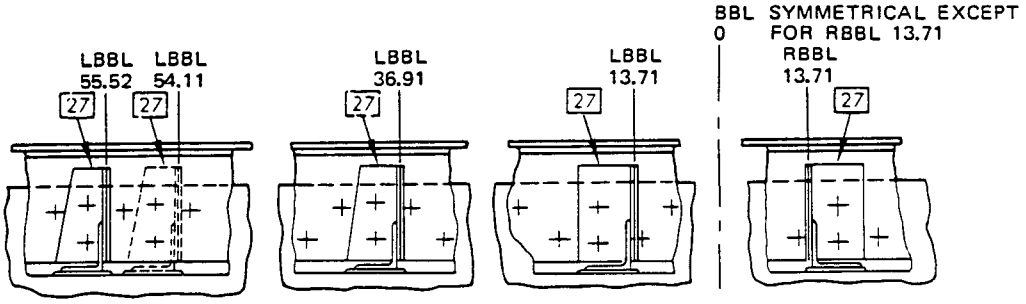

SECTION B–B H

REAR VIEW SPANWISE BEAM NO. 1

Wing Interspar Stiffeners Identification
Figure 4 (Sheet 6)

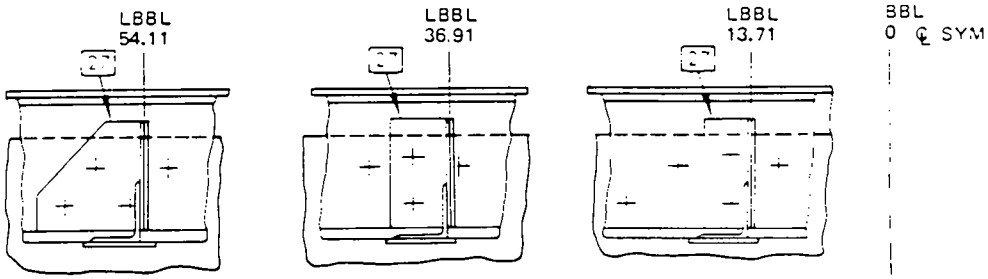

SECTION C–C [H]

REAR VIEW SPANWISE BEAM NO. 2

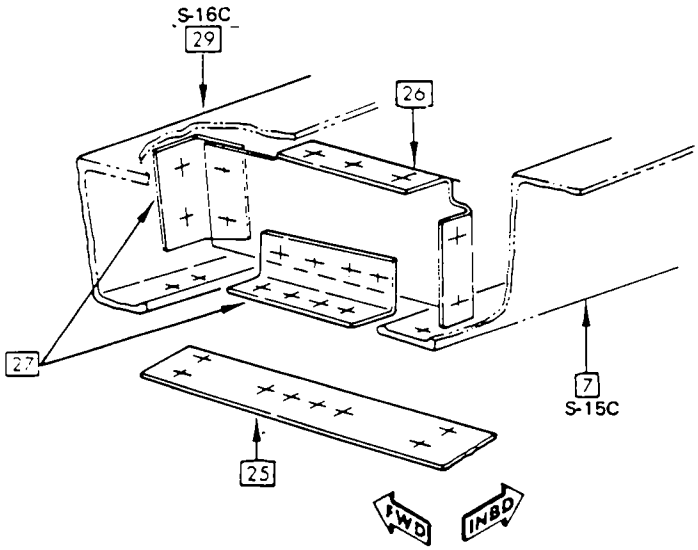

DETAIL I [H]

SPANWISE BEAM NO. 2 STRAP AND SHEAR TIE INSTALLATION

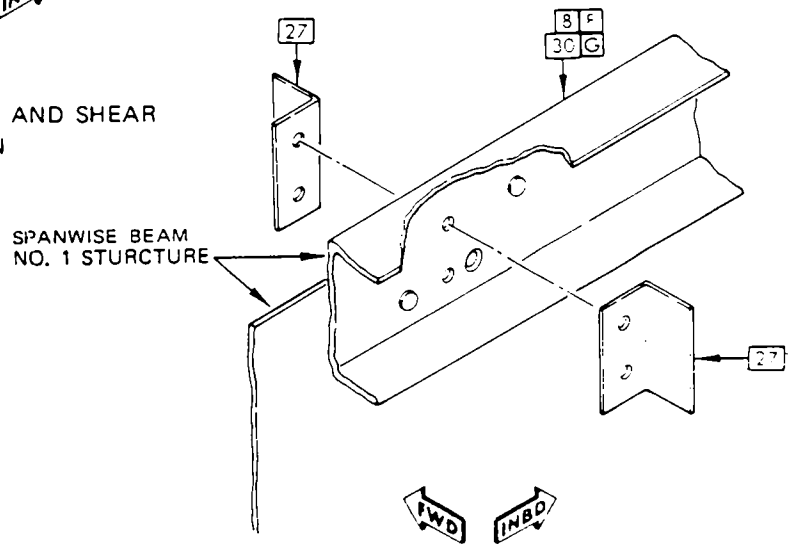

DETAIL II [H]
SPANWISE BEAM NO. 1 CLIP
INSTALLATION
LBBL 13.71

Wing Interspar Stiffeners Identification
Figure 4 (Sheet 7)

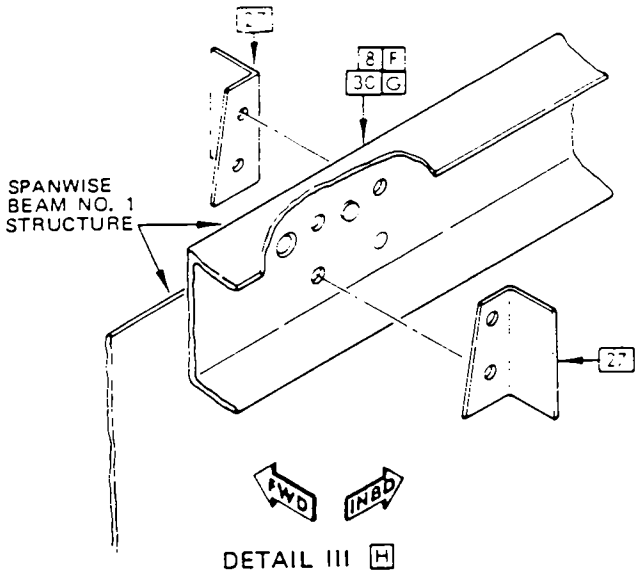

DETAIL III [H]

SPANWISE BEAM NO. 1 CLIP INSTALLATION LBBL 55.52 AND 54.11

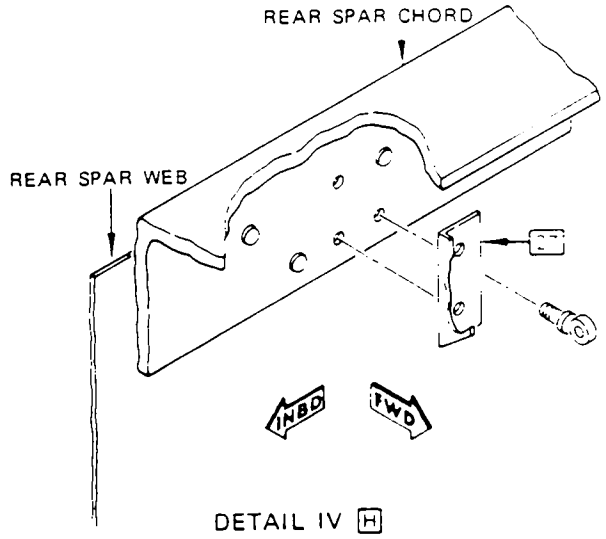

DETAIL IV [H]

REAR SPAR – CLIP INSTALLATION AT LBBL 13.57

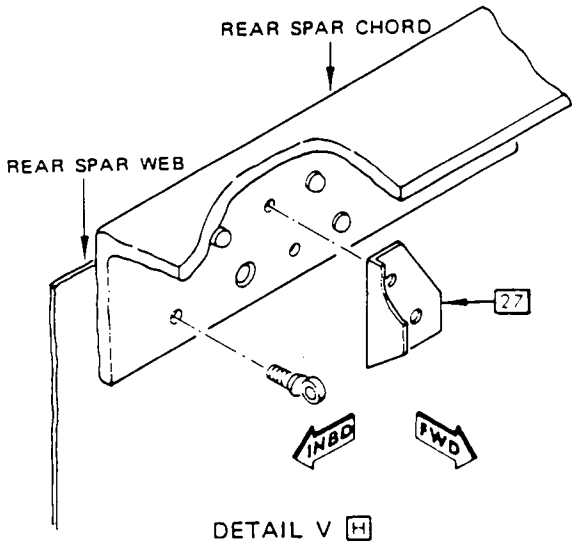

DETAIL V [H]

REAR SPAR – CLIP INSTALLATION AT LBBL 55.52 (RBBL 55.52 OPPOSITE)

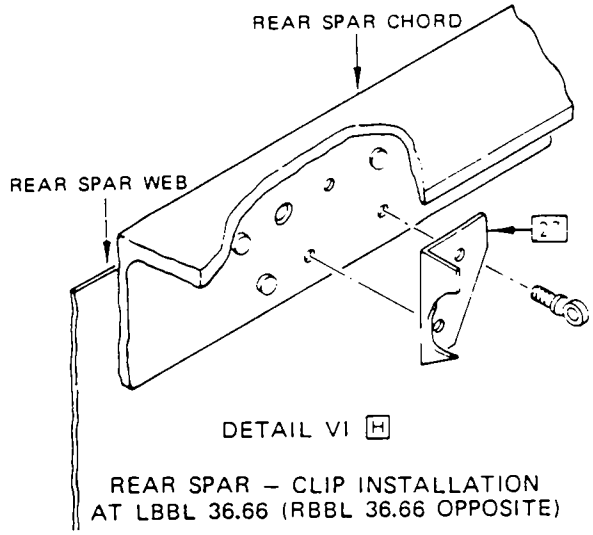

DETAIL VI [H]

REAR SPAR – CLIP INSTALLATION AT LBBL 36.66 (RBBL 36.66 OPPOSITE)

Wing Interspar Stiffeners Identification
Figure 4 (Sheet 8)

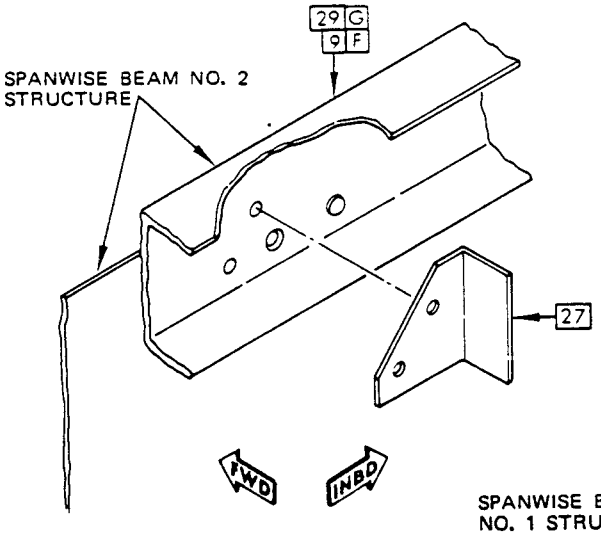

DETAIL VII H

SPANWISE BEAM NO. 2
CLIP INSTALLATION LBBL 54.11
(RBBL 54.11 OPPOSITE)

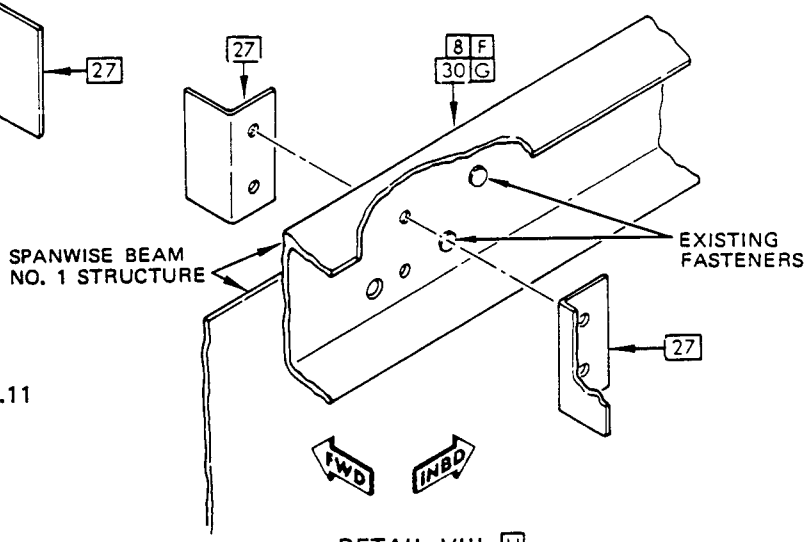

DETAIL VIII H

SPANWISE BEAM NO. 1 CLIP INSTALLATION
RBBL 13.71

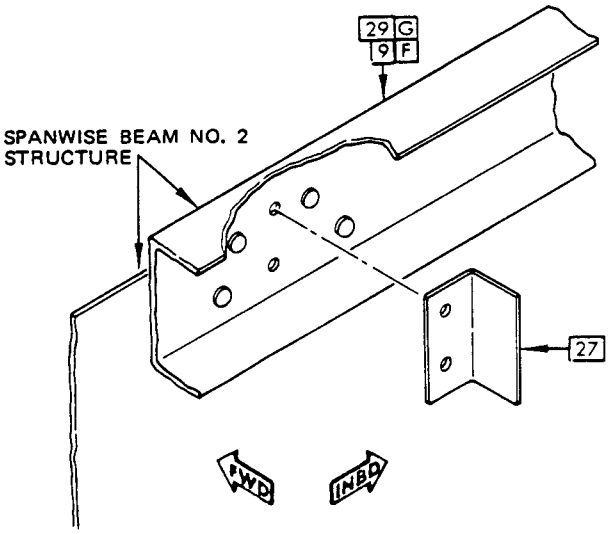

DETAIL IX H

SPANWISE BEAM NO. 2 CLIP
INSTALLATION LBBL 13.71
(RBBL 13.71 OPPOSITE)

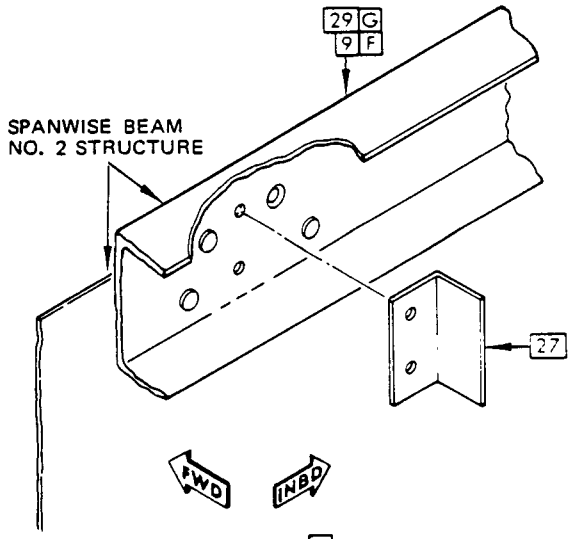

DETAIL X H

SPANWISE BEAM NO. 2 CLIP
INSTALLATION LBBL 36.91
(RBBL 36.91 OPPOSITE)

Wing Interspar Stiffeners Identification
Figure 4 (Sheet 9)

REF DWG
65-46498

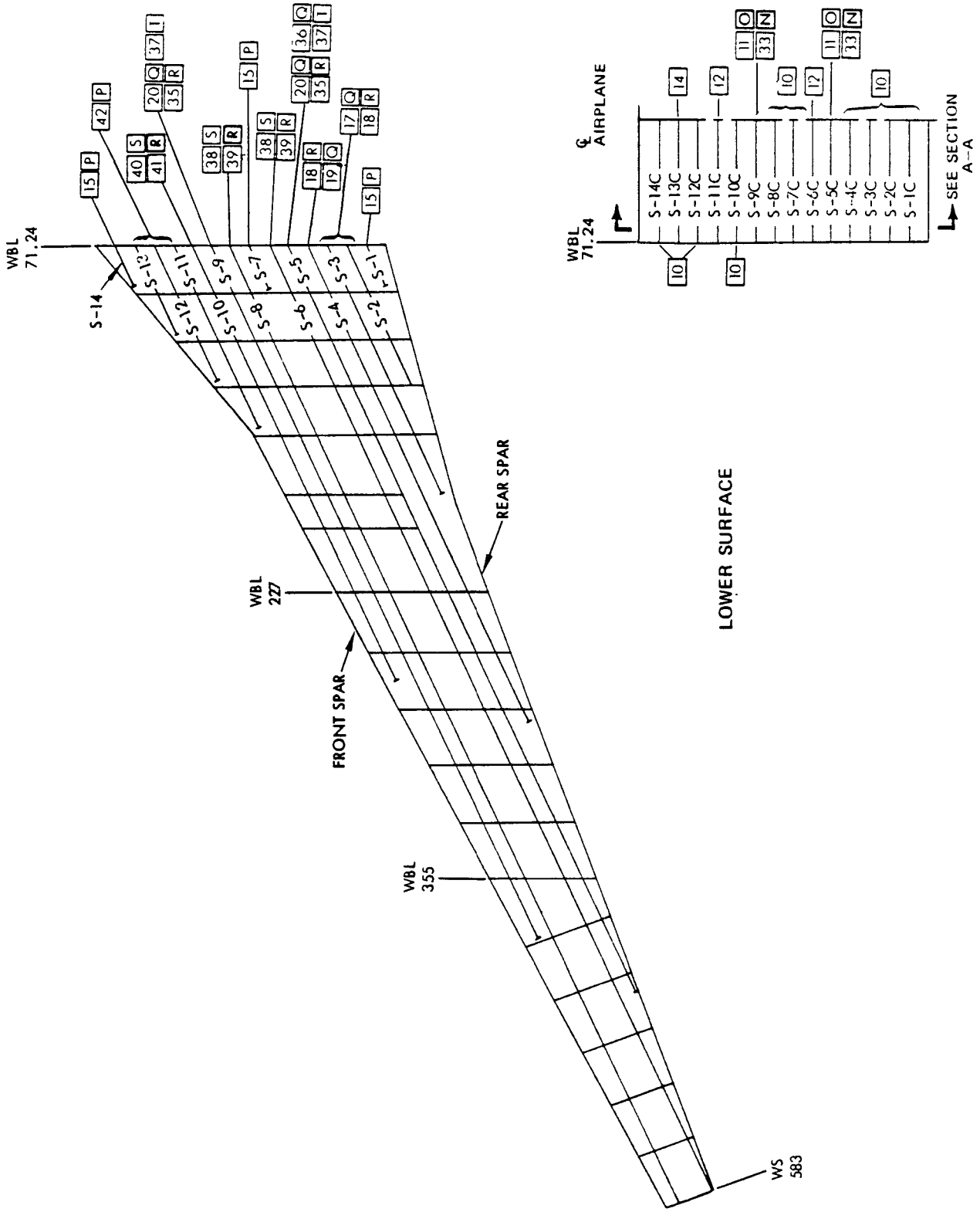

Wing Interspar Stiffeners Identification
Figure 4 (Sheet 10)

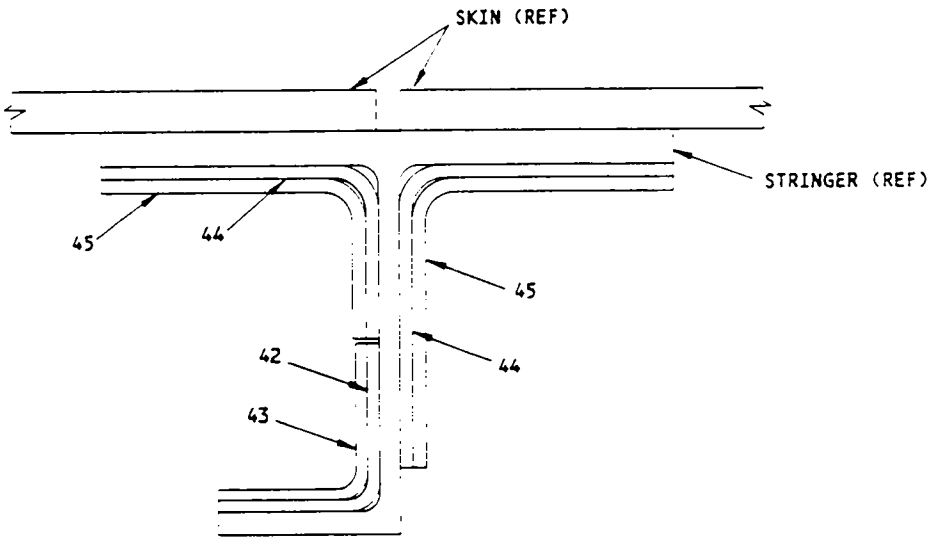

STRINGER 13 CRACK PREVENTIVE MODIFICATION FROM SB 57-1194
DETAIL XI

Wing Interspar Stiffeners Identification
Figure 4 (Sheet 11)

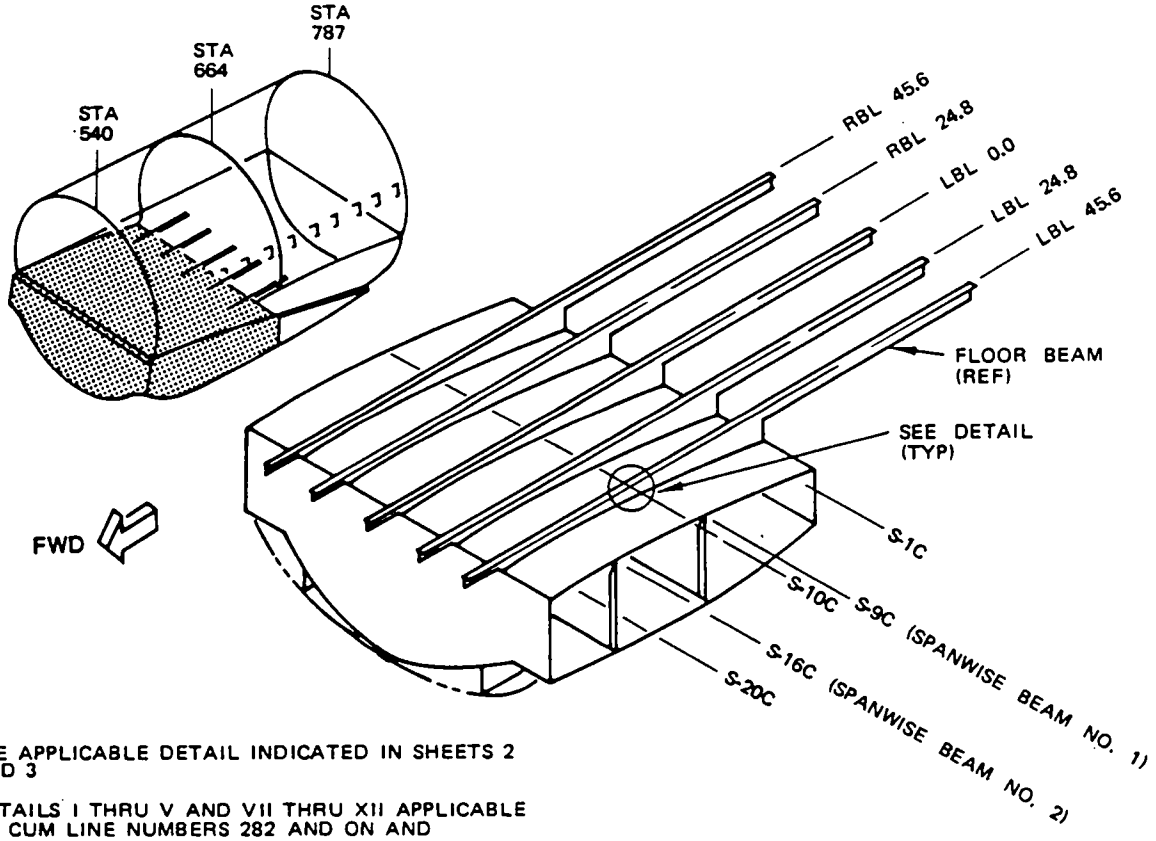

NOTES

- SEE APPLICABLE DETAIL INDICATED IN SHEETS 2 AND 3
- DETAILS I THRU V AND VII THRU XII APPLICABLE TO CUM LINE NUMBERS 282 AND ON AND AIRPLANES WITH SB 57-1045 INCORPORATED
- DETAIL VI APPLICABLE TO CUM LINE NUMBERS 323 AND ON AND AIRPLANES WITH SB 57-1045 OR SB 57-1099 INCORPORATED
- DETAIL XIII APPLICABLE TO CUM LINE NUMBERS 236 AND ON AND AIRPLANES WITH SB 57-1045 INCORPORATED

ITEM	MATERIAL	REPAIR FIG. NO.
1	RADIUS FILLER BAC1512-483 EXTRUSION 2024-T3511	
2	REINFORCING ANGLE AND10134-2001 EXTRUSION 2024-T3511	
3	REINFORCING CHANNEL AND10137-2202 EXTRUSION 2024-T3511	
4	ANGLE CLIP AND10134-2002 EXTRUSION 7075-T6511	

ITEM	MATERIAL	REPAIR FIG. NO.
5	RADIUS FILLER BAC1512-3384 EXTRUSION 2024-T3511	
6	TAPERED FILLER BAC1513-378 EXTRUSION 2024-T3511	
7	STIFFENER BAC1503-2733 EXTRUSION 7075-T6511	

Wing Center Section to Floor Beam Attachment Identification
Figure 5 (Sheet 1)

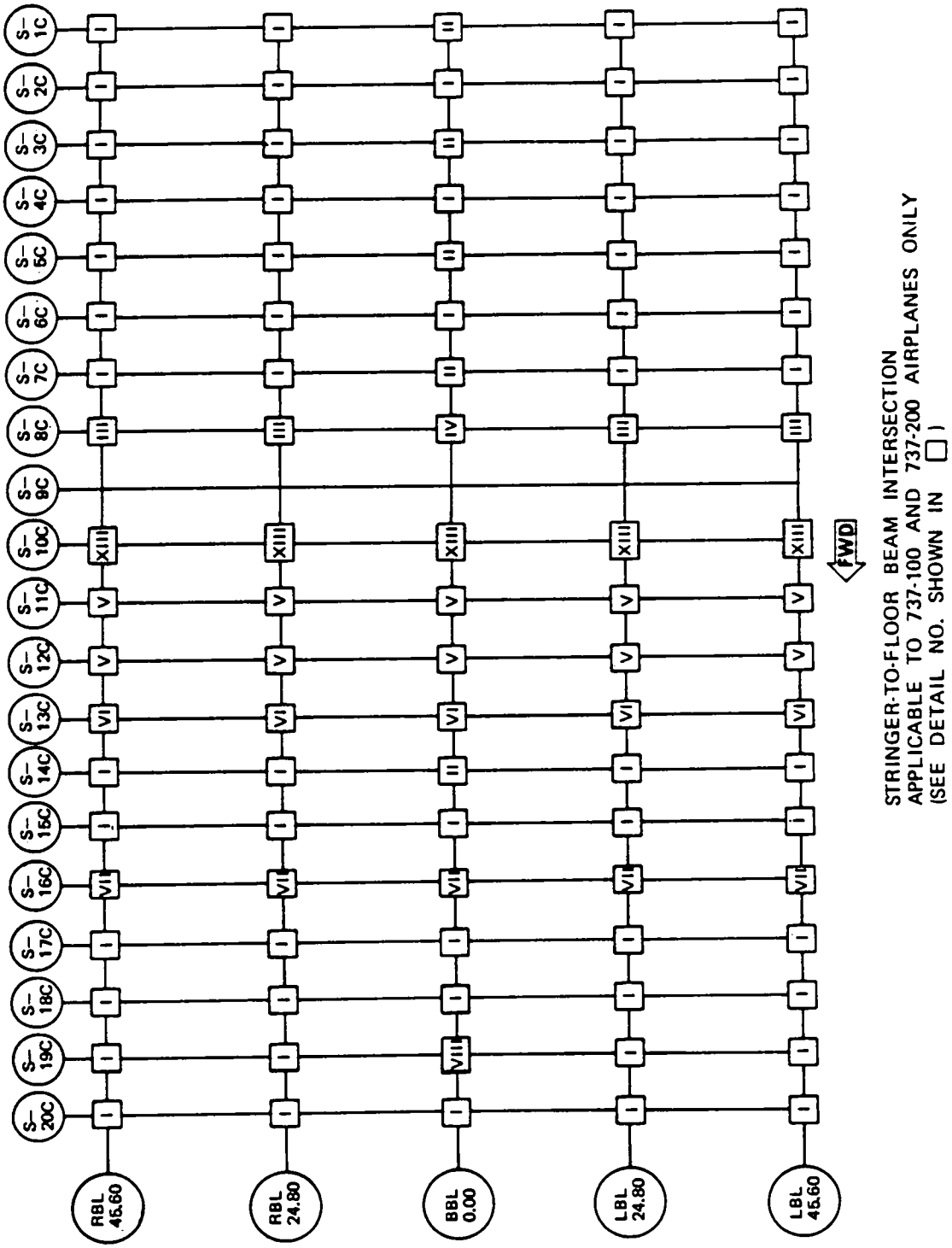

Wing Center Section to Floor Beam Attachment Identification
Figure 5 (Sheet 2)

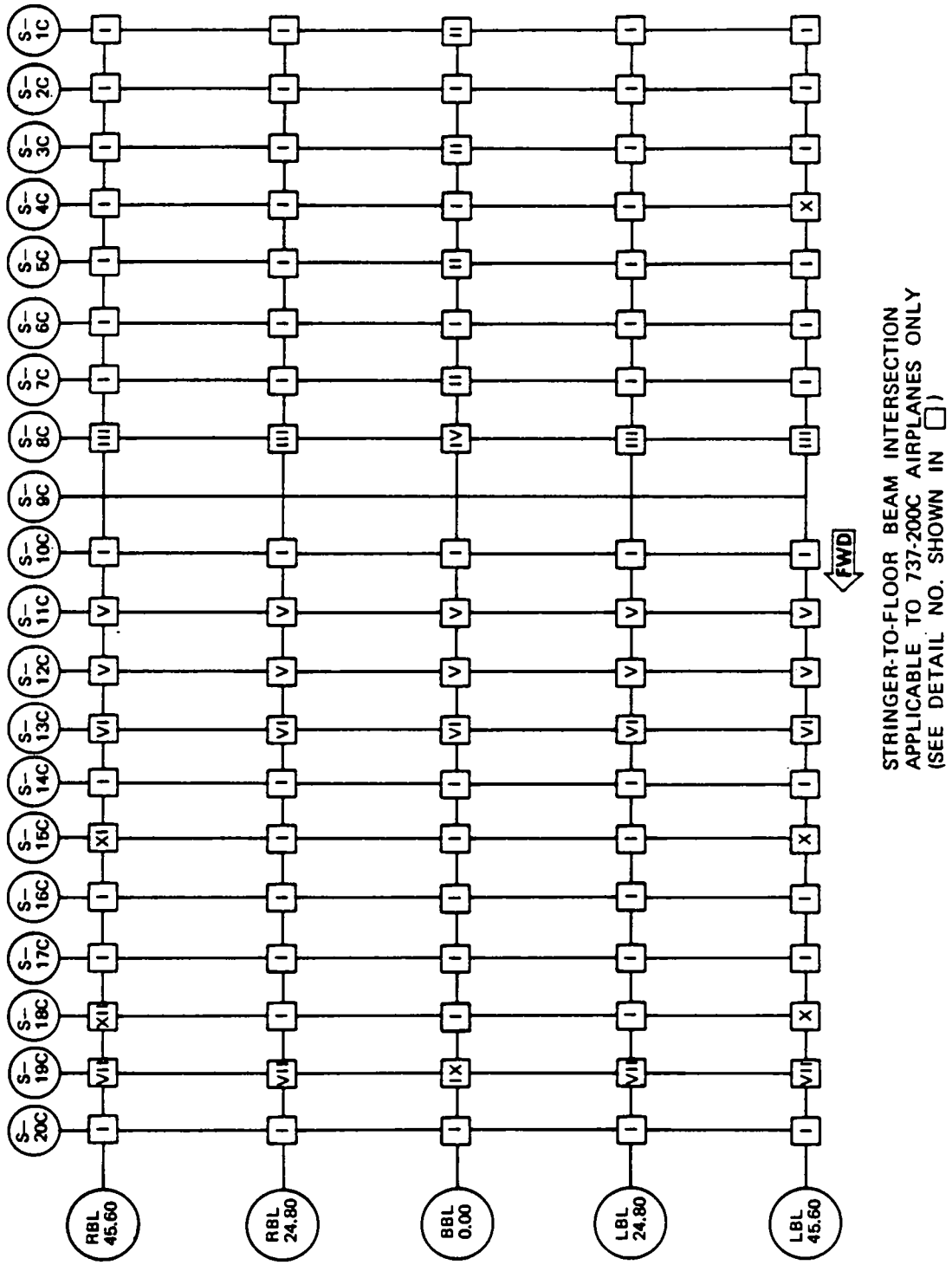

Wing Center Section to Floor Beam Attachment Identification
Figure 5 (Sheet 3)

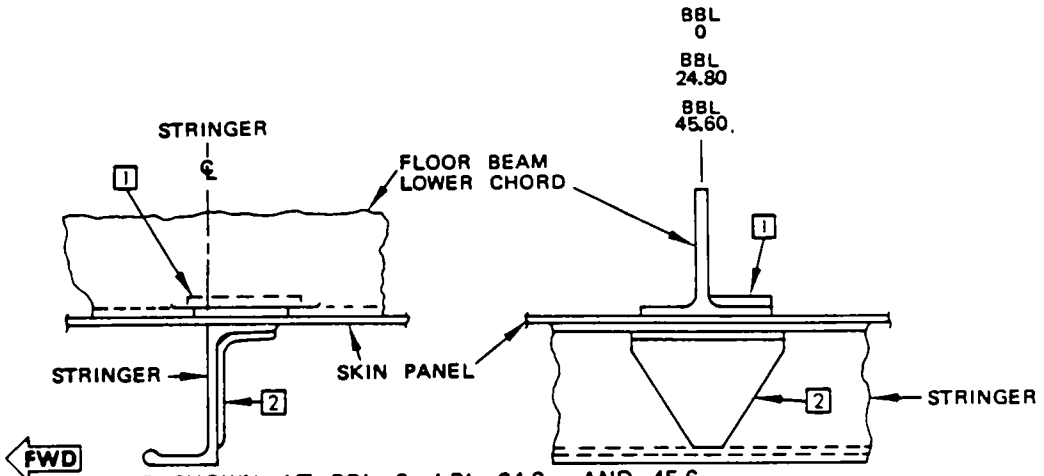

AS SHOWN AT BBL 0, LBL 24.8 AND 45.6
OPPOSITE RBL 24.8 AND 45.6

DETAIL I

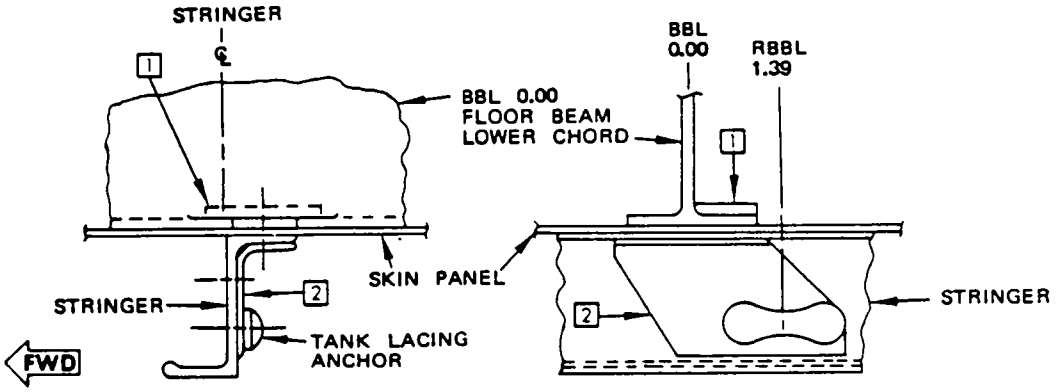

DETAIL II

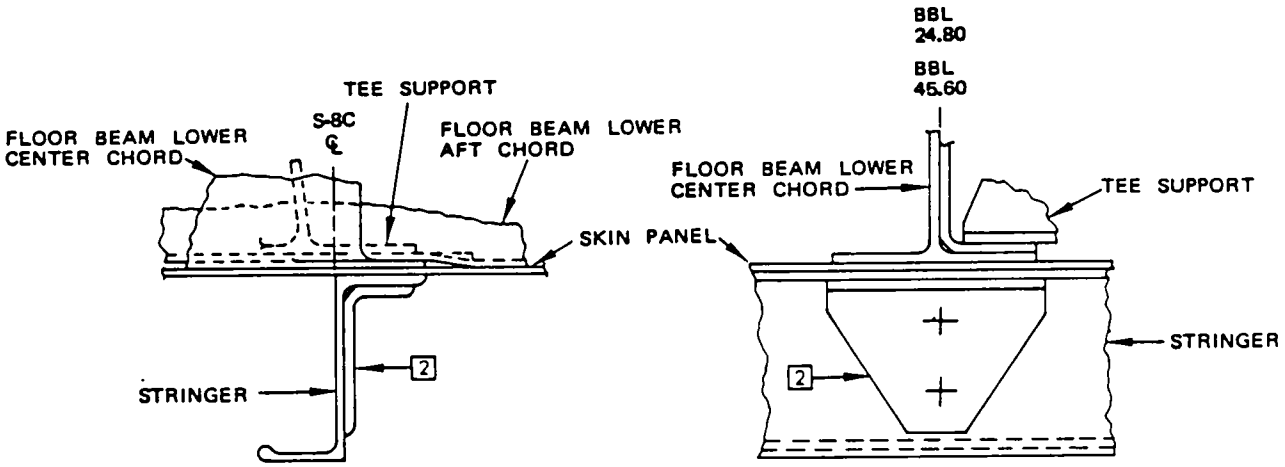

AS SHOWN LBL 24.80 AND 45.6
OPPOSITE RBL 24.80 AND 45.6

DETAIL III

Wing Center Section to Floor Beam Attachment Identification
Figure 5 (Sheet 4)

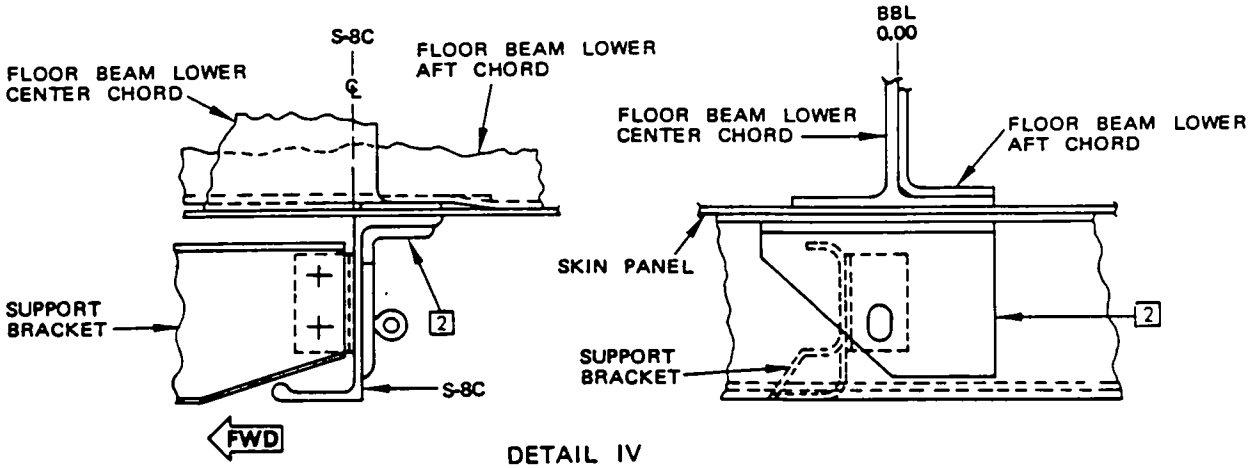

DETAIL IV

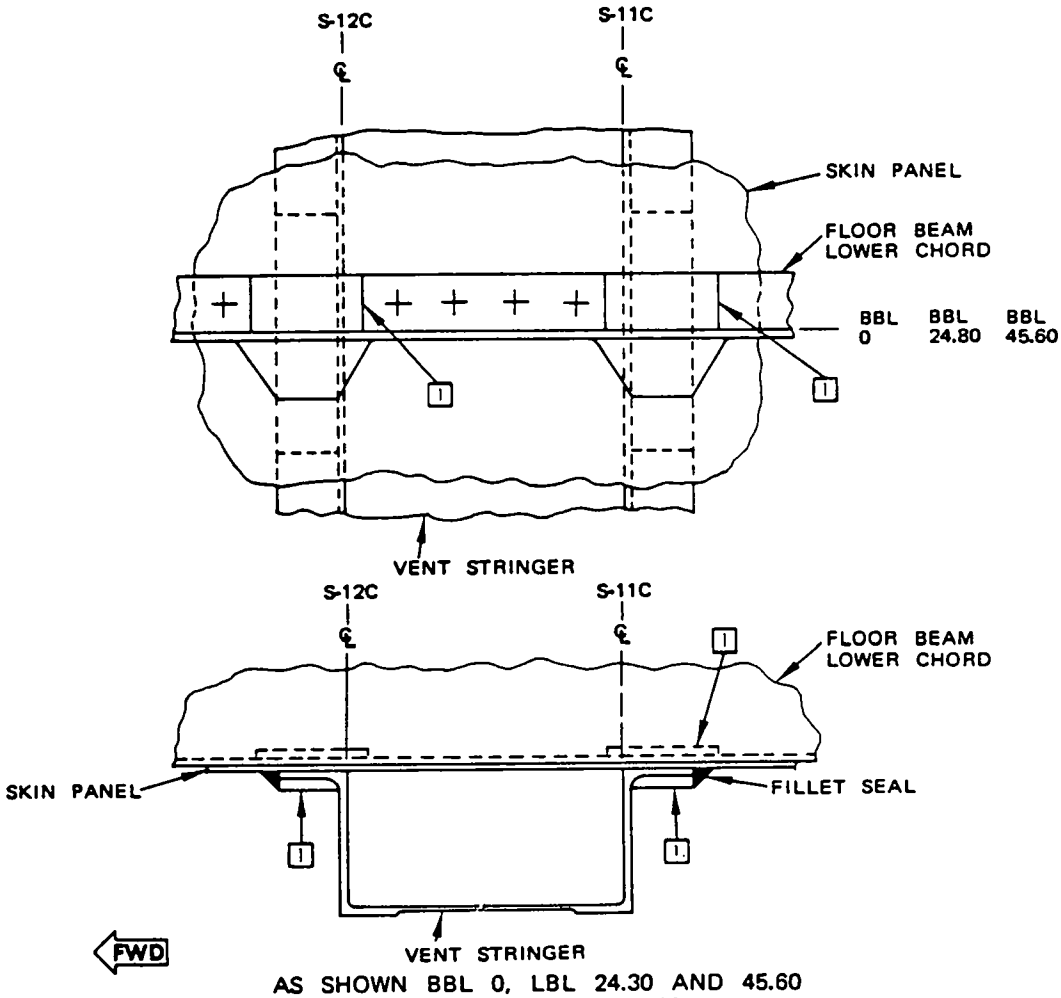

AS SHOWN BBL 0, LBL 24.30 AND 45.60
OPPOSITE RBL 24.80 AND 45.60

DETAIL V

Wing Center Section to Floor Beam Attachment Identification
Figure 5 (Sheet 5)

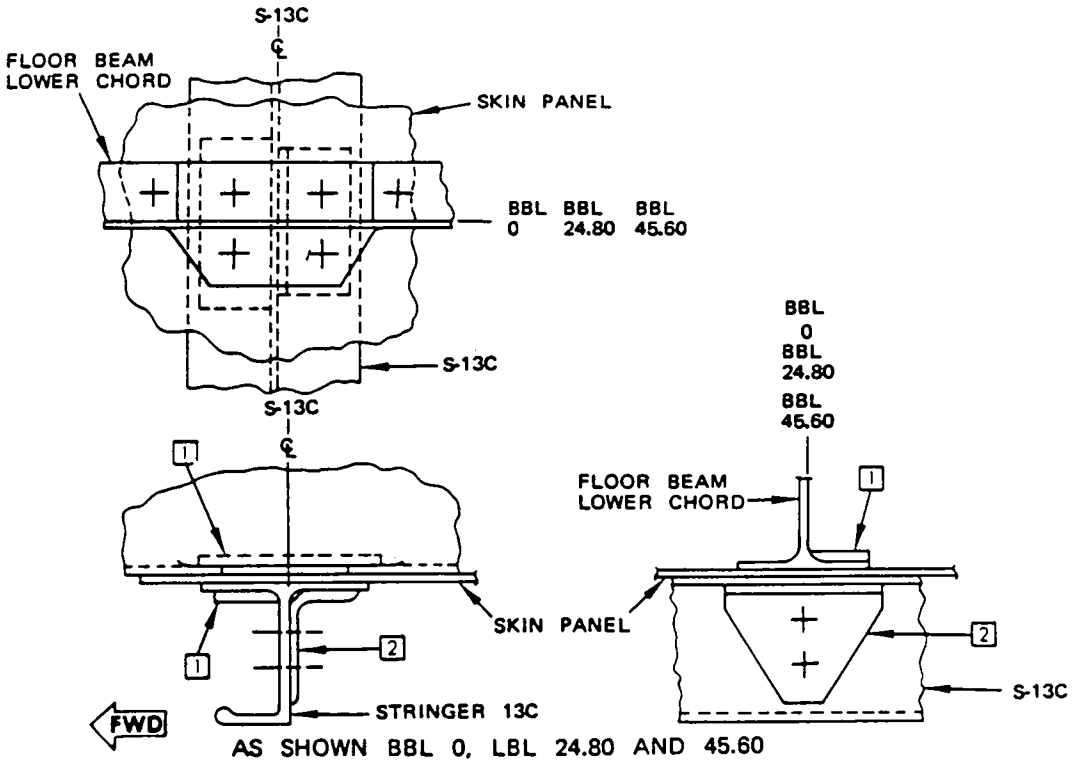

AS SHOWN BBL 0, LBL 24.80 AND 45.60
OPPOSITE RBL 24.80 AND 45.60

DETAIL VI

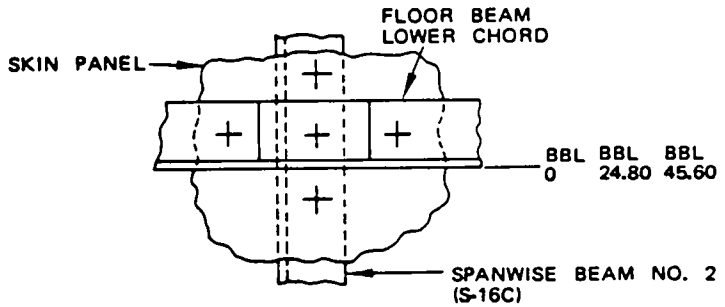

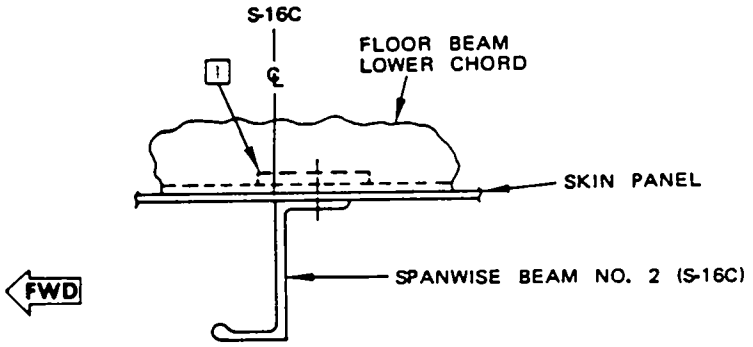

AS SHOWN BBL 0, LBL 24.80 AND 45.80
OPPOSITE, RBL 24.80 AND 45.6

DETAIL VII

Wing Center Section to Floor Beam Attachment Identification
Figure 5 (Sheet 6)

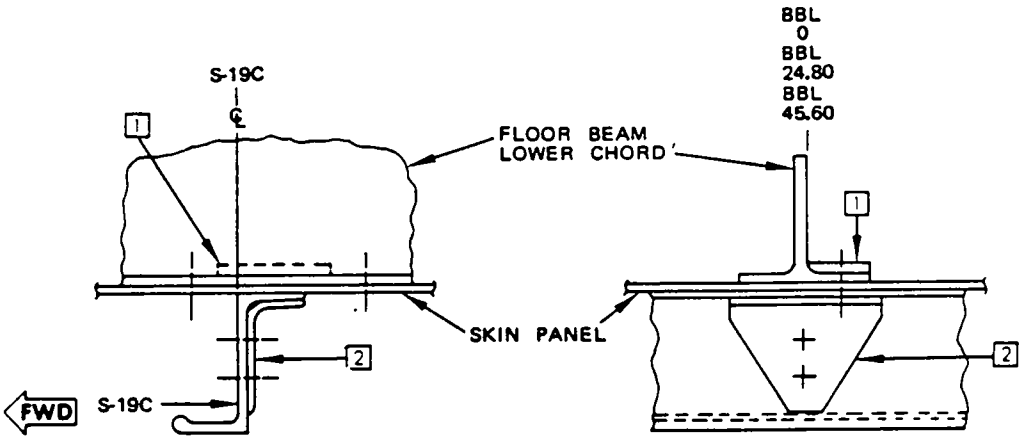

AS SHOWN BBL 0, LBL 24.80 AND 45.60
OPPOSITE RBL 24.80 AND 45.60

DETAIL VIII

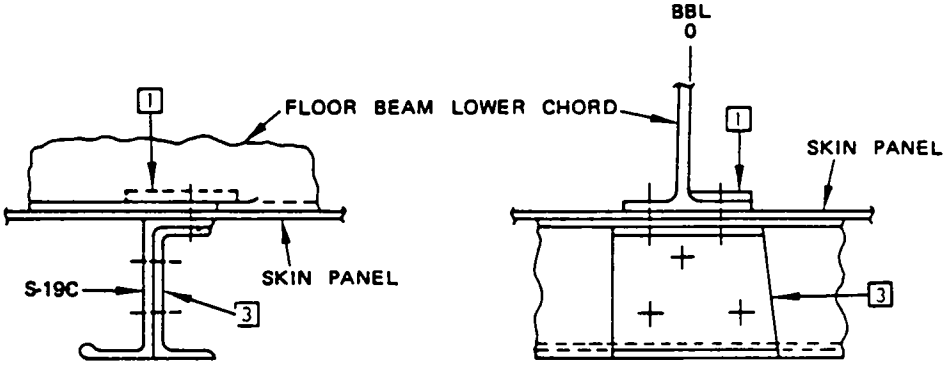

APPLICABLE TO AIRPLANES WITH FORWARD
FUEL CELL

DETAIL IX

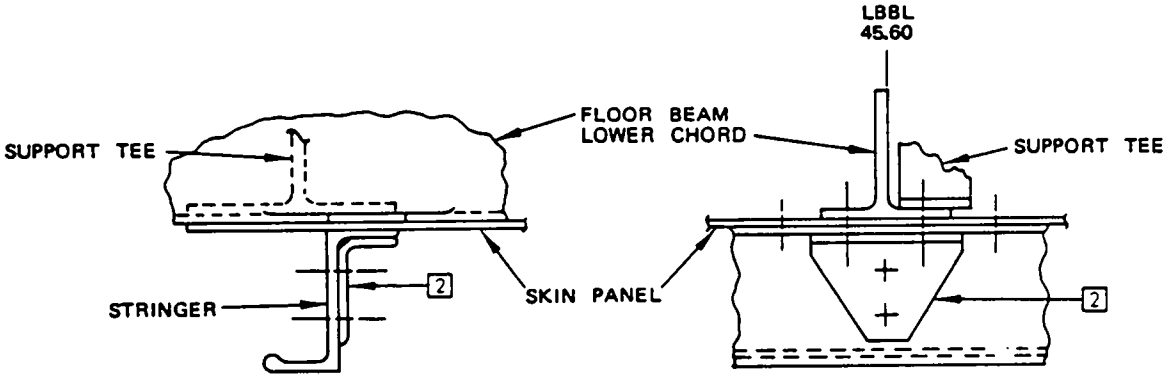

AS SHOWN FOR S-14C
SIMILAR FOR S-15C AND S-18C

APPLICABLE TO 737-200C AIRPLANES ONLY

DETAIL X

Wing Center Section to Floor Beam Attachment Identification
Figure 5 (Sheet 7)

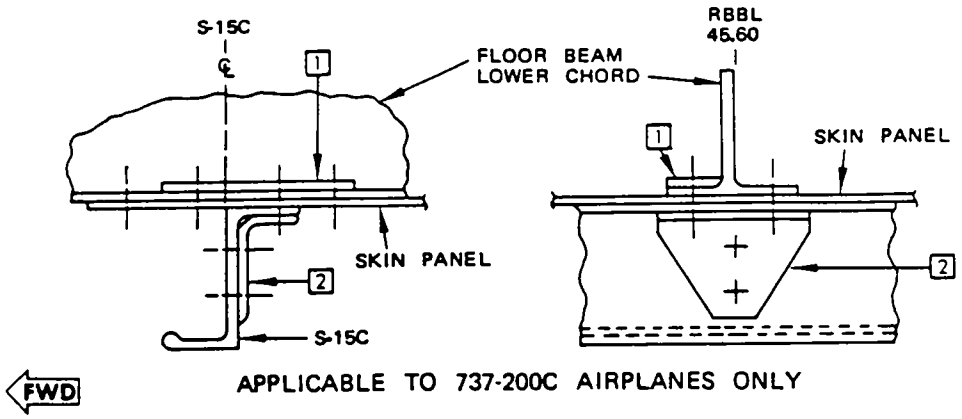

APPLICABLE TO 737-200C AIRPLANES ONLY

DETAIL XI

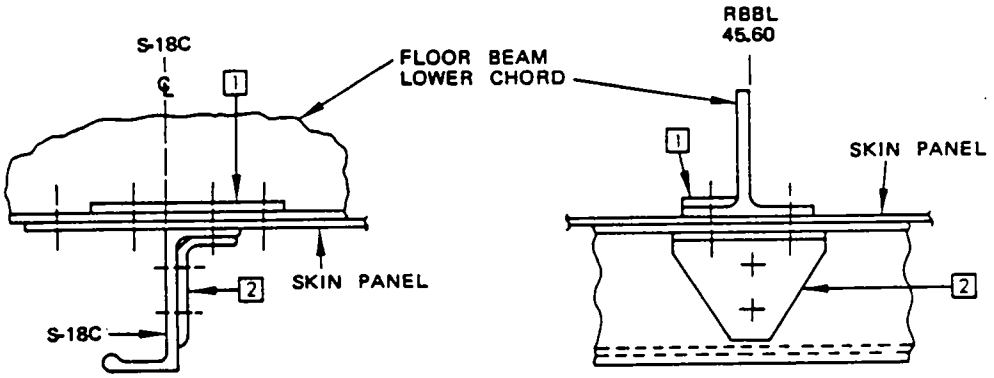

APPLICABLE TO 737-200C AIRPLANES ONLY

DETAIL XII

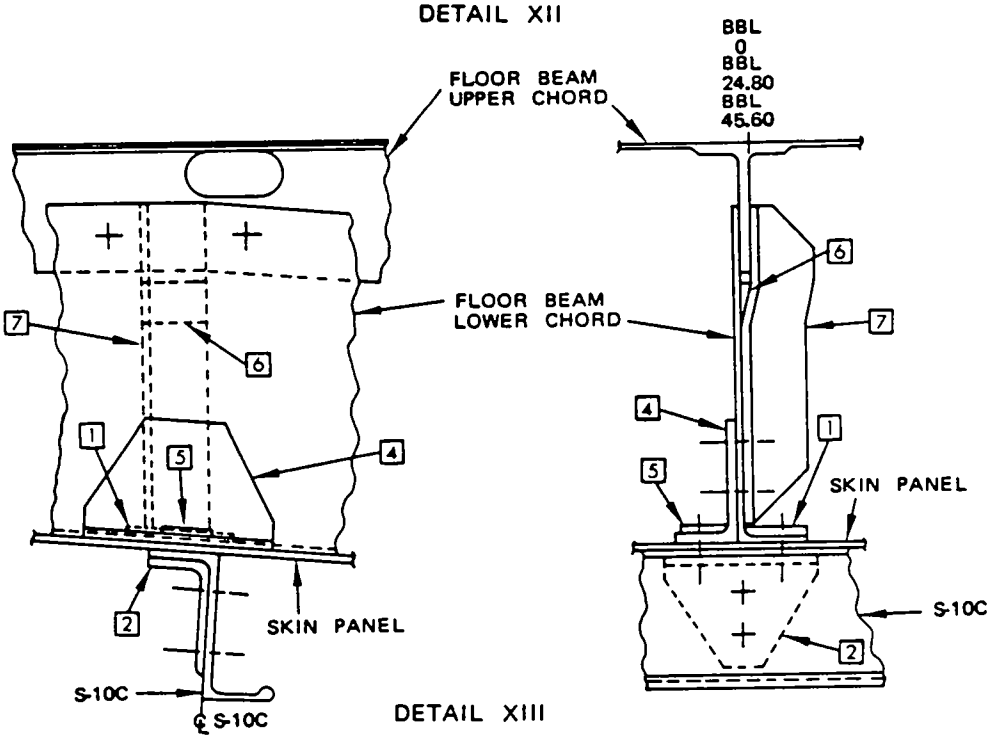

DETAIL XIII

Wing Center Section to Floor Beam Attachment Identification
Figure 5 (Sheet 8)

SEALING OF INTEGRAL FUEL TANK STRUCTURE REPAIRS IS REPLACED BY 51-20-4, PARAGRAPH 9.

FIGURE 1 IS REPLACED BY 51-20-4, FIGURE 7

FIGURE 2 IS REPLACED BY 51-20-4, FIGURE 8

FIGURE 3 IS REPLACED BY 51-20-4, FIGURE 9

SERVICE BULLETIN REPAIRS - WING CENTER SECTION

The following service bulletins contain spar center section repairs which are available for use where specific damage has been encountered. Usually, the service bulletin also covers preventive modification data which operators are encouraged to use to eliminate the need for repair.

DAMAGED AREA	CUM LINE NUMBER EFFECTIVITY [A]	SB NUMBER
WING CENTER BOX - FLOOR BEAM ATTACHMENT	1 THRU 281	737-57-1045

[A] FOR AIRPLANES ON WHICH PREVENTIVE MODIFICATION HAS NOT BEEN ACCOMPLISHED

BOEING PROPRIETARY - Copyright © - Unpublished Work - See title page for details.

REPAIR INSTRUCTIONS

1. Gain access to the work area.

   WARNING: MAKE SURE THERE IS GOOD VENTILATION IN THE WORK AREA AS GIVEN IN THE MAINTENANCE MANUAL. IF YOU DO NOT, THE RESULT MAY BE INJURY TO PERSONNEL.

   CAUTION: SUPPORT OF THE WING IS NOT REQUIRED WHEN REPAIRING ONE STIFFENER. IF TWO OR MORE STIFFENERS IN THE SAME AREA ARE TO BE REPAIRED, DEFUEL AND SUPPORT THE STRUCTURE IN THE JIG POSITION AS GIVEN IN SRM 51-50-1 BEFORE YOU CUT THE STIFFENERS.
2. Cut and remove the damaged portion of the stiffener Refer to Detail I.
3. Make the repair parts given in Table I.
4. Assemble the repair parts.
5. Drill the fastener holes.
6. Remove the repair parts.
7. Remove all nicks, scratches, burrs, and sharp edges from the initial and repair parts.
8. Apply a chemical conversion coating to the repair parts and the bare surfaces of the initial parts. Refer to SRM 51-10-2.
9. Apply primer BMS 10-20, Type II to the repair parts.
10. Install the repair parts with BMS 5-26, Type II sealant between the mating surfaces. Refer to SRM 51-20-4.
11. Install fasteners wet with BMS 5-26, Type II sealant in transition fit holes.
12. Apply a cap seal with BMS 5-26 sealant to the fasteners that go through the skin. Refer to AMM 28-11-0.
13. Apply BMS 10-20, Type II protective coating to sealant.
14. Apply the finish. Refer to AMM 51-21.

NOTES

- THIS REPAIR WILL HAVE AN EFFECT ON THE STRUCTURALLY SIGNIFICANT ITEM (SSI):
  - NUMBER W-31 WHEN INSTALLED AT RIB LOCATIONS BUT THE INSPECTION OF RIB UPPER CHORD IS STILL APPLICABLE
  - NUMBER W-41 WHEN INSTALLED IN THE DRY BAY BETWEEN WBL 157 TO WBL 227 BUT THE EXTERNAL INSPECTION ALTERNATIVE IS STILL APPLICABLE

  THUS, NO NEW INSPECTION ALTERNATIVES ARE NECESSARY. DO THE INSPECTIONS FOR W-31 AND W-41, IF NECESSARY, AT THE SUBSEQUENT SUPPLEMENTAL INSPECTION DOCUMENT (SSID) INSPECTION ON THIS AIRPLANE. REFER TO SRM 51-00-4, FIG. 3 FOR APPLICABLE SSI DATA.
- WHEN YOU DO THIS REPAIR, REFER TO:
  - AMM 28-11-00 FOR FUEL TANK SEALING
  - AMM 51-21-00 FOR INTERIOR AND EXTERIOR FINISHES
  - SRM 51-10-1 FOR INVESTIGATION AND CLEANUP OF DAMAGE
  - SRM 51-10-2 FOR PROTECTIVE TREATMENT OF METALS
  - SRM 51-20-4 FOR SEALING OF REPAIRS
  - SRM 51-30-00 FOR FASTENER CODE, REMOVAL, INSTALLATION, HOLE SIZES, EDGE MARGINS, AND SUBSTITUTION.

[A] AS AN ALTERNATIVE, INSTALL A 1/32-INCH OVERSIZE BACB30NY()K()Y HEX DRIVE BOLT WITH A BACC30AC COLLAR.

[B] 7075-0 HT-T6 MAY BE USED AS A SUBSTITUTE

FASTENER SYMBOLS

INITIAL FASTENER LOCATION. [A]

REPAIR FASTENER LOCATION. INSTALL A BACB30MY8K OR BACB30FM8A FASTENER.

REPAIR MATERIAL			
PART		QTY	MATERIAL
1	ANGLE	1	0.080 INCH THICK 7178-0 HT-T6 [B]
2	ANGLE	1	0.080 INCH THICK 7178-0 HT-T6 [B]
3	ANGLE	1	0.080 INCH THICK 7178-0 HT-T6 [B]
4	ANGLE	1	0.080 INCH THICK 7178-0 HT-T6 [B]
5	FILLER	1	SAME AS THE INITIAL EXTRUSION

TABLE I

Typical Wing Upper Surface Z Stiffener Repair
Figure 1 (Sheet 1)

BOEING PROPRIETARY - Copyright © - Unpublished Work - See title page for details.

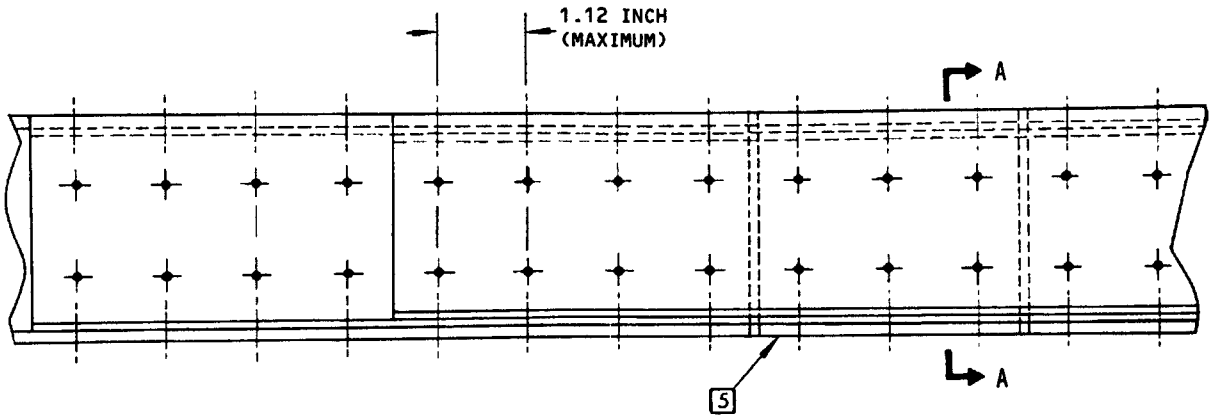

REPAIR SIMILAR ON EACH SIDE OF DAMAGE
DETAIL I

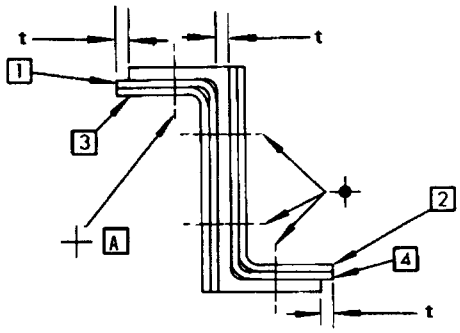

SECTION A-A

Typical Wing Upper Surface Z Stiffener Repair
Figure 1 (Sheet 2)

BOEING PROPRIETARY - Copyright © - Unpublished Work - See title page for details.

REPAIR INSTRUCTIONS

WARNING: MAKE SURE THERE IS GOOD VENTILATION IN THE WORK AREA AS GIVEN IN THE MAINTENANCE MANUAL. IF YOU DO NOT, THE RESULT MAY BE INJURY TO PERSONNEL.

CAUTION: SUPPORT OF THE WING IS NOT REQUIRED WHEN REPAIRING ONE STIFFENER. IF TWO OR MORE STIFFENERS IN THE SAME AREA ARE TO BE REPAIRED, DEFUELING AND SUPPORT OF THE STRUCTURE IN THE JIG POSITION ACCORDING TO SRM 51-50-1 MUST BE ACCOMPLISHED BEFORE CUTTING THE STIFFENERS.

1. Get access to the work area.
2. Cut and remove the damaged portion of the stiffener Refer to Detail I.
3. Make the repair parts given in Table I.
4. Assemble the repair parts. Refer to Detail I.
5. Drill the fastener holes.
6. Remove the repair parts.
7. Remove all nicks, scratches, burrs, and sharp edges from the initial and repair parts.
8. Apply a chemical conversion coating to the repair parts and the bare surfaces of the initial parts. Refer to SRM 51-10-2.
9. Apply primer BMS 10-20, Type II to the repair parts and the bare surfaces of the initial parts.
10. Install the repair parts with BMS 5-26, Type II sealant between the mating surfaces. Refer to SRM 51-20-4.
11. Shim all gaps that are equal to or more than 0.005 inch.
12. Install fasteners wet with BMS 5-26, Type II sealant. Install the hex drive fasteners in transition fit holes.
13. Apply a fillet seal with BMS 5-26, Type II sealant as given in AMM 28-11-0.
14. Apply a cap seal with BMS 5-26, Type II sealant to the fasteners that go through the skin as given in AMM 28-11-0.
15. Apply BMS 10-20, Type II protective coating to sealant.
16. Apply finish to the repair area as necessary. Refer to AMM 51-21.

NOTES

- THIS REPAIR WILL HAVE AN EFFECT ON THE STRUCTURALLY SIGNIFICANT ITEM (SSI) NUMBER W-31 WHEN INSTALLED AT THE RIB LOCATIONS BUT THE INSPECTION OF THE RIB UPPER CHORD IS STILL APPLICABLE. DO THE INSPECTIONS FOR W-31, IF NECESSARY, AT THE SUBSEQUENT SUPPLEMENTAL STRUCTURAL INSPECTION DOCUMENT (SSID) INSPECTION ON THIS AIRPLANE. REFER TO SRM 51-00-4, FIG. 3 FOR APPLICABLE SSI DATA.
- WHEN YOU DO THIS REPAIR, REFER TO:
  - AMM 28-11-00 FOR FUEL TANK SEALING
  - AMM 51-21-00 FOR INTERIOR AND EXTERIOR FINISHES
  - SRM 51-10-1 FOR INVESTIGATION AND CLEANUP OF DAMAGE
  - SRM 51-10-2 FOR PROTECTIVE TREATMENT OF METALS
  - SRM 51-20-1 FOR MINIMUM BEND RADII FOR STRAIGHT LINE BENDS IN ALUMINUM SHEETS
  - SRM 51-20-4 FOR SEALING OF REPAIRS
  - SRM 51-30-0 FOR FASTENER CODE, REMOVAL, INSTALLATION, HOLE SIZES, EDGE MARGINS, AND SUBSTITUTION.

[A] FOR LOCATIONS WHERE THE INITIAL FASTENER IS A LOCKBOLT, INSTALL A REPAIR FASTENER THAT IS THE SAME DIAMETER AND TYPE AS THE INITIAL FASTENER.

FOR LOCATIONS WHERE THE INITIAL FASTENER IS AN 82° RIVET, INSTALL A 1/32-INCH OVERSIZE BACB30NY()K()Y HEX DRIVE BOLT WITH A BACC30AC COLLAR.

FOR LOCATIONS WHERE THE INITIAL FASTENER IS A 100° RIVET, INSTALL A 1/64 INCH OVERSIZE BACB30FQ()A HEX DRIVE BOLT AS THE REPAIR FASTENER.

[B] 7075-0 HT-T6 CAN BE USED AS A SUBSTITUTE.

FASTENER SYMBOLS

┼ INITIAL FASTENER LOCATION. [A]

✦ REPAIR FASTENER LOCATION. INSTALL A MS90354U08 BLIND FASTENER (MS21141-08()P IS AN ALTERNATIVE BLIND FASTENER).

Typical Wing Upper Surface Vent Stiffener Repair
Figure 2 (Sheet 1)

BOEING PROPRIETARY - Copyright © - Unpublished Work - See title page for details.

REPAIR MATERIAL			
PART		QTY	MATERIAL
1	ANGLE	2	0.040 INCH THICK 7178-O HT-T6 B
2	ANGLE	2	0.071 INCH THICK 7178-O HT-T6 B
3	ANGLE	2	0.071 INCH THICK 7178-O HT-T6 B
4	PLATE	1	0.040 INCH THICK 7178-T6 B
5	FILLER	1	7178-T6 B
6	FILLER	1	SAME AS ORIGINAL EXTRUSION
7	PLATE	1	0.071 INCH THICK 7178-T6 B
8	PLATE	1	0.071 INCH THICK 7178-T6 B

TABLE I

Typical Wing Upper Surface Vent Stiffener Repair
Figure 2 (Sheet 2)

BOEING PROPRIETARY - Copyright © - Unpublished Work - See title page for details.

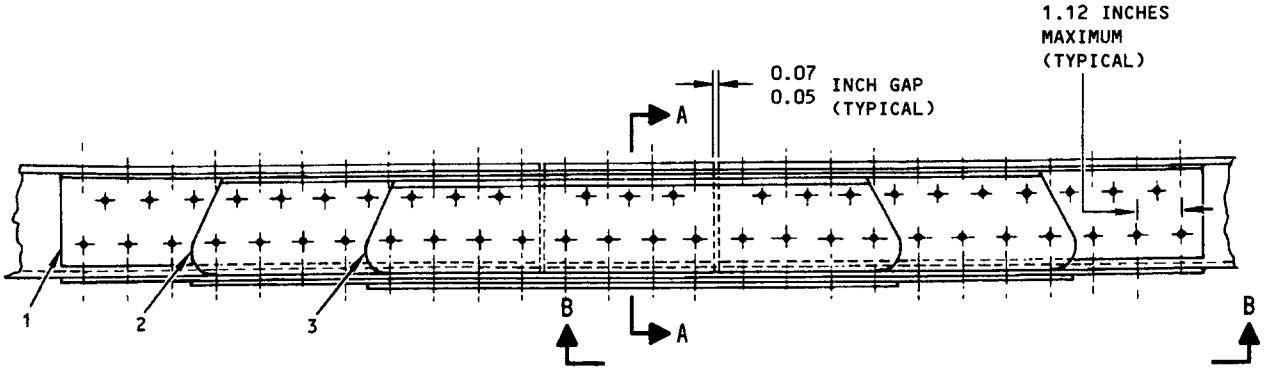

DETAIL I

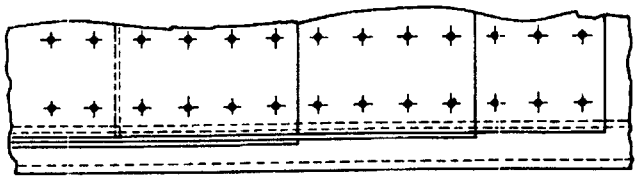

BOTTOM VIEW

B-B

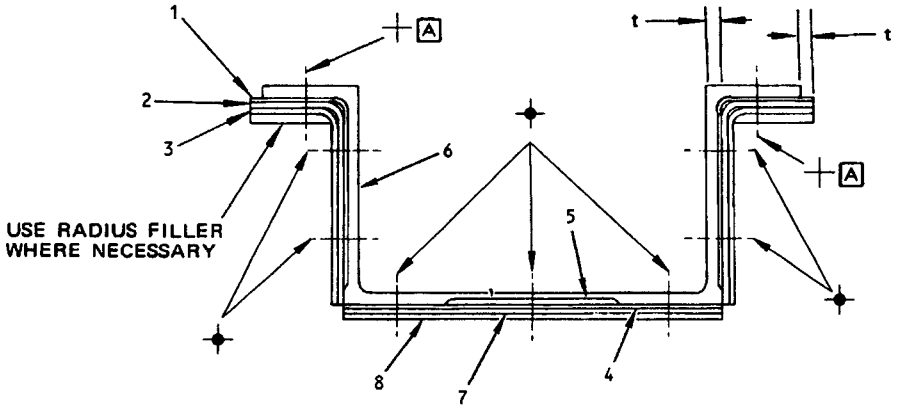

SECTION A-A

Typical Wing Upper Surface Vent Stiffener Repair
Figure 2 (Sheet 3)

BOEING PROPRIETARY - Copyright © - Unpublished Work - See title page for details.

APPLICABILITY

THIS REPAIR APPLIES TO UPPER STIFFENER 13 IN THE REGION OF THE SKIN SPLICE.

REPAIR INSTRUCTIONS

WARNING: MAKE SURE THERE IS GOOD VENTILATION IN THE WORK AREA AS GIVEN IN THE MAINTENANCE MANUAL. IF YOU DO NOT, THE RESULT CAN BE INJURY TO PERSONNEL.

1. Gain access to the work area.

CAUTION: SUPPORT OF THE WING IS NOT REQUIRED WHEN REPAIRING ONE STIFFENER. IF TWO OR MORE STIFFENERS IN THE SAME AREA ARE TO BE REPAIRED, DEFUELING AND SUPPORT OF THE STRUCTURE IN THE JIG POSITION AS GIVEN IN SRM 51-50-1 MUST BE ACCOMPLISHED BEFORE CUTTING THE STIFFENERS.

2. Cut and remove the damaged part of the stiffener. Due to the pitch of the existing riveting the cut lines must be positioned to pass through the centers of rivets in two of the rows. These rivets will be used as blocking fasteners after the repair. Refer to Detail I.
3. Make the repair parts given in Table I.
4. Assemble the repair parts. Refer to Detail I.
5. Drill the fastener holes.
6. Remove the repair parts.
7. Remove all nicks, scratches, burrs, and sharp edges from the initial and repair parts.
8. Apply a chemical conversion coating to the repair parts and the bare surfaces of the initial parts. Refer to SRM 51-10-2.
9. Apply primer BMS 10-20, Type II to the repair parts.
10. Install the repair parts with BMS 5-26, Type II sealant between the mating surfaces. Refer to SRM 51-20-4.
11. Shim all gaps equal to or more than 0.005 inch.
12. Install fasteners wet with BMS 5-26, Type II sealant. Install the hexdrive fasteners in transition fit holes.
13. Insert the blocking fasteners in the locations provided.
14. Apply a fillet seal with BMS 5-26, Type II sealant as given in AMM 28-11-0.
15. Apply a cap seal with BMS 5-26 sealant to the fasteners that go through the skin. Refer to AMM 28-11-0.
16. Apply BMS 10-20, Type II protective coating to sealant.
17. Apply finish to the repair area as necessary. Refer to AMM 51-21.

NOTES

- THIS REPAIR WILL HAVE AN EFFECT ON THE STRUCTURALLY SIGNIFICANT ITEM (SSI) NUMBER W-16 BUT THE INSPECTION IS STILL APPLICABLE. DO THE INSPECTION FOR W-16, IF NECESSARY, AT THE SUBSEQUENT SUPPLEMENTAL STRUCTURAL INSPECTION DOCUMENT (SSID) INSPECTION ON THIS AIRPLANE. REFER TO SRM 51-00-4, FIG. 3 FOR APPLICABLE SSI DATA.
- WHEN YOU DO THIS REPAIR, REFER TO:
  - AMM 28-11-00 FOR FUEL TANK SEALING
  - AMM 51-21-00 FOR INTERIOR AND EXTERIOR FINISHES
  - SRM 51-10-1 FOR INVESTIGATION AND CLEANUP OF DAMAGE
  - SRM 51-10-2 FOR PROTECTIVE TREATMENT OF METALS
  - SRM 51-20-4 FOR SEALING OF REPAIRS
  - SRM 51-30-0 FOR FASTENER CODE, REMOVAL, INSTALLATION, HOLE SIZES, EDGE MARGINS, AND SUBSTITUTION.

[A] 7075-0 HT-T6 MAY BE USED AS A SUBSTITUTE.

FASTENER SYMBOLS

+ INITIAL FASTENER LOCATION. INSTALL A 1/64 INCH OVERSIZE BACB30NY()K()X FASTENER. 1/64 INCH OVERSIZE BACB30LU OR 1/32 INCH OVERSIZE BACB30NY()K()Y ARE ALTERNATIVE FASTENERS.

INITIAL FASTENER LOCATION. INSTALL A BACR15BB10AD FASTENER.

REPAIR FASTENER LOCATION. INSTALL A BACB30FM()8 HEX DRIVE FASTENER.

Wing Upper Surface Stiffener Repair at Skin Splice
Figure 3 (Sheet 1)

BOEING PROPRIETARY - Copyright © - Unpublished Work - See title page for details.

REPAIR MATERIAL			
PART		QTY	MATERIAL
1	CHANNEL	1	0.040 INCH THICK 7178-O HT-T6 [A]
2	ANGLE	1	0.040 INCH THICK CLAD 7178-O HT-T6 [A]
3	CHANNEL	1	0.071 INCH THICK 7178-O HT-T6 [A]
4	ANGLE	1	0.071 INCH THICK 7178-O HT-T6 [A]
5	ANGLE	1	0.071 INCH THICK 7178-O HT-T6 [A]
6	PLATE	1	0.140 INCH THICK 7178-T6 [A]
7	PLATE	1	0.140 INCH THICK 7178-T6 [A]
8	FILLER	1	SAME AS ORIGINAL EXTRUSION

TABLE I

Wing Upper Surface Stiffener Repair at Skin Splice
Figure 3 (Sheet 2)

BOEING PROPRIETARY - Copyright © - Unpublished Work - See title page for details.

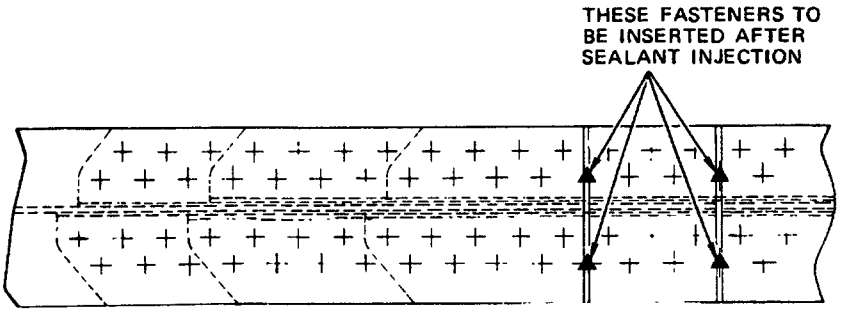

VIEW A-A

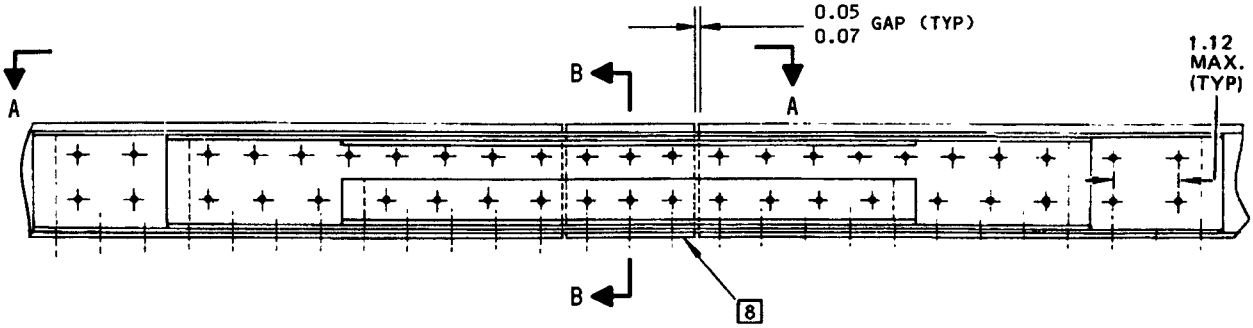

DETAIL I

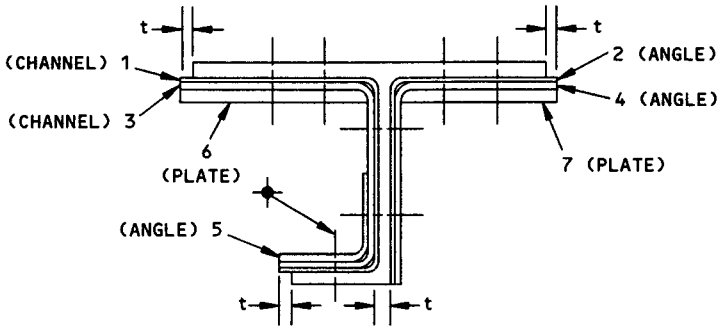

SECTION B-B

Wing Upper Surface Stiffener Repair at Skin Splice
Figure 3 (Sheet 3)

BOEING PROPRIETARY - Copyright © - Unpublished Work - See title page for details.

REPAIR INSTRUCTIONS

WARNING: MAKE SURE THERE IS GOOD VENTILATION IN THE WORK AREA AS GIVEN IN THE AMM 28-10 IF YOU DO NOT, THE RESULT CAN BE INJURY TO PERSONNEL.

1. Gain access to the work area.
2. Cut and remove the damaged portion of the stiffener Refer to Detail I.
3. Make the repair parts given in Table I.
4. Assemble the repair parts. Refer to Detail I.
5. Drill the fastener holes.
6. Remove the repair parts.
7. Remove all nicks, scratches, burrs, and sharp edges from the initial and repair parts.
8. Apply a chemical conversion coating to the repair parts and the bare surfaces of the initial parts. Refer to SRM 51-10-2.
9. Apply primer BMS 10-20, Type II to the repair parts.
10. Install the repair parts with BMS 5-26, Type II sealant between the mating surfaces. Refer to SRM 51-20-4.
11. Shim all gaps greater than 0.005 inch before fastener installation.
12. Install fasteners wet with BMS 5-26, Type II sealant in transition fit holes.
13. Apply a fillet seal with BMS 5-26, Type II sealant as given in AMM 28-11-0.
14. Apply a cap seal with BMS 5-26 sealant to the fasteners that go through the skin as given in AMM 28-11-0.
15. Apply BMS 10-20, Type II protective coating to the sealant.
16. Apply finish to the repair area as necessary. Refer to AMM 51-21.

NOTES

- THIS REPAIR COULD HAVE AN EFFECT ON A STRUCTURALLY SIGNIFICANT ITEM (SSI) GIVEN IN SRM 51-00-4, FIG. 3. BUT, NO CHANGE TO THE SUPPLEMENTAL STRUCTURAL INSPECTION DOCUMENT (SSID) INSPECTION PROGRAM IS NECESSARY.

WHEN YOU DO THIS REPAIR, REFER TO:

- AMM 28-11-00 FOR FUEL TANK SEALING
- AMM 51-21-00 FOR INTERIOR AND EXTERIOR FINISHES
- SRM 51-10-1 FOR INVESTIGATION AND CLEANUP OF DAMAGE
- SRM 51-10-2 FOR PROTECTIVE TREATMENT OF METALS
- SRM 51-20-4 FOR SEALING OF REPAIRS
- SRM 51-30-0 FOR FASTENER CODE, REMOVAL, INSTALLATION, HOLE SIZES, EDGE MARGINS, AND SUBSTITUTION.

[A] WHERE LOCKBOLTS WERE INITIALLY FITTED, SIMILAR TYPE FASTENERS CAN BE USED. WHERE RIVETS WERE INITIALLY FITTED, USE 1/32 INCH OVERSIZE BACB30MY HEX-DRIVE BOLT WITH BACC30R COLLAR.

[B] THIS REPAIR IS APPLICABLE TO STIFFENERS MACHINED FROM BAC1506-1740 WITHOUT REINFORCING STRAPS. SEE FIGURE 8 FOR A REPAIR FOR STIFFENERS WITH REINFORCING STRAPS.

[C] 7075-0 HT-T6 MAY BE USED AS A SUBSTITUTE.

FASTENER SYMBOLS

┼ INITIAL FASTENER LOCATION. [A]

✦ REPAIR FASTENER LOCATION. INSTALL A BACB30FM8 OR BACB30MY8 FASTENER.

REPAIR MATERIAL			
PART		QTY	MATERIAL
1	ANGLE	1	0.040 INCH THICK 7178-0 HT-T6 [C]
2	ANGLE	1	0.040 INCH THICK 7178-0 HT-T6 [C]
3	ANGLE	1	0.040 INCH THICK 7178-0 HT-T6 [C]
4	ANGLE	1	0.040 INCH THICK 7178-0 HT-T6 [C]
5	ANGLE	1	0.071 INCH THICK 7178-0 HT-T6 [C]
6	ANGLE	1	0.071 INCH THICK 7178-0 HT-T6 [C]
7	FILLER	1	SAME AS THE INITIAL EXTRUSION

TABLE I

Wing Center Section Upper Surface Stiffener Repair
Figure 4 (Sheet 1)

BOEING PROPRIETARY - Copyright © - Unpublished Work - See title page for details.

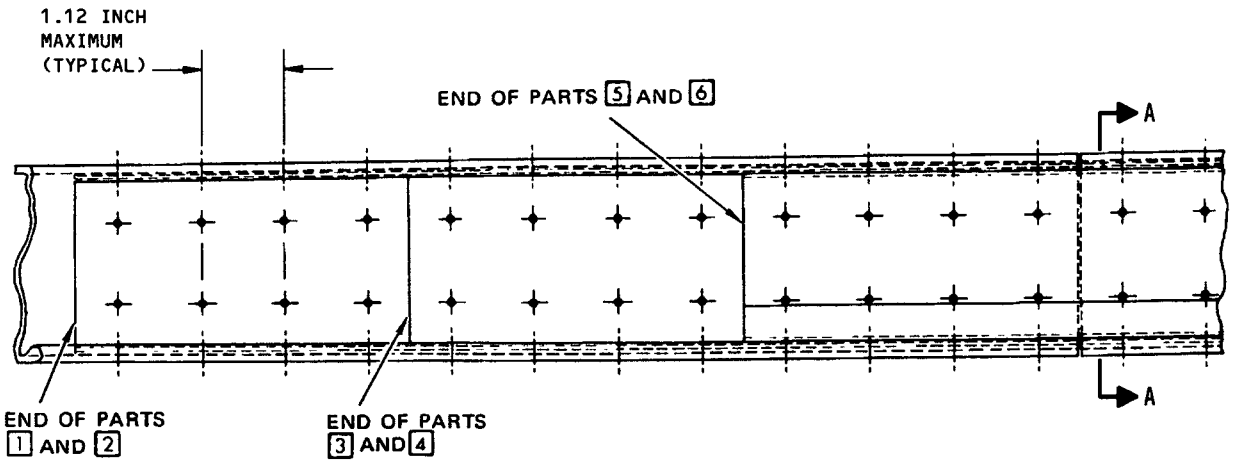

REPAIR SIMILAR ON EACH SIDE OF DAMAGE
DETAIL I

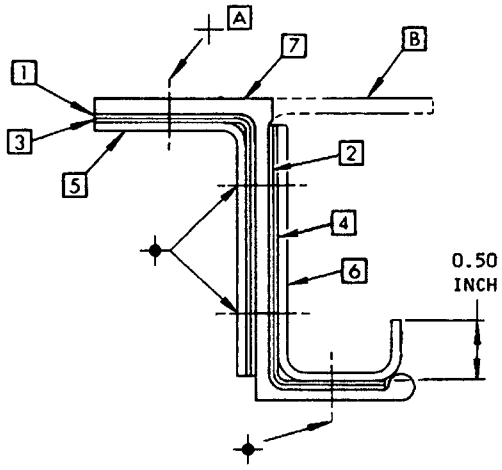

SECTION A-A

Wing Center Section Upper Surface Stiffener Repair
Figure 4 (Sheet 2)

BOEING PROPRIETARY - Copyright © - Unpublished Work - See title page for details.

APPLICABILITY

USE THIS REPAIR IF THE INITIAL FLANGE THICKNESS IS EQUAL TO OR LESS THAN 0.25 INCH. IF THE INITIAL FLANGE THICKNESS IS THICKER THAN 0.25 INCH USE THE REPAIR IN FIGURE 6.

THIS REPAIR CAN BE USED ON A TAPERED STIFFENER IF THE TAPER IS GRADUAL AND CONTINUOUS. USE THE THICKEST END OF THE STIFFENER, AT THE CUT LOCATION, TO CALCULATE THE THICKNESS OF THE REPAIR PARTS.

REPAIR INSTRUCTIONS

WARNING: MAKE SURE THE FUEL IS REMOVED FROM THE TANKS AND THE TANKS ARE SUPPLIED WITH A GOOD FLOW OF AIR. FUEL VAPORS ARE HAZARDOUS AND EXPLOSIVE. REFER TO AMM 28-10 BEFORE YOU ENTER THE FUEL TANKS.

CAUTION: MAKE THE WING STABLE IF TWO OR MORE STIFFENERS IN THE SAME AREA ARE TO BE REPAIRED. REFER TO SRM 51-50-1 FOR SUPPORT OF THE WING IN THE JIG POSITION. IF ONE STIFFENER IS TO BE REPAIRED, IT IS NOT NECESSARY TO MAKE THE WING STABLE.

1. Get access to the damaged area.
2. Remove the fasteners in the repair area. Refer to SRM 51-30.
3. Cut and remove the damaged part of the stiffener.
4. Make the repair parts. Refer to Table I and the Sample Calculations given in Detail II.
5. Temporarily assemble the repair parts and drill the fastener holes. Make sure to drill the fastener holes common to the wing skin panel to the correct size for cold working. Refer to SRM 51-30-9.
6. Cold work the initial fastener holes. Use the high interference method. Refer to SRM 51-30-9.
7. Disassemble the repair parts.
8. Remove the nicks, scratches, gouges, burrs, and sharp edges from the repair parts and the initial parts.
9. Apply a chemical conversion coating to the repair parts and to the bare surfaces of the initial parts. Refer to SRM 51-10-2.
10. Apply one layer of BMS 10-20, Type II primer to the repair parts and to the bare surfaces of the initial parts. Refer to SOPM 20-41-02.
11. Keep the pull-up limit to a maximum of 0.005 inch. If shims are necessary, refer to SRM 51-20-1.
12. Apply one layer BMS 5-26, Type II sealant to the mating surfaces. Refer to SRM 51-20-4.
13. Install the repair parts.
14. Install the fasteners wet with BMS 5-26 Type II sealant in transition fit holes.
15. Apply BMS 5-26, Type II sealant to make a fillet seal around the repair parts. Make a cap seal to the fasteners that go through the skin. Refer to AMM 28-11-0.
16. Apply one layer of BMS 10-20, Type II primer to the sealant. Apply the primer only after the sealant is not tacky. Refer to SRM 51-20-4.
17. Apply a finish to the repair area. Refer to AMM 51-21.

NOTES

- THIS REPAIR WILL HAVE AN EFFECT ON THE STRUCTURAL SIGNIFICANT ITEM (SSI):
  - NUMBER W-6 WHEN INSTALLED AT THE CENTER WING; BUT THE INSPECTION ALTERNATIVES OF THE ADJACENT SKIN ARE STILL APPLICABLE
  - NUMBER W-40 WHEN INSTALLED IN THE DRY BAY BETWEEN WBL 157 AND WBL 227; BUT THE INSPECTION ALTERNATIVES OF THE SKIN ARE STILL APPLICABLE
  - NUMBER W-42 WHEN INSTALLED FORWARD OF THE DRY BAY BETWEEN 157 AND WBL 227. BUT, THE EXTERNAL INSPECTION ALTERNATIVES OF SKIN AND STRINGER AND INTERNAL INSPECTION ALTERNATIVE OF THE ADJACENT SKIN ARE STILL APPLICABLE.
- DO THE INSPECTIONS FOR W-6, W-40 AND W-42 IN THE REPAIRED AREA AT THE SUBSEQUENT SUPLEMENTAL STRUCTURAL INSPECTION DOCUMENT (SSID) INSPECTION ON THIS AIRPLANE BEFORE YOU REACH 66,000 CYCLES AFTER INSTALLATION OF THE REPAIR. REFER TO SRM 51-00-4, FIGURE 3 FOR APPLICABLE SSI DATA.
- D = FASTENER DIAMETER.
- ALL DIMENSIONS ARE IN INCHES UNLESS SHOWN DIFFERENTLY.
- MAINTAIN 2D EDGE MARGIN.
- WHEN YOU USE THIS REPAIR REFER TO :
  - AMM 28-11-0 FOR FUEL TANK SEALING
  - SOPM 20-41-02 FOR APPLICATION OF FINISHES
  - SRM 51-00-4 FOR A LIST OF STRUCTURALLY SIGNIFICANT ITEMS (SSID DETAILS)
  - SRM 51-10-1 FOR INVESTIGATION AND CLEANUP OF DAMAGE
  - SRM 51-10-2 FOR PROTECTIVE TREATMENT OF METALS
  - SRM 51-20-1 FOR SHEET METAL MATERIALS
  - SRM 51-20-4 FOR REPAIR SEALING
  - SRM 51-30 FOR FASTENER CODES, INSTALLATION AND REMOVAL, HOLE SIZES, EDGE MARGINS AND SUBSTITUTION.

Typical Wing Lower Surface Z Stiffener Repair with Formed Angles
Figure 5 (Sheet 1)

BOEING PROPRIETARY - Copyright © - Unpublished Work - See title page for details.

NOTES

A DO NOT COUNTERSINK THE FASTENER HOLES IN THE SKIN MORE THAN 2/3 OF THE SKIN THICKNESS. THIS PRECAUTION WILL PREVENT KNIFE-EDGING OF THE SKIN

B MACHINE THE FILLER FROM THE SAME EXTRUSION AS THE INITIAL STIFFENER. AS AN ALTERNATIVE, MACHINE THE FILLER FROM AVAILABLE BAR STOCK. THE COMPLETED FILLER MUST HAVE THE SAME DIMENSIONS AS THE INITIAL STIFFENER. 2024-T3 IS PERMITTED AS AN OPTIONAL MATERIAL

C EACH LEG OF THE INITIAL STIFFENER, AT THE CUT LOCATION, MUST BE ATTACHED TO REPAIR MATERIAL THAT IS A MINIMUM OF 1.10 TIMES THE AREA OF THE LEG. REFER TO THE SAMPLE CALCULATIONS. IT IS ALSO NECESSARY THAT ANGLE 3 AND 4 MUST BE EQUAL OR GREATER IN THICKNESS THAN ANGLE 1 AND 2. ALSO, ANGLE 5 AND 6 MUST BE EQUAL OR GREATER IN THICKNESS THAN ANGLE 3 AND 4

D TO FIND THE NUMBER OF NECESSARY FASTENERS FOR EACH FLANGE, REFER TO TABLE II AND THE SAMPLE CALCULATIONS. A MINIMUM OF FOUR FASTENERS IN THIS AREA ARE NECESSARY THROUGH THE VERTICAL FLANGE OF ANGLES 5 AND 6

E REFER TO 51-20 FOR THE MINIMUM INSIDE BEND RADII

F BEND THE REPAIR ANGLES IN THE ANNEALED CONDITION AND THEN HEAT TREAT TO THE SPECIFICATION SHOWN

G WHERE EDGE MARGINS DO NOT PERMIT THE USE OF 5/16 OR 1/4 DIA. FASTENERS, 3/16 DIA FASTENERS CAN BE USED. REFER TO TABLE II AND THE SAMPLE CALCULATIONS GIVEN IN DETAIL II FOR THE NUMBER OF NECESSARY FASTENERS

H ANGLE 3 AND 4 SHOULD HAVE 2 FASTENERS MORE THROUGH EACH FLANGE THAN ANGLE 5 AND 6. ANGLE 1 AND 2 SHOULD HAVE 2 FASTENERS MORE THROUGH EACH FLANGE THAN ANGLE 3 AND 4

Typical Wing Lower Surface Z Stiffener Repair with Formed Angles
Figure 5 (Sheet 2)

BOEING PROPRIETARY - Copyright © - Unpublished Work - See title page for details.

FASTENER SYMBOLS

- INITIAL FASTENER LOCATION. INSTALL A 1/32 OVERSIZE BACB30NY()K()Y HEX-DRIVE BOLT WITH A BACC30AC COLLAR
- REPAIR FASTENER LOCATION. INSTALL A BACB30MY()K HEX-DRIVE BOLT WITH A BACC30AG() OR BACC30M() COLLAR

REPAIR MATERIAL			
PART		QTY	MATERIAL
1	ANGLE	1	0.040 TO 0.063 2024-0 HT TR TO -T42 [C] [E] [F]
2	ANGLE	1	0.040 TO 0.063 2024-0 HT TR TO -T42 [C] [E] [F]
3	ANGLE	1	0.050 TO 0.090 2024-0 HT TR TO -T42 [C] [E] [F]
4	ANGLE	1	0.050 TO 0.090 2024-0 HT TR TO -T42 [C] [E] [F]
5	ANGLE	1	0.063 TO 0.125 2024-0 HT TR TO -T42 [C] [E] [F]
6	ANGLE	1	0.063 TO 0.125 2024-0 HT TR TO -T42 [C] [E] [F]
7	FILLER	1	SAME AS THE INITIAL STIFFENER [B]

TABLE I

GAGE OF ANGLE 5 AND 6	MINIMUM NUMBER OF FASTENERS PER INCH OF FLANGE WIDTH		
	3/16 DIA	1/4 DIA	5/16 DIA
0.063	3.8	2.9	2.4
0.071	3.8	2.9	2.4
0.080	3.8	2.9	2.4
0.090	3.8	2.9	2.4
0.100	3.8	2.9	2.4
0.112	3.8	2.9	2.4
0.125	3.8	2.9	2.4

TABLE II

Typical Wing Lower Surface Z Stiffener Repair with Formed Angles
Figure 5 (Sheet 3)

BOEING PROPRIETARY - Copyright © - Unpublished Work - See title page for details.

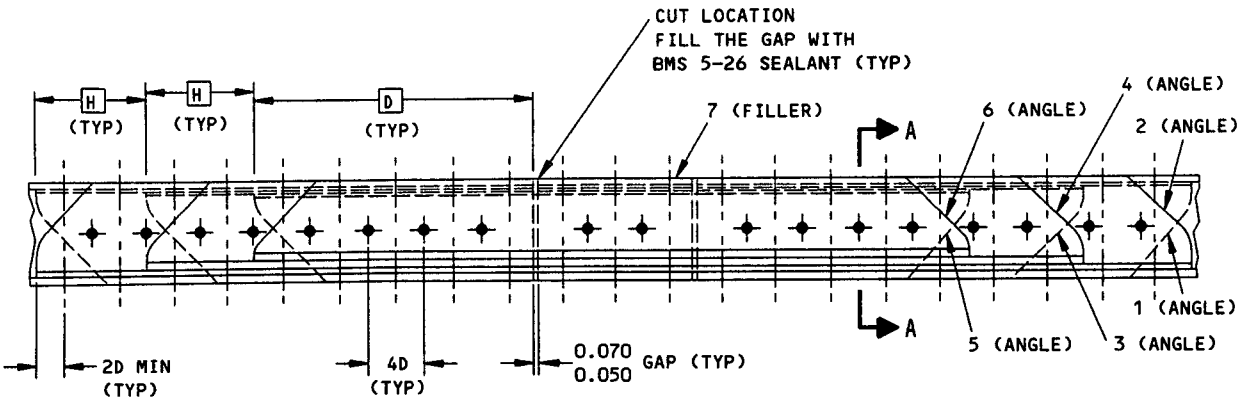

LOWER SKIN NOT SHOWN
DETAIL I

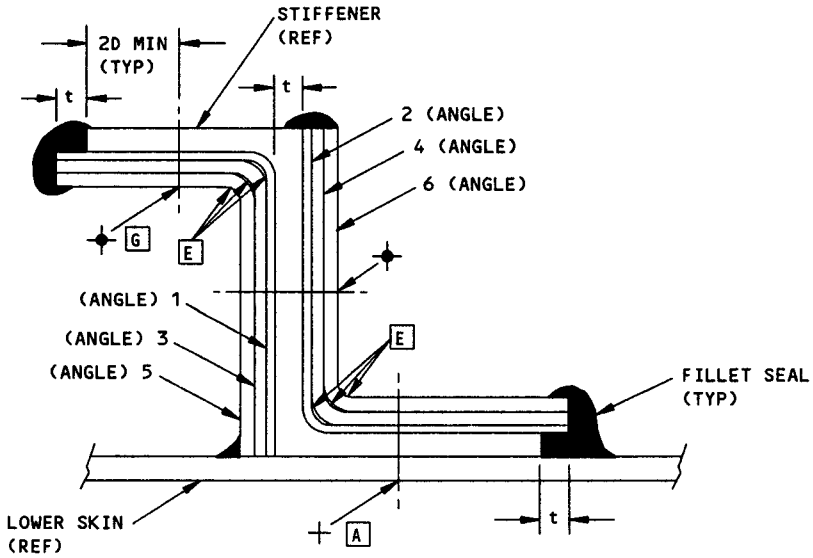

SECTION A-A

Typical Wing Lower Surface Z Stiffener Repair with Formed Angles
Figure 5 (Sheet 4)

BOEING PROPRIETARY - Copyright © - Unpublished Work - See title page for details.

SAMPLE CALCULATION:

1. Measure the dimensions of the initial stiffener.

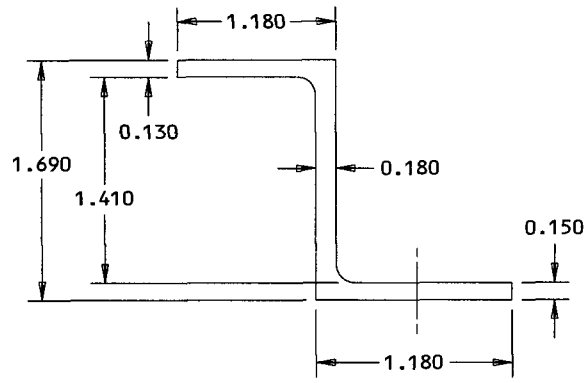

SAMPLE DIMENSIONS

2. Calculate the area of the flanges and the web. Ignore the area in the radiused corners.

Bottom Flange	1.18 X 0.150 = 0.177 sq in.
Web	1.41 X 0.180 = 0.254 sq in.
Top Flange	1.18 X 0.130 = 0.153 sq in.

3. Find the gages of the repair parts that give an area 1.10 times greater than that of the initial stiffener. The recommended procedure to start the calculations is to use the minimum thicknesses of the repair angles in Table I. Increase these values until the sum of the thicknesses is greater than or equal to the total necessary thickness that has been calculated. The final thicknesses of the repair angles must agree with the specifications shown in [C].

EXAMPLE:

BOTTOM FLANGE - The total necessary area for the lower leg of the repair parts is: 0.177 X 1.10 = 0.195 sq in.

The total necessary thickness is:
0.195/1.180 = 0.165.

Sum the minimum thicknesses for Angles 2,4, and 6.

0.040 + 0.050 + 0.063 = 0.153*

* This value is less than what is necessary. Adjust the thickness of the angles to get the total necessary thickness of 0.165. This can be done by increasing the thickness of Angle 6 to 0.080.

0.040 + 0.050 + 0.080 = 0.170

This can also be done by increasing the thickness of Angle 2 and 4.

0.050 + 0.063 + 0.063 = 0.176

One of the two of these procedures can be used. Make sure the thicknesses of the angles agrees with the specifications in [C].

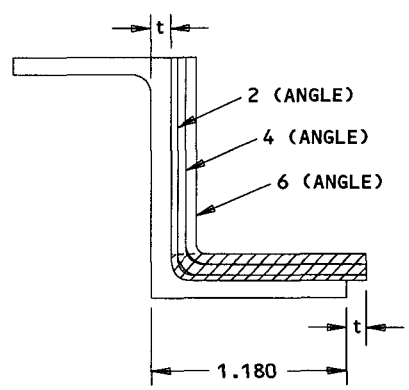

Thus, the thicknesses of the repair parts for bottom flange can be:

Angle 2	0.040	or	Angle 2	0.050
Angle 4	0.050		Angle 4	0.063
Angle 6	0.080		Angle 6	0.063

DETAIL II

Typical Wing Lower Surface Z Stiffener Repair with Formed Angles
Figure 5 (Sheet 5)

BOEING PROPRIETARY - Copyright © - Unpublished Work - See title page for details.

TOP FLANGE - Use an equivalent procedure to find the thickness of Angles 1,3, and 5.

The total necessary area is:
0.153 X 1.10 = 0.169 sq in.

The total necessary thickness is:
0.169/1.180 = 0.143

Sum the minimum thicknesses of Angles 1,3, and 5:

0.040 + 0.050 + 0.063 = 0.153

Thus, the minimum thicknesses for Angles 1,3, and 5 will be used because their sum is greater than the total necessary thickness.

The thicknesses of the repair parts for the top flange are:

Angle 1	0.040
Angle 3	0.050
Angle 5	0.063

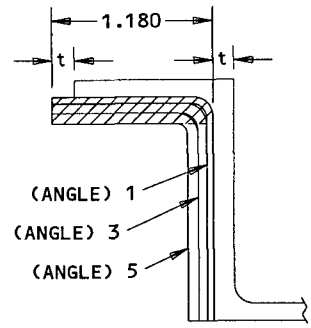

WEB - The total necessary area for the web repair parts is:
0.254 X 1.10 = 0.297 sq in.

The thicknesses of Angles 1 thru 6 and the sum of their areas are:

Angle	Thickness		Leg Width		Area (sq in.)
1	0.040	X	1.560	=	0.062
2	0.040	X	1.540	=	0.062
3	0.050	X	1.560	=	0.078
4	0.050	X	1.540	=	0.077
5	0.063	X	1.560	=	0.098
6	0.080	X	1.540	=	0.123
Total Area					0.500 sq in.

Thus, the thickness for Angles 1 through 6 is sufficient.

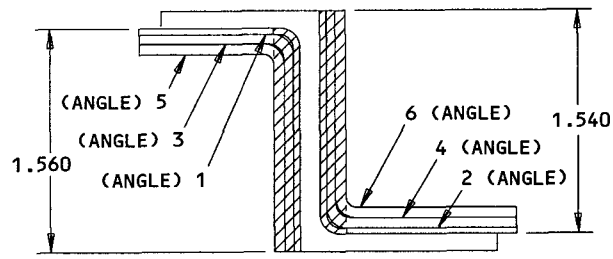

4. Find the number of necessary fasteners for each flange of Angles 5 and 6. Refer to Table II.

EXAMPLE:

ANGLE 5 - To find the number of necessary fasteners in the flanges of Angle 5, go to Table II. Multiply the number found in the column, by the width of the flange of the repair part. Round the result to the next higher whole number.

The number of fasteners in the upper flange of Angle 5 is:

3.8 X 1.18 = 4.484 or five 3/16 diameter fasteners.

2.9 X 1.18 = 3.422 or four 1/4 diameter fasteners.

2.4 X 1.18 = 2.832 or three 5/16 diameter fasteners.

The number of fasteners in the vertical flange of Angle 5 is:

3.8 X 1.560 = 5.928 or six 3/16 diameter fasteners.

2.9 X 1.560 = 4.524 or five 1/4 diameter fasteners.

2.4 X 1.560 = 3.744 or four 5/16 diameter fasteners.

DETAIL II (CONTINUED)

Typical Wing Lower Surface Z Stiffener Repair with Formed Angles
Figure 5 (Sheet 6)

BOEING PROPRIETARY - Copyright © - Unpublished Work - See title page for details.

APPLICABILITY

USE THIS REPAIR IN THE AREAS WHERE THE STRINGER HAS A CONSTANT THICKNESS OR TAPER. DO NOT USE THIS REPAIR IN THE PADDED STRINGER AREAS. IF THE INITIAL FLANGE THICKNESS IS NOT MORE THAN 0.25 INCH, YOU CAN ALSO USE THE REPAIR SHOWN IN FIGURE 5.

REPAIR INSTRUCTIONS

WARNING: MAKE SURE THE FUEL IS REMOVED FROM THE TANKS AND THE TANKS ARE SUPPLIED WITH A GOOD FLOW OF AIR. FUEL VAPORS ARE HAZARDOUS AND EXPLOSIVE. REFER TO AMM 28-11 BEFORE ENTERING THE FUEL TANKS.

CAUTION: MAKE THE WING STABLE IF TWO OR MORE STIFFENERS IN THE SAME AREA ARE TO BE REPAIRED. REFER TO SRM 51-50-1 FOR SUPPORT OF THE WING IN THE JIG POSITION. IF ONE STIFFENER IS TO BE REPAIRED, IT IS NOT MANDATORY TO MAKE THE WING STABLE.

1. Get access to the damaged area.
2. Cut and remove the damaged part of the stiffener. Refer to Detail I.
3. Use the maximum thickness of the damaged stiffener section to calculate the dimensions of the repair parts. When you calculate the length of the repair parts from the fastener requirements given in Details I and II, you can adjust the repair fastener spacing locally to avoid interference with the fasteners in adjacent rows. Refer to Detail III for the sample calculation.
4. Make the repair parts. Refer to Table I.
5. Assemble the repair parts and drill the fastener holes.
6. Disassemble the repair parts.
7. Remove all nicks, scratches, gouges, burrs and sharp edges from the stiffener and the repair parts.
8. Apply a chemical conversion coating to the repair parts and the bare surfaces of the initial parts. Refer to SRM 51-10-2.
9. Apply one layer of BMS 10-20, Type II primer to the repair parts and to the bare surfaces of the initial parts. Refer to SOPM 20-41-02.
10. Install the repair parts with BMS 5-26, Type II sealant between the mating surfaces. Refer to SRM 51-20-4.
11. Keep the pull-up limit to a maximum of 0.005 inch. If shims are necessary, refer to SRM 51-20-1.
12. Install fasteners wet with BMS 5-26, Type II sealant in transition fit holes.
13. Apply a fillet seal with BMS 5-26, Type II sealant as given in AMM 28-11-0.
14. Apply a cap seal with BMS 5-26, Type II sealant to the fasteners that go through the skin. Refer to AMM 28-11-0.
15. Apply a layer of BMS 10-20, Type II primer to the sealant. Apply the primer only after the sealant is not tacky. Refer to SRM 51-20-4.
16. Apply finish to the repair area as necessary. Refer to AMM 51-21.

NOTES

- THIS REPAIR WILL HAVE AN EFFECT ON THE STRUCTURAL SIGNIFICANT ITEM (SSI):
  - NUMBER W-6 WHEN INSTALLED AT THE CENTER WING; BUT, THE INSPECTION ALTERNATIVES OF THE ADJACENT SKIN ARE STILL APPLICABLE.
  - NUMBER W-40 WHEN INSTALLED IN THE DRY BAY BETWEEN WBL 157 AND WBL 227; BUT, THE INSPECTION ALTERNATIVES OF THE SKIN ARE STILL APPLICABLE.
  - NUMBER W-42 WHEN INSTALLED FORWARD OF THE DRY BAY BETWEEN WBL 157 AND WBL 227. BUT, THE EXTERNAL INSPECTION ALTERNATIVES OF SKIN AND STRINGER AND INTERNAL INSPECTION ALTERNATIVE OF THE ADJACENT SKIN ARE STILL APPLICABLE.

  DO THE INSPECTIONS FOR W-6, W-40 AND W-42 IN THE REPAIRED AREA AT THE SUBSEQUENT SUPPLEMENTAL STRUCTURAL INSPECTION DOCUMENT (SSID) INSPECTION ON THIS AIRPLANE PRIOR TO REACHING 50,000 CYCLES AFTER INSTALLATION OF THE REPAIR. REFER TO SRM 51-00-4, FIG. 3 FOR APPLICABLE SSI DATA.
- ALL DIMENSIONS ARE IN INCHES.
- D = DIAMETER OF THE REPAIR FASTENER.
- WHEN YOU DO THIS REPAIR, REFER TO:
  - AMM 28-11-0 FOR FUEL TANK SEALING
  - AMM 51-21-0 FOR INTERIOR AND EXTERIOR FINISHES
  - SRM 51-10-1 FOR INTVESTIGATION AND CLEANUP OF DAMAGE
  - SRM 51-10-2 FOR PROTECTIVE TREATMENT OF METALS
  - SRM 51-20-4 FOR SEALING OF REPAIRS
  - SRM 51-30-0 FOR FASTENER CODE, REMOVAL, INSTALLATION, HOLE SIZES, EDGE MARGINS AND SUBSTITUTIONS.

Typical Wing Lower Surface Z Stiffener Repair with Machined Angles
Figure 6 (Sheet 1)

BOEING PROPRIETARY - Copyright © - Unpublished Work - See title page for details.

[A] CALCULATE MINIMUM FASTENER REQUIREMENTS FROM TABLE II.

[B] CALCULATE MINIMUM FASTENER REQUIREMENTS FROM TABLE II. USE BACB30FM HEX DRIVE FASTENER.

[C] TAPER MUST NOT BE GREATER THAN 1 TO 30.

[D] INSTALL THE FASTENERS AT THE TAPERED SECTION WITH TAPERED FILLERS FOR PROPER SEATING.

[E] MAKE THE BEND RADIUS THE SAME AS THE STIFFENER RADIUS OR BIGGER.

FASTENER SYMBOLS

+ INITIAL FASTENER LOCATION. INSTALL A 1/32 INCH OVERSIZE BACB30NY()K()Y HEX DRIVE BOLT WITH A BACC30AC COLLAR

⊕ REPAIR FASTENER LOCATION.INSTALL A BACB30MY()K HEX DRIVE BOLT WITH A BACC30AG() OR BACCC30M() COLLAR.

REPAIR MATERIAL			
PART		QTY	MATERIAL
1	ANGLE	1	2024-T351 MACHINED BAR
2	ANGLE	1	2024-T351 MACHINED BAR
3	FILLER	1	SAME AS ORIGINAL EXTRUSION

TABLE I

Typical Wing Lower Surface Z Stiffener Repair with Machined Angles
Figure 6 (Sheet 2)

BOEING PROPRIETARY - Copyright © - Unpublished Work - See title page for details.

2/3 X MAXIMUM THICKNESS OF FLANGE OF REPAIR ANGLES	NUMBER OF FASTENERS NECESSARY PER SQUARE INCH OF CROSS SECTIONAL AREA. (MULTIPLY BY AREA OF EACH FLANGE OF REPAIR ANGLES TO CALCULATE ACTUAL NUMBER OF FASTENERS. REFER TO DETAIL II.			
	3/16 DIA	1/4 DIA	5/16 DIA	3/8 DIA
UP TO .08	55.3	41.6	38.4	27.7
OVER .08 TO .09	49.2	36.9	29.5	24.6
OVER .09 TO .100	43.7	32.8	26.3	21.9
OVER .100 TO .112	39.5	29.6	23.7	19.7
OVER .112 TO .125	35.2	26.4	21.1	17.6
OVER .125 TO .140	31.5	24.6	18.9	15.8
OVER .140 TO .160	28.2	21.1	16.9	14.1
OVER .160 TO .180	24.6	18.5	14.8	12.3
OVER .180 TO .200	23.7	16.4	13.2	11.0
OVER .200 TO .224	23.7	14.8	11.8	9.9
OVER .224 TO .250	23.7	13.4	10.6	8.8
OVER .250 TO .312	23.7	13.4	9.5	7.9
OVER .312 TO .375	23.7	13.4	8.5	6.3
OVER .375	23.7	13.4	8.5	5.9

TABLE II

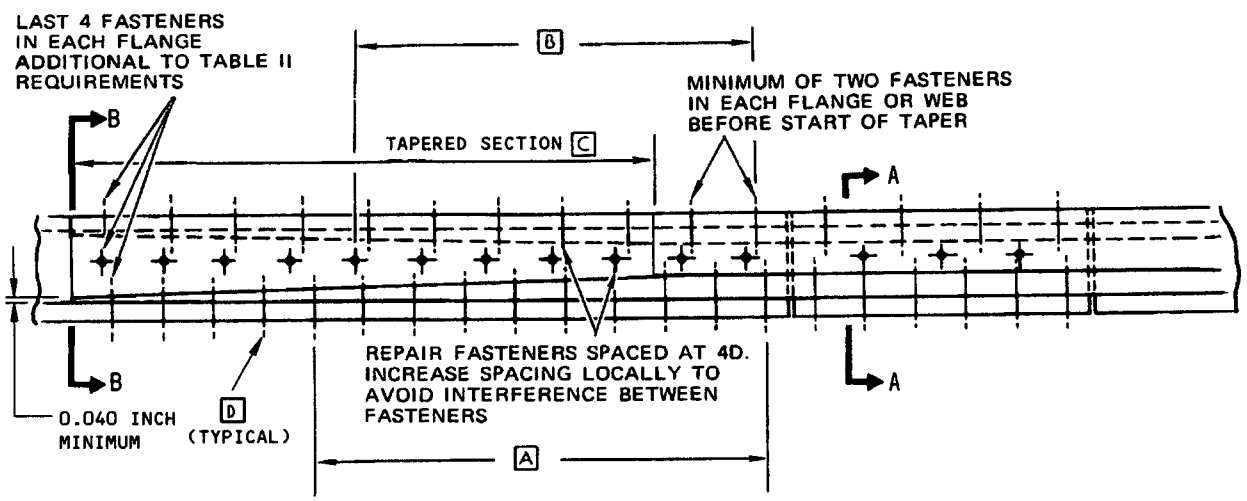

DETAIL I

Typical Wing Lower Surface Z Stiffener Repair with Machined Angles
Figure 6 (Sheet 3)

BOEING PROPRIETARY - Copyright © - Unpublished Work - See title page for details.

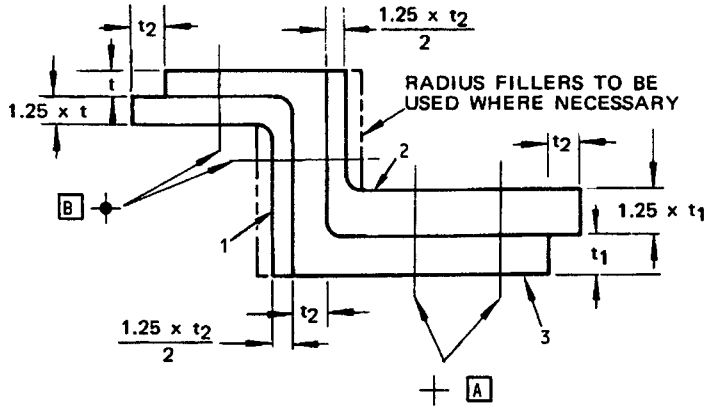

SECTION THROUGH REPAIR IN UNTAPERED AREA
(t, t_1 AND t_2 ARE THE MAXIMUM THICKNESSES
OF THE PORTION OF STRINGER REMOVED)

SECTION A-A

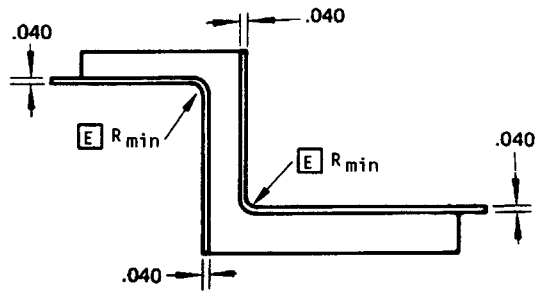

SECTION AT END
OF REPAIR

SECTION B-B

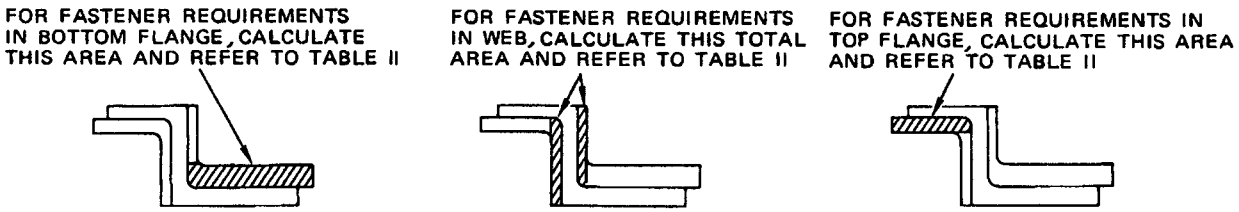

METHOD TO CALCULATE FASTENER REQUIREMENTS

DETAIL II

Typical Wing Lower Surface Z Stiffener Repair with Machined Angles
Figure 6 (Sheet 4)

BOEING PROPRIETARY - Copyright © - Unpublished Work - See title page for details.

SAMPLE CALCULATION

1. FIND THE INITIAL STIFFENER DIMENSIONS AS SHOWN HERE:

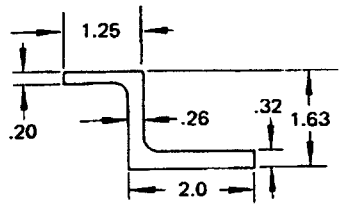

2. FIND THE THICKNESS OF REPAIR FLANGES, AS SHOWN IN DETAIL I, SECTION A-A:

BOTTOM FLANGE	1.25	X	.32	=	.400 INCH
TOP FLANGE	1.25	X	.20	=	.25 INCH
WEB FLANGES	1.25 / 2	X	.26	=	.165 INCH

3. FIND THE AREA OF REPAIR FLANGES, REFER TO DETAIL II.

BOTTOM FLANGE	.400	X	2.0	=	.800 SQUARE INCH
TOP FLANGE	.25	X	1.25	=	.313 SQUARE INCH
WEB FLANGES	((1.63-0.32) X 0.165) + ((1.63 X -0.2) X 0.165) = 0.452 SQUARE INCH				

4. MULTIPLY REPAIR FLANGES THICKNESSES BY 2/3.

BOTTOM FLANGE	.400	X	2/3	=	.254 INCH
TOP FLANGE	.250	X	2/3	=	.165 INCH
WEB FLANGES	.330	X	2/3	=	.218 INCH

DETAIL III

Typical Wing Lower Surface Z Stiffener Repair with Machined Angles
Figure 6 (Sheet 5)

BOEING PROPRIETARY - Copyright © - Unpublished Work - See title page for details.

5. FIND THE NUMBER OF FASTENERS NECESSARY FROM TABLE II.

BOTTOM FLANGE — FOR A 2/3 REPAIR FLANGE THICKNESS (0.254 INCH) AND FOR A 5/16 INCH DIAMETER INITIAL FASTENER, 9.5 FASTENERS PER SQUARE INCH ARE NECESSARY. ACTUAL REQUIREMENT IS 9.5 X .800 = EIGHT 5/16 INCH DIAMETER FASTENERS.

TOP FLANGE - FOR A 2/3 REPAIR FLANGE THICKNESS (0.165 INCH) AND FOR A 1/4 INCH DIAMETER REPAIR FASTENER, 18.5 FASTENERS PER SQUARE INCH ARE NECESSARY. ACTUAL REQUIREMENT IS 18.5 X .313 = SIX 1/4 INCH DIAMETER FASTENERS.

WEB FLANGE - FOR A 2/3 REPAIR FLANGE THICKNESS (0.218 INCH) AND FOR A 1/4 INCH DIAMETER REPAIR FASTENER, 14.8 FASTENERS PER SQUARE INCH ARE NECESSARY. ACTUAL REQUIREMENT IS 14.8 X .452 = SEVEN 1/4 INCH DIAMETER FASTENERS.

6. THE FASTENERS IN THE BOTTOM FLANGE ARE IN THE INITIAL FASTENER LOCATIONS AND IN TWO ROWS. THE LENGTH OF THE REPAIR ANGLES IS THEREFORE CONTROLLED BY THE NUMBER OF REPAIR FASTENERS IN THE WEB. THESE REPAIR FASTENERS MUST BE SPACED AT APPROXIMATELY 4D EXCEPT WHERE THE REPAIR FASTENER HEADS INTERFERE WITH THE INITIAL FASTENERS. THE LOCAL FASTENER SPACING CAN BE ADJUSTED TO AVOID INTERFERENCE. TAPER EACH FLANGE FROM 0.04 INCH MINIMUM AT THE END TO THE FULL THICKNESS BETWEEN THE SECOND AND THIRD FASTENERS FROM THE STIFFENER CUT LINE. INCREASE LENGTH OF THE REPAIR ANGLES, IF NECESSARY, TO GET A 1 TO 30 TAPER RATIO.

DETAIL III (CONTINUED)

Typical Wing Lower Surface Z Stiffener Repair with Machined Angles
Figure 6 (Sheet 6)

BOEING PROPRIETARY - Copyright © - Unpublished Work - See title page for details.

APPLICABILITY

DO NOT USE THESE REPAIRS IN AN AREA OF THE STIFFENER WHERE THE INITIAL LOWER HORIZONTAL FLANGE IS THICKER THAN 0.320 INCH. REFER TO DETAIL I OR DETAIL II TO FIND OUT WHICH REPAIR TO USE. G

REPAIR INSTRUCTIONS

WARNING: MAKE SURE THE FUEL IS REMOVED FROM THE TANKS AND THE TANKS ARE SUPPLIED WITH A GOOD FLOW OF AIR. FUEL VAPORS ARE HAZARDOUS AND EXPLOSIVE. REFER TO AMM 28-11 BEFORE ENTERING THE FUEL TANKS.

CAUTION: MAKE THE WING STABLE IF TWO OR MORE STIFFENERS IN THE SAME AREA ARE TO BE REPAIRED. REFER TO SRM 51-50-1 FOR SUPPORT OF THE WING IN THE JIG POSITION. IF ONE STIFFENER IS TO BE REPAIRED, IT IS NOT MANDATORY TO MAKE THE WING STABLE.

1. Get access to the damaged area.
2. Remove the fasteners in the repair area. Refer to SRM 51-30.
3. Cut and remove the damaged part of the stiffener. Make the cut line pass through the center of the rivet holes in both rows. These rivet holes will be used for the blocking fasteners. E
4. Make the repair parts given in Table I and shown in Details I or II as applicable.
5. Temporarily assemble the repair parts and drill the fastener holes. Make sure to drill the fastener holes common to the wing skin panel to the correct size for cold working. Refer to SRM 51-30-9.
6. Cold work the initial fastener holes. Use the high interference method. Refer to SRM 51-30-9.
7. Disassemble the repair parts.
8. Remove the nicks, scratches, gouges, burrs and sharp edges from the repair parts and the initial parts.
9. Make a radius of 0.015 to 0.030 on the sharp edges of the repair parts and the cut edges of the stiffener.
10. Apply a chemical conversion coating to the repair parts and to the bare surfaces of the initial parts. Refer to SRM 51-10-2.
11. Apply one layer of BMS 10-20, Type II primer to the repair parts and to the bare surfaces of the initial parts. Refer to SOPM 20-41-02.
12. Keep the pull-up limit to a maximum of 0.005. If the shims are necessary, refer to SRM 51-20-1.
13. Apply one layer BMS 5-26, Type II sealant to the mating surfaces. Refer to SRM 51-20-4.
14. Install the repair parts.
15. Install the fasteners wet with BMS 5-26, Type II sealant in transition fit holes.
16. Apply BMS 5-26, Type II sealant to make a fillet seal around the repair parts. Make a cap seal to the fasteners that go through the skin. Refer to AMM 28-11-0.
17. Apply one layer of BMS 10-20, Type II primer to the sealant. Apply the primer only after the sealant is not tacky. Refer to SRM 51-20-4.
18. Apply a finish to the repair area. Refer to AMM 51-21.

NOTES

- THIS REPAIR WILL HAVE AN EFFECT ON THE STRUCTURAL SIGNIFICANT ITEM (SSI) NUMBER W-8 WHEN INSTALLED IN THE CENTER WING SECTION. BUT, THE INTERNAL INSPECTION ALTERNATIVES OF THE ADJACENT SKIN ARE STILL APPLICABLE. DO THE INSPECTIONS FOR W-8 IN THE REPAIRED AREA AT THE SUBSEQUENT SUPPLEMENTAL STRUCTURAL INSPECTION DOCUMENT (SSID) INSPECTION ON THIS AIRPLANE BEFORE THE AIRPLANE GETS TO 60,000 CYCLES AFTER INSTALLATION OF THE REPAIR. REFER TO SRM 51-00-4, FIGURE 3 FOR APPLICABLE SSI DATA.
- D = FASTENER DIAMETER
- ALL DIMENSIONS ARE IN INCHES UNLESS SHOWN DIFFERENTLY
- MAINTAIN 2D EDGE MARGIN
- WHEN YOU DO THIS REPAIR, REFER TO:
  - AMM 28-11-0 FOR FUEL TANK SEALING
  - SOPM 20-41-02 FOR APPLICATION OF FINISHES
  - SRM 51-00-4 FOR A LIST OF STRUCTURALLY SIGNIFICANT ITEMS (SSID DETAILS)
  - SRM 51-10-1 FOR INVESTIGATION AND CLEANUP OF DAMAGE
  - SRM 51-10-2 FOR PROTECTIVE TREATMENT OF METALS
  - SRM 51-20-4 FOR REPAIR SEALING
  - SRM 51-20-1 FOR INSTALLATION OF SHIMS
  - SRM 51-20 FOR SHEET METAL MATERIALS
  - SRM 51-30 FOR FASTENER CODES, INSTALLATION AND REMOVAL, HOLES SIZES, EDGE MARGINS AND SUBSTITUTION.

Center Wing Lower Surface J Stiffener Repair
Figure 7 (Sheet 1)

BOEING PROPRIETARY - Copyright © - Unpublished Work - See title page for details.

NOTES (CONT)

[A] MAKE THE FILLER FROM THE SAME EXTRUSION AS THE INITIAL STIFFENER. AS AN ALTERNATIVE, MACHINE A FILLER FROM AVAILABLE BAR STOCK. THE COMPLETED FILLER MUST HAVE THE SAME DIMENSIONS AS THE INITIAL STIFFENER. 2024-T3 IS PERMITTED AS AN OPTIONAL MATERIAL.

[B] BEND THE REPAIR ANGLES IN THE ANNEALED CONDITION AND THEN HEAT TREAT TO THE GIVEN SPECIFICATION.

[C] THE PART 3 (ANGLE) AND 4 (CHANNEL) MUST HAVE A MINIMUM OF FOUR FASTENERS MORE THROUGH THE LOWER HORIZONTAL FLANGE THAN 5 (PLATE) AND 6 (PLATE).

[D] THE PART 1 (ANGLE) AND 2 (CHANNEL) MUST HAVE A MINIMUM OF FOUR FASTENERS MORE THROUGH THE VERTICAL AND LOWER HORIZONTAL FLANGES AND TWO FASTENERS MORE THROUGH THE UPPER HORIZONTAL FLANGE THAN THE PART 3 (ANGLE) AND 4 (CHANNEL).

[E] BLOCKING FASTENERS ARE USED TO PLUG THE REMAINING HOLES IN THE SKIN. USE THE SAME FASTENERS THAT ARE USED AT THE OTHER SKIN LOCATIONS.

[F] A MINIMUM OF FOUR FASTENERS IN THIS AREA ARE NECESSARY THROUGH THE UPPER HORIZONTAL FLANGE OF THE PART 3 (ANGLE) AND 4 (CHANNEL).

[G] USE THE REPAIR IN DETAIL I WHEN THERE IS SUFFICIENT CLEARANCE BETWEEN THE REPAIR PARTS AND THE STIFFENER CUT OUT. USE THE REPAIR IN DETAIL II ONLY IF THERE IS NOT SUFFICIENT CLEARANCE BETWEEN THE REPAIR PARTS AND THE STIFFENER CUTOUT.

[H] MAKE THE STIFFENER FROM THE SAME EXTRUSION AS THE INITIAL STIFFENER.

[I] IF DETAIL II IS USED, DOUBLE THE QUANTITY SHOWN.

[J] A MINIMUM OF SEVEN FASTENERS IN THIS AREA ARE NECESSARY THROUGH THE PART 5 (PLATE) AND 6 (PLATE).

[K] MAKE THE PLATE TO FIT THE INNER RADIUS OF THE ANGLE OR CHANNEL.

FASTENER SYMBOLS

REFERENCE FASTENER LOCATION.

INITIAL FASTENER LOCATION. INSTALL A 1/32 OVERSIZE BACB30NX()K()Y HEX-DRIVE BOLT WITH A BACC30AC COLLAR.

REPAIR FASTENER LOCATION. INSTALL A BACB30NX8K HEX-DRIVE BOLT WITH A BACC30X COLLAR.

INITIAL FASTENER LOCATION. [E] INSTALL A 1/32 OVERSIZE BACB30NX()K()Y HEX-DRIVE BOLT WITH A BACC30AC COLLAR.

REPAIR MATERIAL			
PART		QTY	MATERIAL
1	ANGLE	1 [I]	0.063 2024-0 [B] HT TR TO -T42
2	CHANNEL	1 [I]	0.063 2024-0 [B] HT TR TO -T42
3	ANGLE	1 [I]	0.080 2024-0 [B] HT TR TO -T42
4	CHANNEL	1 [I]	0.080 2024-0 [B] HT TR TO -T42
5	PLATE	1 [I]	0.224 2024-T42 [K]
6	PLATE	1 [I]	0.224 2024-T42 [K]
7	FILLER	1	SAME AS THE INITIAL STIFFENER [A]
8	STIFFENER	1	SAME AS THE INITIAL STIFFENER [H]

TABLE I

Center Wing Lower Surface J Stiffener Repair
Figure 7 (Sheet 2)

BOEING PROPRIETARY - Copyright © - Unpublished Work - See title page for details.

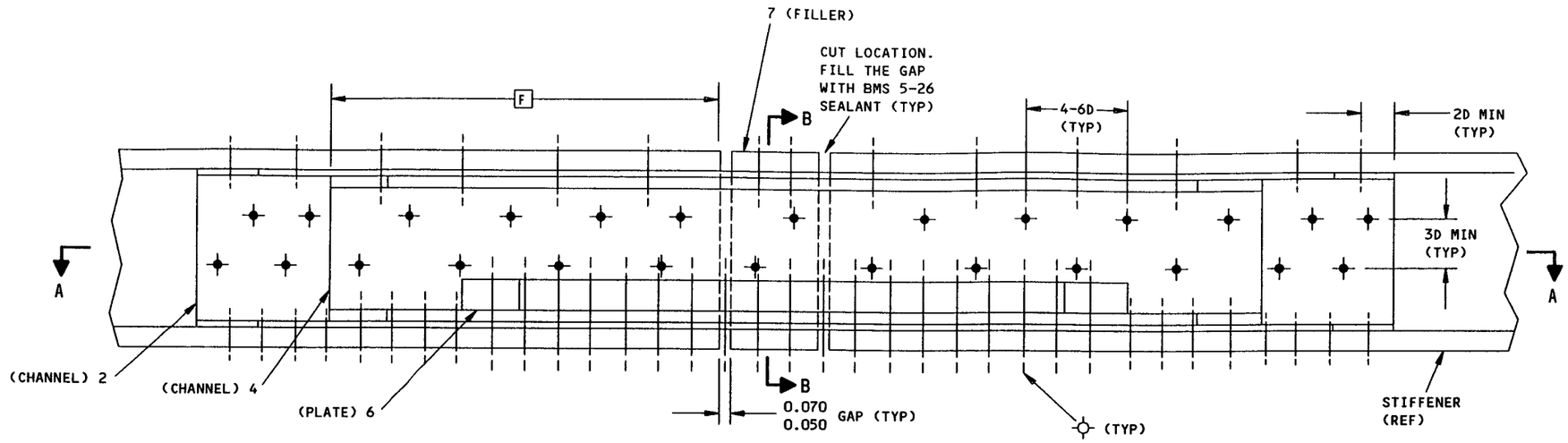

LOWER SKIN NOT SHOWN
TYPICAL STIFFENER REPAIR
DETAIL I G

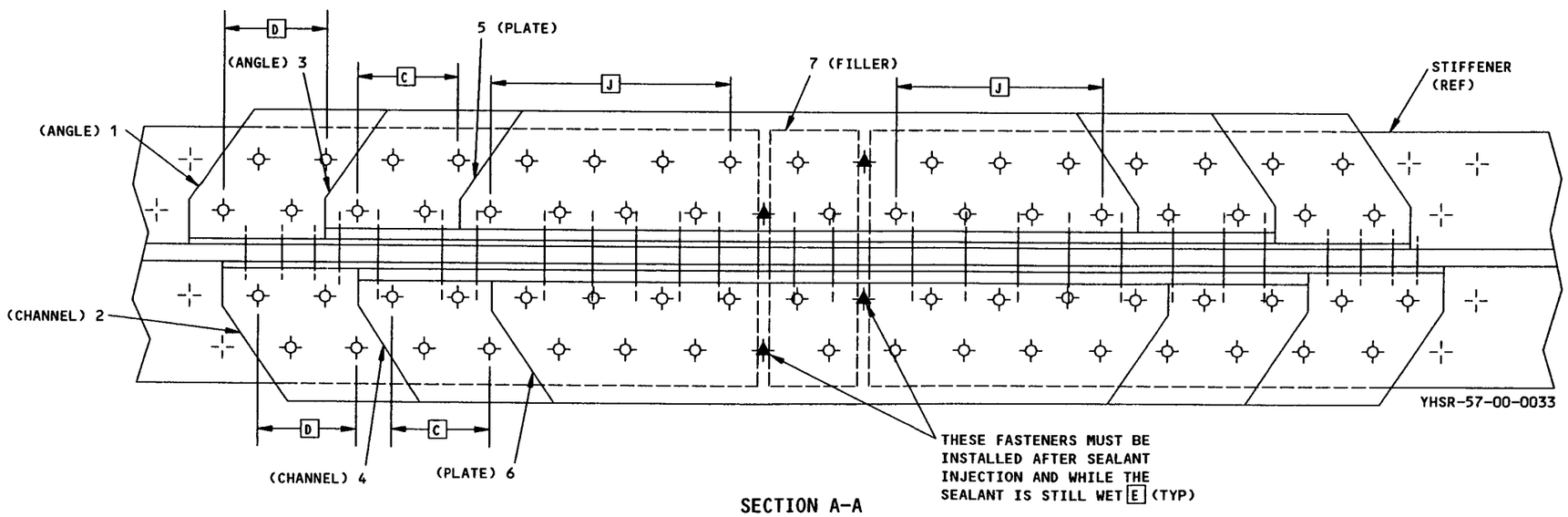

SECTION A-A

Center Wing Lower Surface J Stiffener Repair
Figure 7 (Sheet 3)

BOEING PROPRIETARY - Copyright © - Unpublished Work - See title page for details.

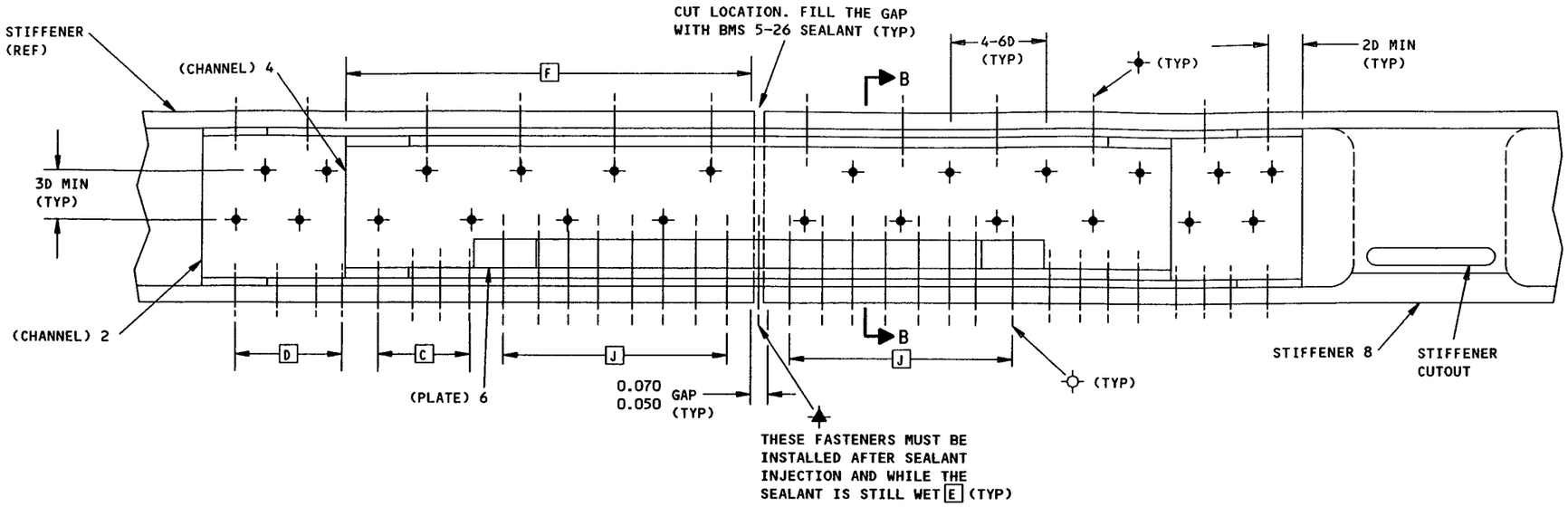

LOWER SKIN NOT SHOWN
STIFFENER SPLICE REPAIR
DETAIL II G

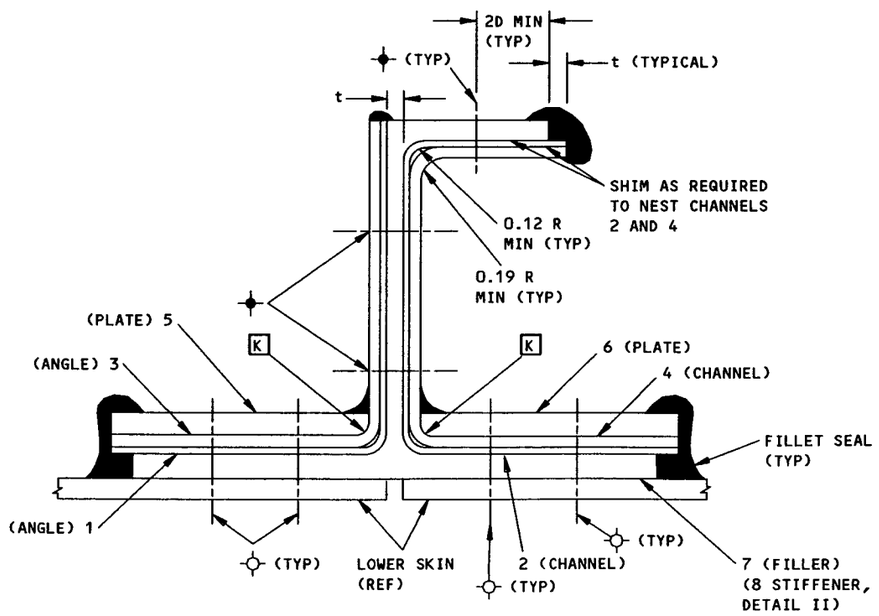

SECTION B-B

Center Wing Lower Surface J Stiffener Repair
Figure 7 (Sheet 4)

BOEING PROPRIETARY - Copyright © - Unpublished Work - See title page for details.

REPAIR INSTRUCTIONS

1. Gain access to the work area.

   WARNING: MAKE SURE THERE IS GOOD VENTILATION IN THE WORK AREA AS GIVEN IN THE MAINTENANCE MANUAL. IF YOU DO NOT, THE RESULT CAN BE INJURY TO PERSONNEL.

   CAUTION: SUPPORT OF THE WING IS NOT NECESSARY WHEN REPAIRING ONE STIFFENER. IF TWO OR MORE STIFFENERS IN THE SAME AREA ARE TO BE REPAIRED, DEFUELING AND SUPPORT OF THE STRUCTURE IN THE JIG POSITION AS GIVEN IN SRM 51-50-1 MUST BE DONE BEFORE YOU CUT STIFFENERS.

2. Cut and remove the damaged portion of the stiffener. Refer to Detail I where cut is permitted.
3. Make the repair parts given in Table I and shown in Detail II.
4. Assemble the repair parts.
5. Drill and ream the fastener holes.
6. Remove the repair parts.
7. Remove all nicks, scratches, burrs, and sharp edges from the initial and the repair parts.
8. Apply a chemical conversion coating to the repair parts and the bare surfaces of the initial parts. Refer to SRM 51-10-2.
9. Apply BMS 10-20, Type II primer to the repair parts and the bare surfaces of the initial parts.
10. Install the repair parts with BMS 5-26, Type II sealant between the mating surfaces. Refer to SRM 51-20-4, Paragraph 9.
11. Install the fasteners wet with BMS 5-26, Type II sealant.
12. Apply a fillet seal with BMS 5-26, Type II sealant along the edges of the repair parts.
13. Apply the finish. Refer to AMM 51-21.

NOTES

- THIS REPAIR COULD HAVE AN EFFECT ON A STRUCTURALLY SIGNIFICANT ITEM (SSI) GIVEN IN SRM 51-00-4, FIG. 3; BUT, NO CHANGE TO THE SUPPLEMENTAL STRUCTURAL INSPECTION DOCUMENT (SSID) INSPECTION PROGRAM IS NECESSARY.
- ALL DIMENSIONS ARE IN INCHES
- WHEN YOU DO THIS REPAIR, REFER TO:
  - AMM 51-21-0 FOR INTERIOR AND EXTERIOR FINISHES
  - AMM 28-11-0 FOR FUEL TANK SEALING
  - SRM 51-10-1 FOR INVESTIGATION AND CLEANUP OF DAMAGE
  - SRM 51-10-2 FOR PROTECTIVE TREATMENT OF METALS.
  - SRM 51-20-4 FOR REPAIR SEALING
  - SRM 51-30-0 FOR FASTENER CODE, REMOVAL, INSTALLATION, HOLE SIZES, EDGE MARGINS AND SUBSTITUTION

[A] CUT MIDWAY BETWEEN SKIN FASTENERS WITHIN ± 0.50 INCH OF THE POSITION SHOWN. TWO STIFFENER SPLICES WILL NORMALLY BE NECESSARY TO MAKE A REPAIR.

[B] THIS REPAIR ALSO APPLIES TO STIFFENERS MACHINED FROM BAC1506-1740 (WITH REINFORCEING STRAPS) OR BAC1518-551.

[C] 7075-0 HT-T6 MAY BE USED AS A SUBSTITUTE.

FASTENER SYMBOLS

+ INITIAL FASTENER LOCATION. INSTALL A 1/32 INCH OVERSIZE BACB30MY()K()Y OR BACB30FM()A()Y HEX-DRIVE BOLT WITH A BACC30R COLLAR

⊕ REPAIR FASTENER LOCATION. INSTALL A BACB30FM8A OR BACB30MY()K FASTENER.

Wing Center Section Upper Surface Z Stiffener Repair
Figure 8 (Sheet 1)

BOEING PROPRIETARY - Copyright © - Unpublished Work - See title page for details.

REPAIR MATERIAL			
PART		QTY	MATERIAL
1	ANGLE	1	0.040 INCH THICK 7178-0 HT-T6 C
2	ANGLE	1	0.040 INCH THICK 7178-0 HT-T6 C
3	ANGLE	1	0.040 INCH THICK 7178-0 HT-T6 C
4	ANGLE	1	0.040 INCH THICK 7178-0 HT-T6 C
5	ANGLE	1	0.071 INCH THICK 7178-0 HT-T6 C
6	ANGLE	1	0.071 INCH THICK 7178-0 HT-T6 C
7	STRAP	1	0.125 INCH THICK 7178-0 HT-T6 C
8	FILLER	1	MAKE FROM ORIGINAL EXTRUSION OR NEW STIFFENER

TABLE I

Wing Center Section Upper Surface Z Stiffener Repair
Figure 8 (Sheet 2)

BOEING PROPRIETARY - Copyright © - Unpublished Work - See title page for details.

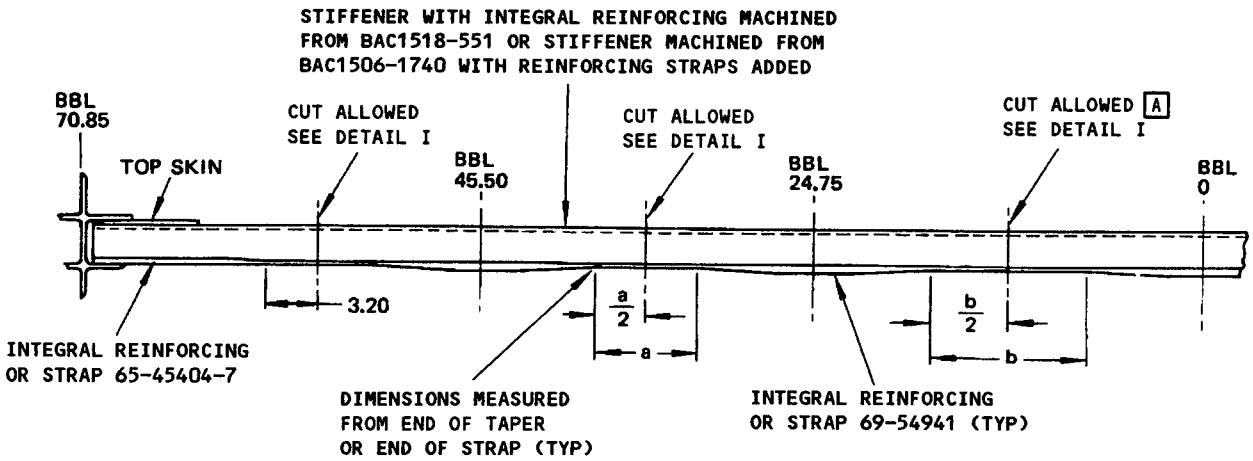

VIEW SHOWING PERMISSIBLE LOCATIONS OF STIFFENER SPLICE
DETAIL I

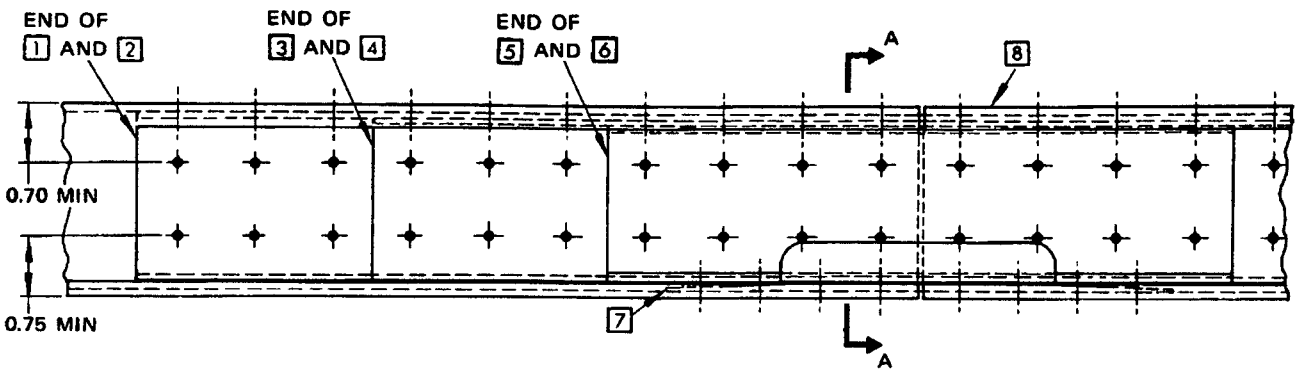

TYPICAL JOINT IN STIFFENER
DETAIL II

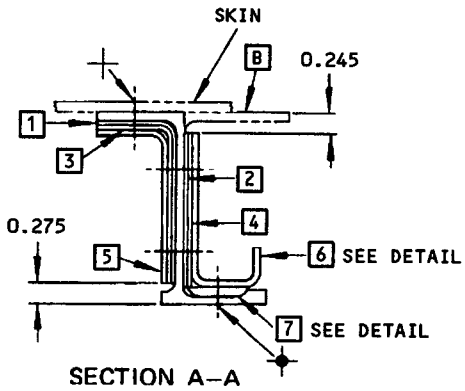

SECTION A–A

Wing Center Section Upper Surface Z Stiffener Repair
Figure 8 (Sheet 3)

BOEING PROPRIETARY - Copyright © - Unpublished Work - See title page for details.

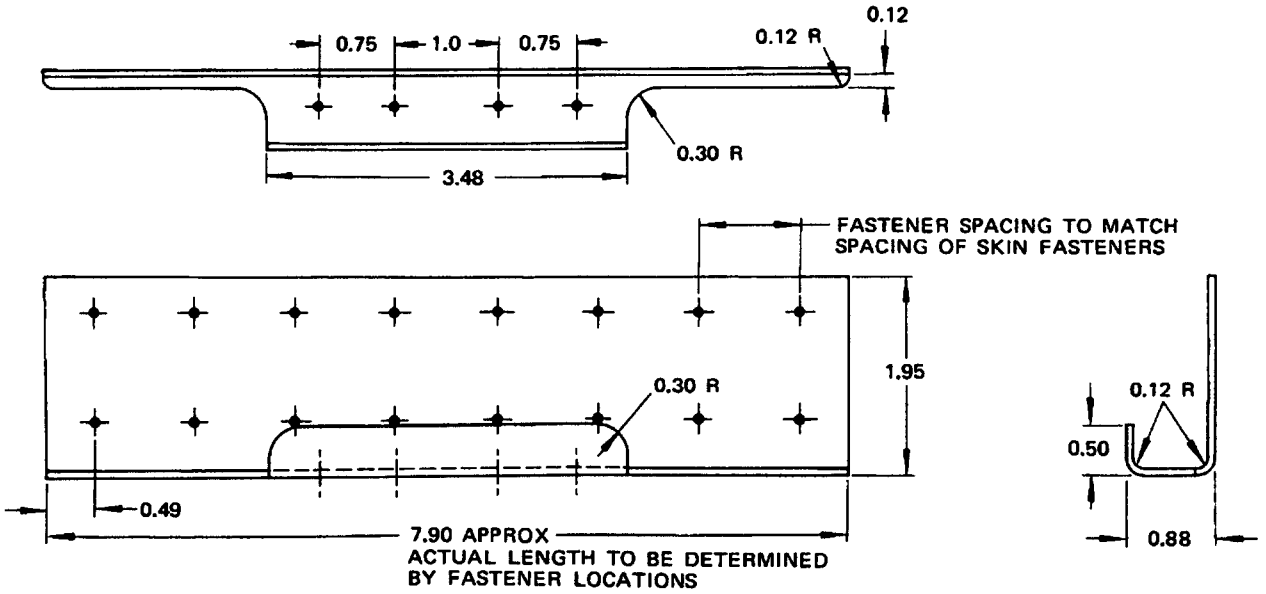

DETAIL OF PART 6

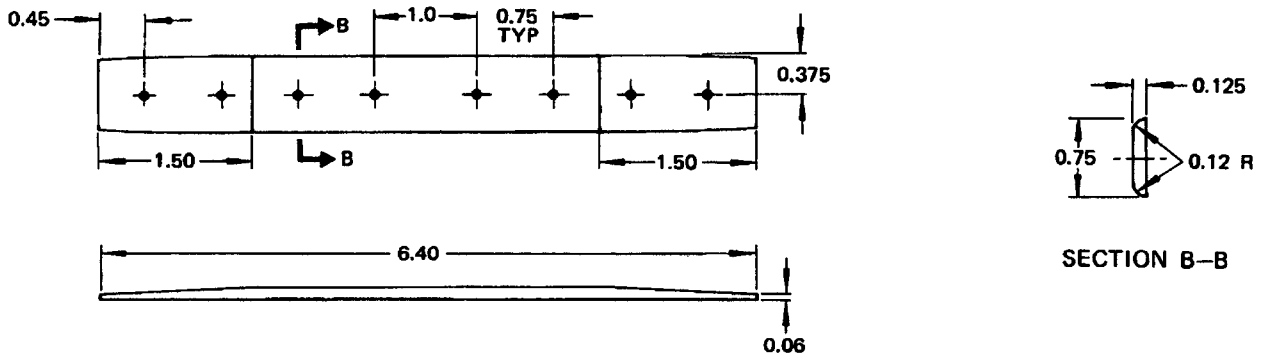

SECTION B–B

DETAIL OF PART 7

Wing Center Section Upper Surface Z Stiffener Repair
Figure 8 (Sheet 4)

BOEING PROPRIETARY - Copyright © - Unpublished Work - See title page for details.

APPLICABILITY

THIS REPAIR MAY BE USED FOR CRACKS THAT ARE NOT MORE THAN 3.0 INCHES LONG IN THE SKIN LEG FILLET RADIUS AT THE ATTACHMENT OF THE FLOOR BEAMS TO STIFFENERS S1C THRU S8C, S10C, S14C, S15C AND S17C TO S20C.

WHERE CRACKS ARE LONGER THAN 3.0 INCHES, REFER TO FIGURES 4 AND 8.

REPAIR INSTRUCTIONS

1. Drill 0.25 inch diameter stop holes just touching the ends of the crack. Use care not to damage the skin.
2. Do an eddy current inspection of the holes to make sure that the crack does not extend beyond them.
3. Make the repair parts given in Table I and shown in Detail I. [A]
4. Assemble the repair parts.
5. Drill and ream the fastener holes.
6. Remove the repair parts.
7. Remove all nicks, scratches, burrs, and sharp edges from the initial and repair parts.
8. Apply a chemical conversion coating to the repair parts and the bare surfaces of the initial parts.
9. Apply BMS 10-20 Type II primer to the repair parts and the bare surfaces of the initial parts.
10. Install the repair parts with BMS 5-26 Type II sealant between the faying surfaces. Refer to SRM 51-20-4.
11. Install the fasteners wet with BMS 5-26 Type II sealant.
12. Apply a fillet seal with BMS 5-26 Type II sealant along the edges of the repair parts. Refer to SRM 51-20-4.
13. Apply the finish. Refer to AMM 51-21.

NOTES

- THIS REPAIR COULD HAVE AN EFFECT ON A STRUCTURALLY SIGNIFICANT ITEM (SSI) GIVEN IN SRM 51-00-4, FIG. 3, BUT NO CHANGE TO THE SUPPLEMENTAL STRUCTURAL INSPECTION DOCUMENT (SSID) INSPECTION PROGRAM IS NECESSARY.
- WHEN YOU DO THIS REPAIR, REFER TO:
  - AMM 28-11-0 FOR FUEL TANK SEALING
  - AMM 51-21-0 FOR INTERIOR AND EXTERIOR FINISHES
  - NDT PART 6 51-00-00 FOR SURFACE INSPECTION OF ALUMINUM PARTS
  - SRM 51-10-1 FOR INVESTIGATION AND CLEANUP OF DAMAGE AND STOP DRILLING
  - SRM 51-10-2 FOR PROTECTIVE TREATMENT OF METALS
  - SRM 51-20-4 FOR REPAIR SEALING
  - SRM 51-30 FOR FASTENER CODE, REMOVAL, INSTALLATION, HOLE SIZES, EDGE MARGINS AND SUBSTITUTION

[A] MINIMUM BEND RADII
0.063 INCH THICK 7075-0 = 0.12 INCH
0.090 INCH THICK 7075-0 = 0.19 INCH

FASTENER SYMBOLS

+ INITIAL FASTENER LOCATION. INSTALL A 1/32 INCH OVERSIZE BACB30MY()K()Y OR BACB30KK()A()Y HEX-DRIVE BOLT WITH A BACC30R COLLAR.

REPAIR FASTENER LOCATION. INSTALL A BACB30FM6 FASTENER.

REPAIR MATERIAL			
PART		QTY	MATERIAL
[1]	ANGLE	1	0.063 INCH THICK 7075-0 HT-T6
[2]	ANGLE	1	0.090 INCH THICK 7075-0 HT-T6
[3]	RADIUS FILLER	1	0.200 INCH THICK 7075-T6 OR MAKE FROM BAC1512-485 7075-T6511

TABLE I

Wing Center Section Cracked Upper Surface Stiffener Repair
Figure 9 (Sheet 1)

BOEING PROPRIETARY - Copyright © - Unpublished Work - See title page for details.

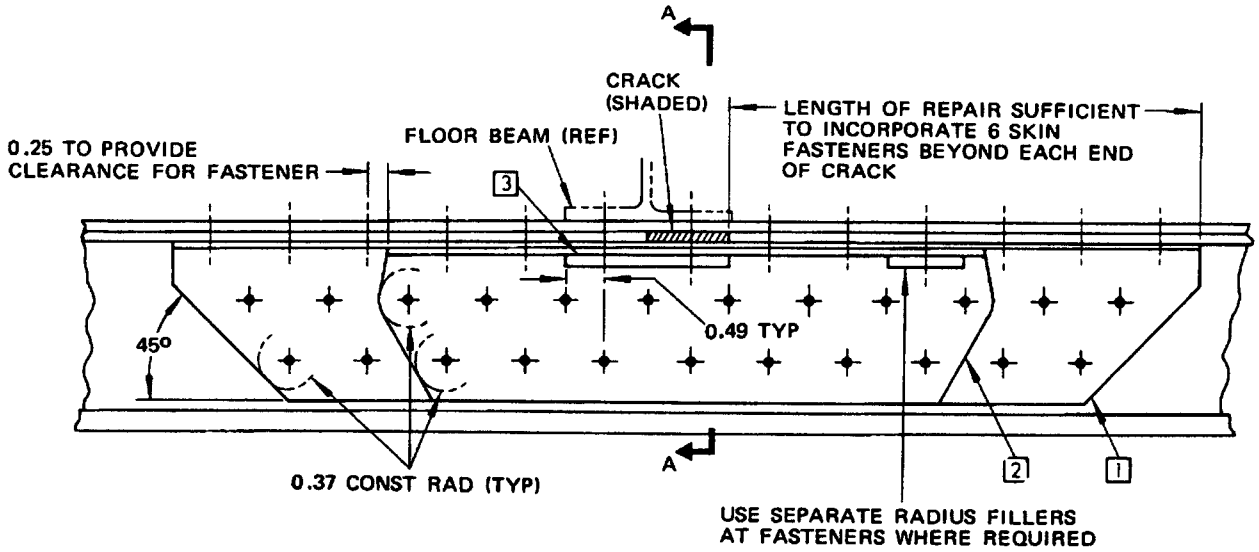

DETAIL I

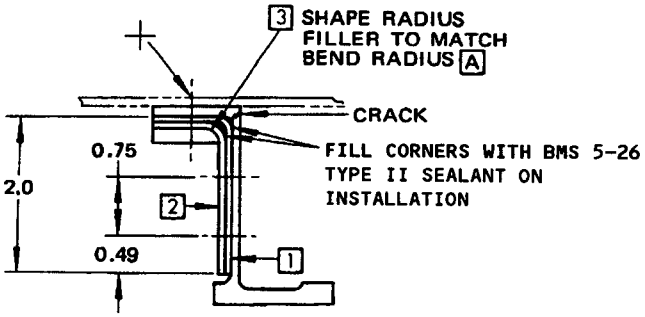

SECTION A–A

NOTE: ALL DIMENSIONS ARE IN INCHES

Wing Center Section Cracked Upper Surface Stiffener Repair
Figure 9 (Sheet 2)

BOEING PROPRIETARY - Copyright © - Unpublished Work - See title page for details.

SERVICE BULLETIN REPAIRS - WING SPARS

The following service bulletins contain spar repairs which are available for use where specific damage has been encountered. Usually, the service bulletin also covers preventive modification data which operators are encouraged to use to eliminate the need for repair.

DAMAGED AREA	CUM LINE NUMBER EFFECTIVITY	SB NUMBER
WING FRONT AND REAR SPAR CHORD	1 THRU 310, 323	737-57-1067
WING FRONT SPAR UPPER CHORD - INSPECTION/MODIFICATION - FRONT SPAR STATION 90 TO 225	1 THRU 310, 323	737-57A1081
WING CENTER SECTION REAR SPAR VERTICAL PRESSURE WEB MODIFICATION AND REPAIR	1 THRU 310 EXCLUDING CARGO AIRPLANES	737-57-1095

FOR AIRPLANES ON WHICH PREVENTIVE MODIFICATION HAS NOT BEEN ACCOMPLISHED

REPAIR INSTRUCTIONS

WARNING: MAKE SURE THAT THE FUEL IS REMOVED FROM THE TANKS AND THAT THE TANKS ARE SUPPLIED WITH A GOOD FLOW OF AIR. FUEL VAPORS MAY BE PRESENT WHICH ARE HAZARDOUS AND EXPLOSIVE.

1. Remove the fuel from the tanks. Make sure that the tanks are supplied with a good flow of air. Refer to 28-30-0 of the Maintenance Manual.

NOTE: Remove the wing tank access doors to get to the inside of the wing. Operate or remove the leading edge flaps and slats to get to the repair area on the forward side of the front spar.

2. Remove the tubes and the electrical wiring bundles from the spar if necessary.
3. Stop drill both ends of the crack to 0.250 dia min or cut out the damaged part of the web. Make sure the stop drill hole or the cut out hole removes all of the damaged material.
4. Refer to Detail I,II,III, or IV to find out which repair to use.
5. Make the repair parts. Refer to Table I, II,III, or IV.
6. Assemble the repair parts and drill the fastener holes.
7. Remove the repair parts.
8. Remove all of the nicks, scratches, gouges, and sharp edges from the repair parts and the web.
9. Make a radius of 0.015 to 0.030 inch on the sharp edges of the repair parts and the web.
10. Apply alodine to the repair parts and the bare surfaces of the web. Refer to 51-10-02.
11. Apply one layer of BMS 10-20, Type II primer to the repair parts and to the web. Refer to 51-21-0 of the Maintenance Manual.
12. Install the repair plates with BMS 5-26, Type II sealant between the faying surfaces. Pack the gap between the filler and the web with BMS 5-26, Type II sealant. Install the fasteners wet with BMS 5-26, Type II sealant.
13. Apply fillet seals around the plates and the fastener heads on the inner surface of the fuel tank. Use BMS 5-26, Type II sealant for the fillet seals.
14. Apply one layer of BMS 10-20, Type II primer to the sealant. Do not apply the primer until the sealant is tack free.
15. Paint the repair. Refer to 51-21-0 of the Maintenance Manual.

Wing Front Spar Web Repair
Figure 1 (Sheet 1)

NOTES

- THESE REPAIRS ARE NOT PERMITTED WHERE THE WEB IS SPLICED, WHERE THE FITTINGS ARE LOCATED, AT THE RIB JOINTS, OR ON THE PADDED UP AREAS OF THE WEB
- WHEN YOU USE THIS REPAIR REFER TO:

  51-10 FOR INVESTIGATION AND CLEANUP OF DAMAGE

  51-10-2 FOR PROTECTIVE TREATMENT OF METAL

  57-10-3 FOR FUEL TANK SEALING AND FOR INSTALLATION OF FASTENERS IN THE INTEGRAL FUEL TANKS

  51-30 FOR FASTENER CODE, REMOVAL, INSTALLATION, HOLE SIZES, AND EDGE MARGINS

  51-21-0 OF THE 737 MAINTENANCE MANUAL FOR INTERIOR AND EXTERIOR FINISHES

  28-11-0 OF THE 737 MAINTENANCE MANUAL FOR FUEL TANK SEALING
- d = REPAIR FASTENER DIAMETER

[A] USE THE SAME SPACING AS THE WEB TO SPAR CHORD FASTENERS

[B] TABS ARE REQUIRED WHEN A REPAIR PLATE ATTACHES TO THE UPPER OR LOWER CHORD. MAKE TABS SIMILAR TO THE TABS IN DETAIL II

[C] TO CALCULATE THE REPAIR PLATE THICKNESS, DIVIDE THE BASIC WEB THICKNESS AT THE REPAIR AREA BY TWO. USE THE NEXT HIGHER STANDARD SHEET THICKNESS FOR PLATE 1 AND FOR PLATE 2. REFER TO THE EXAMPLE GIVEN BELOW. IF THE BASIC WEB THICKNESS IS LESS THAN 0.080, USE THE NEXT HIGHER STANDARD SHEET GAGE FOR PLATE 1. PLATE 2 IS NOT REQUIRED.

EXAMPLE:
BASIC WEB THICKNESS = 0.090
0.090/2 = 0.045
THE NEXT HIGHER STANDARD GAGE IS 0.050
PLATE 1 = 0.050
PLATE 2 = 0.050

[D] A FILLER IS REQUIRED ONLY WHEN THE DAMAGE HAS BEEN CUT OUT AT A STIFFENER. MAKE THE FILLER TO FIT THE SHAPE OF THE HOLE IN THE WEB. USE A FILLER THE SAME THICKNESS AS THE WEB

[E] FOR CUM LINE NUMBERS:
1 THRU 30

[F] FOR CUM LINE NUMBERS:
31 THRU 71,73 THRU 83,85 THRU 101,103 THRU 109,111 THRU 127,129 THRU 142,144 THRU 148,150 THRU 154,156,159 THRU 161,163,165, 167 THRU 172,174 THRU 183,185 THRU 193, 195,197,198,200 THRU 202,204,206,207,209 THRU 211,213,214,216,218 THRU 222,224,226 THRU 229,231 THRU 233,235 THRU 237,239 THRU 241,243,244,246 THRU 248,250,252,253, 257 THRU 262,264,266,267,269 THRU 273,275, 277,279,280,282 THRU 285,287,291 THRU 293, 296,323 THRU 325,327,331,374,375,380,383

[G] FOR CUM LINE NUMBERS:
72,84,102,110,128,143,149,155,157,158,162, 164,166,173,184,194,196,199,203,205,208, 212,215,217,223,225,230,234,238,242,245, 249,251,254 THRU 256,263,265,268,274,276, 278,281,286,288 THRU 290,294,295,297 THRU 316,318 THRU 322,328,332,333,335,338,341, 342,344,346,348,351 THRU 354,356,358,360, 361,364 THRU 373,376 THRU 379,381,382,384 THRU 559,561 THRU 571,573 THRU 577,579, 580,582,583,585 THRU 589,591 THRU 594,596, 598,599,601,602,604,606,607,609,611,613, 615,617,619,622,624,626 THRU 628,630,632 THRU 645,648,649,651,653,654,656 THRU 665, 667,669 THRU 671,673 THRU 687,689,691 THRU 695,697,699,701,703,704,706 THRU 708,710 THRU 743,745,747,THRU 752,754,757,759,762, 764,766,769,772,777,779 THRU 781,783,787, 788,790,791,793 THRU 799,802,805,807,809, 811,821,828 THRU 830,834 THRU 836,838,840, 842 THRU 844,846,847,851,853,854,859,860, 866,869,880,881,884,887,890,891,893 THRU 896,899,902,903,907,920,925,930,936,937, 939,941,943,944,948,950,952,958,959,971, 977,980,982,1010,1033,1083,1084,1114 THRU 1119

Wing Front Spar Web Repair
Figure 1 (Sheet 2)

NOTES (CONT)

H FOR CUM LINE NUMBERS:
560,572,578,581,584,590,595,597,600,603,
605,608,610,612,614,616,618,620,621,623,
625,629,631,646,647,650,652,655,666,668,
672,688,690,696,698,700,702,705,709,744,
746,753,755,756,758,760,761,763,765,767,
768,770,771,773 THRU 776,778,782,784 THRU
786,789,792,800,801,803,804,806,808,810,
812 THRU 820,822 THRU 827,831 THRU 833,837,
839,841,845,848 THRU 850,852,855 THRU 858,
861 THRU 865,867,868,870 THRU 879,882,883,
885,886,888,889,892,897,898,900,901,904
THRU 906,908 THRU 919,921 THRU 924,926 THRU
929,931 THRU 935,938,940,942,945 THRU 947,
949,951,953 THRU 957,960 THRU 970,972 THRU
976,978,979,981,983 THRU 1009,1011 THRU
1032,1034 THRU 1082,1085 THRU 1113,1120
THRU 1203,1223 AND ON

SYMBOLS

REFERENCE FASTENER LOCATION

REPAIR FASTENER LOCATION. INSTALL A BACB30FM HI-LOK AND A BACC30M COLLAR OF THE SAME DIAMETER AS THE WEB TO SPAR CHORD FASTENERS

EXISTING FASTENER LOCATION. INSTALL A 1/32 OVERSIZE BACB30KK HI-LOK AND A BACC30R COLLAR. AS AN ALTERNATIVE, INSTALL A 1/64 OVERSIZE BACB30FP HI-LOK AND A BACC30M COLLAR

Wing Front Spar Web Repair
Figure 1 (Sheet 3)

LOCATION		FRONT SPAR WEB MATERIAL	REPAIR MATERIAL					
FSS		BASIC WEB THICKNESS	PART		QTY	MATERIAL	THICKNESS	
FROM	TO						PLATE 1	PLATE 2
86.52	119.75	0.102	1 2	PLATE PLATE	AS REQUIRED	2024-T3	0.063	0.063
119.75	129.67	TAPERS FROM 0.102 TO 0.115					C	
129.67	144.36	0.115					0.063	0.063
144.36	154.00	TAPERS FROM 0.115 TO 0.106					C	
154.00	200.00	0.106					0.063	0.063
200.00	222.00	TAPERS FROM 0.106 TO 0.250					C	
222.00	248.00	0.250					0.160	0.160
248.00	268.00	TAPERS FROM 0.250 TO 0.120					C	
268.00	463.00	TAPERS FROM 0.120 TO 0.112					C	
463.00	545.00	TAPERS FROM 0.112 TO 0.088					C	
545.00	635.71	0.088					0.050	0.050
			3	FILLER	1	2024-T3	D	

TABLE I E

LOCATION		FRONT SPAR WEB MATERIAL	REPAIR MATERIAL					
FSS		BASIC WEB THICKNESS	PART		QTY	MATERIAL	THICKNESS	
FROM	TO						PLATE 1	PLATE 2
86.52	119.75	0.102	1 2	PLATE PLATE	AS REQUIRED	2024-T3	0.063	0.063
119.75	129.67	TAPERS FROM 0.102 TO 0.115					C	
129.67	144.36	0.115					0.063	0.063
144.36	154.00	TAPERS FROM 0.115 TO 0.106					C	
154.00	200.00	0.106					0.063	0.063
200.00	222.00	TAPERS FROM 0.106 TO 0.250					C	
222.00	248.00	0.250					0.160	0.160
248.00	268.00	TAPERS FROM 0.250 TO 0.120					C	
268.00	410.00	TAPERS FROM 0.120 TO 0.115					C	
410.00	500.00	TAPERS FROM 0.115 TO 0.090					C	
500.00	635.71	TAPERS FROM 0.090 TO 0.040					C	
			3	FILLER	1	2024-T3	D	

TABLE II F

Wing Front Spar Web Repair
Figure 1 (Sheet 4)

LOCATION		FRONT SPAR WEB MATERIAL	REPAIR MATERIAL					
FSS		BASIC WEB THICKNESS	PART		QTY	MATERIAL	THICKNESS	
FROM	TO						PLATE 1	PLATE 2
86.52	120.00	0.120	1 2	PLATE PLATE	AS REQUIRED	2024-T3	0.063	0.063
120.00	135.50	TAPERS FROM 0.120 TO 0.140					C	
135.50	205.00	0.140					0.071	0.071
205.00	220.00	TAPERS FROM 0.140 TO 0.250					C	
220.00	255.00	0.250					0.160	0.160
255.00	273.40	TAPERS FROM 0.250 TO 0.140					C	
273.40	300.00	0.140					0.071	0.071
300.00	345.00	TAPERS FROM 0.140 TO 0.121					C	
345.00	410.00	TAPERS FROM 0.121 TO 0.115					C	
410.00	500.00	TAPERS FROM 0.115 TO 0.090					C	
500.00	635.71	TAPERS FROM 0.090 TO 0.040					C	
			3	FILLER	1	2024-T3	D	

TABLE III G

LOCATION		FRONT SPAR WEB MATERIAL	REPAIR MATERIAL					
FSS		BASIC WEB THICKNESS	PART		QTY	MATERIAL	THICKNESS	
FROM	TO						PLATE 1	PLATE 2
86.52	120.00	0.120	1 2	PLATE PLATE	AS REQUIRED	2024-T3	0.063	0.063
120.00	135.50	TAPERS FROM 0.120 TO 0.140					C	
135.50	205.00	0.140					0.071	0.071
205.00	220.00	TAPERS FROM 0.140 TO 0.250					C	
220.00	255.00	0.250					0.160	0.160
255.00	273.40	TAPERS FROM 0.250 TO 0.145					C	
273.40	300.00	TAPERS FROM 0.145 TO 0.0141					C	
300.00	345.00	TAPERS FROM 0.141 TO 0.134					C	
345.00	410.00	TAPERS FROM 0.134 TO 0.120					C	
410.00	500.00	TAPERS FROM 0.120 TO 0.090					C	
500.00	635.71	TAPERS FROM 0.090 TO 0.040					C	
			3	FILLER	1	2024-T3	D	

TABLE IV H

Wing Front Spar Web Repair
Figure 1 (Sheet 5)

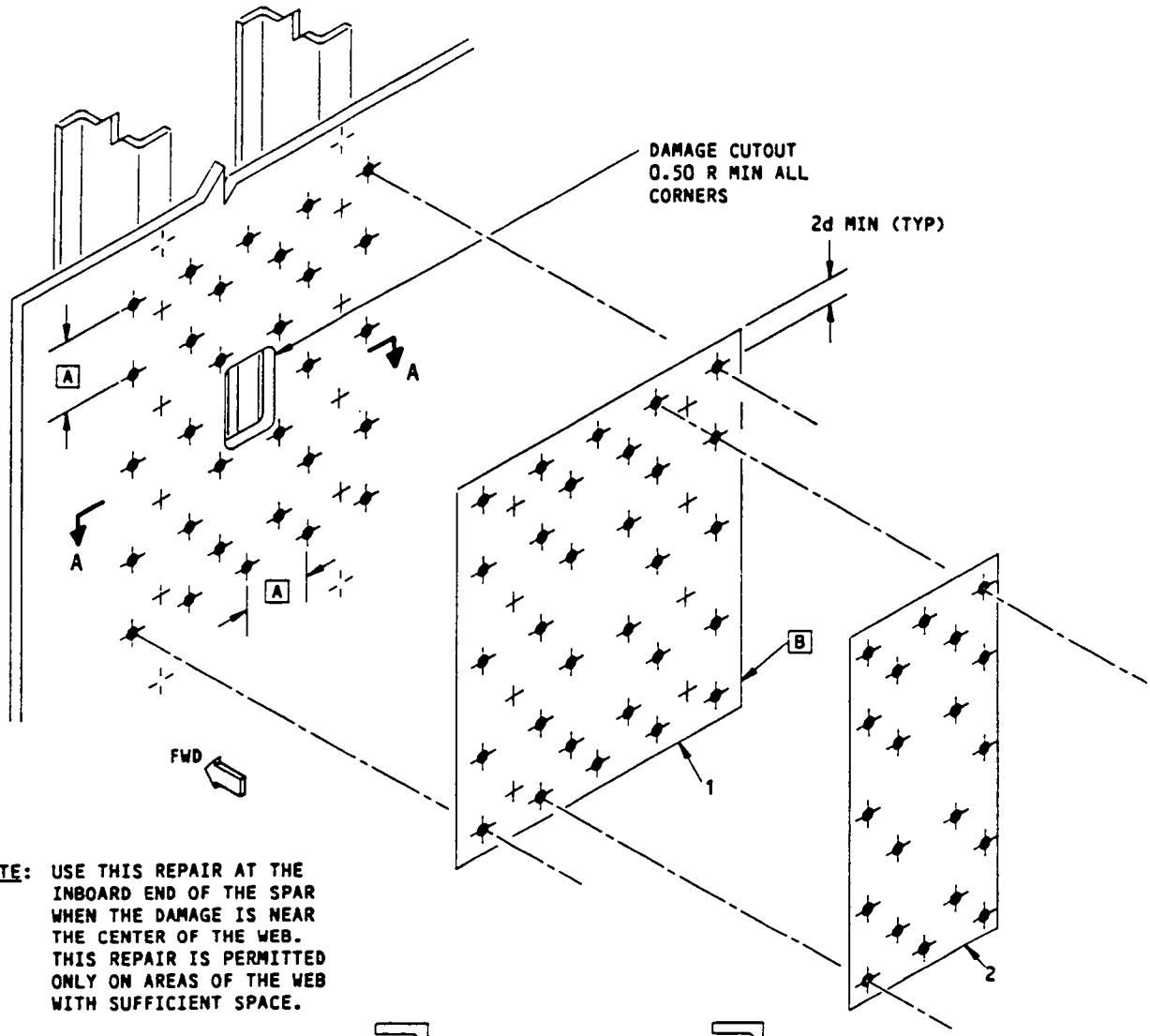

NOTE: USE THIS REPAIR AT THE INBOARD END OF THE SPAR WHEN THE DAMAGE IS NEAR THE CENTER OF THE WEB. THIS REPAIR IS PERMITTED ONLY ON AREAS OF THE WEB WITH SUFFICIENT SPACE.

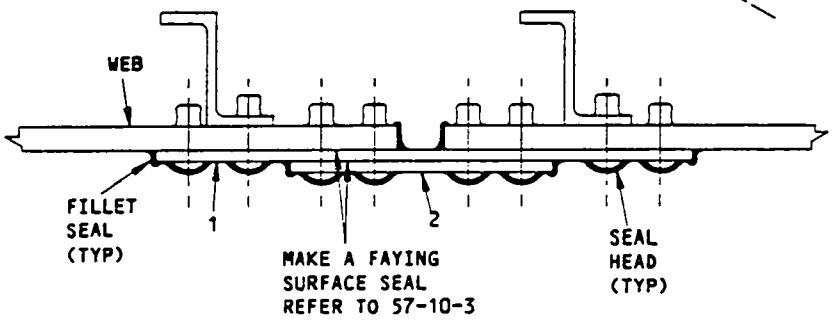

SECTION A-A

DAMAGE BETWEEN STIFFENERS
DETAIL I

Wing Front Spar Web Repair
Figure 1 (Sheet 6)

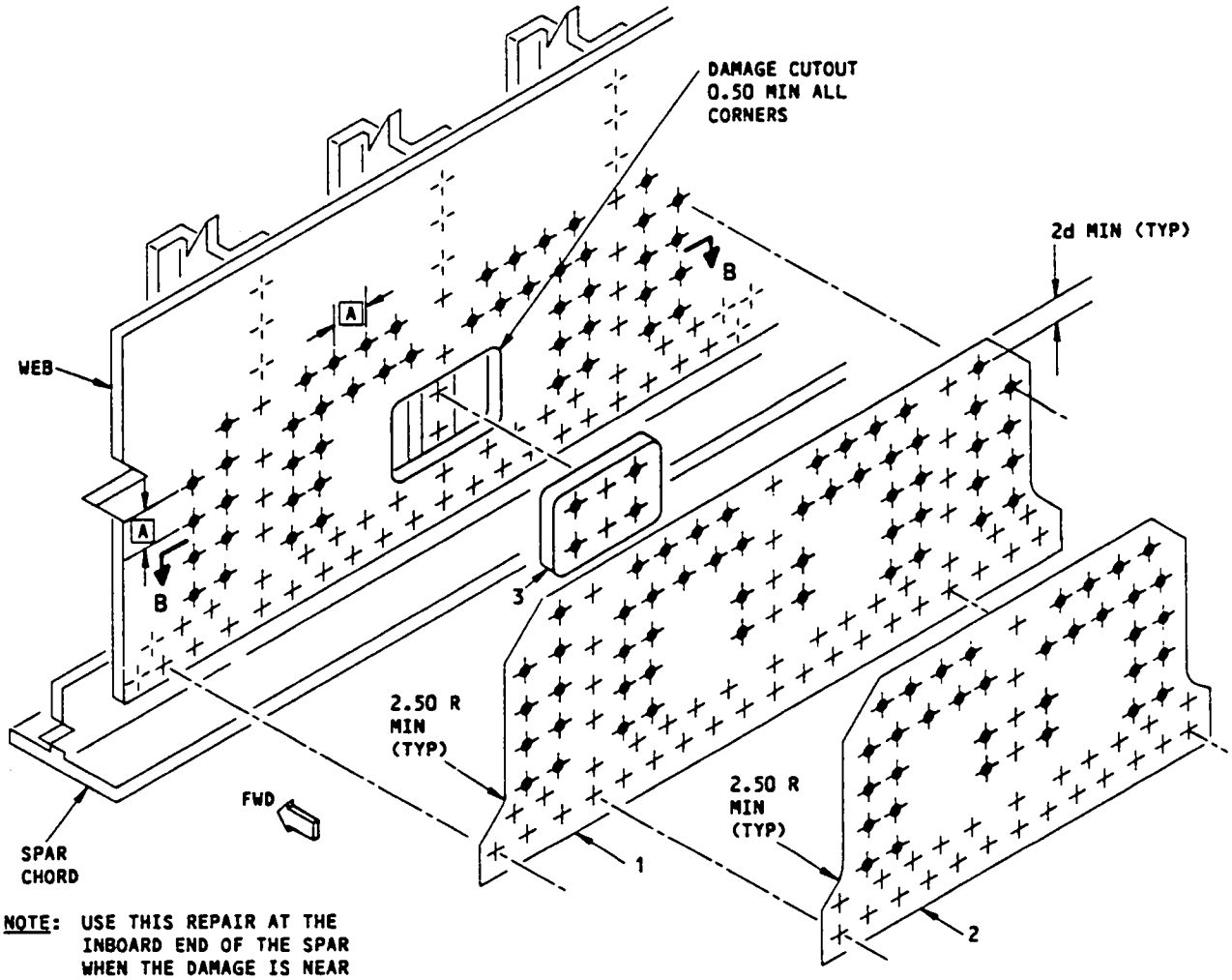

NOTE: USE THIS REPAIR AT THE INBOARD END OF THE SPAR WHEN THE DAMAGE IS NEAR THE UPPER OR LOWER CHORD.

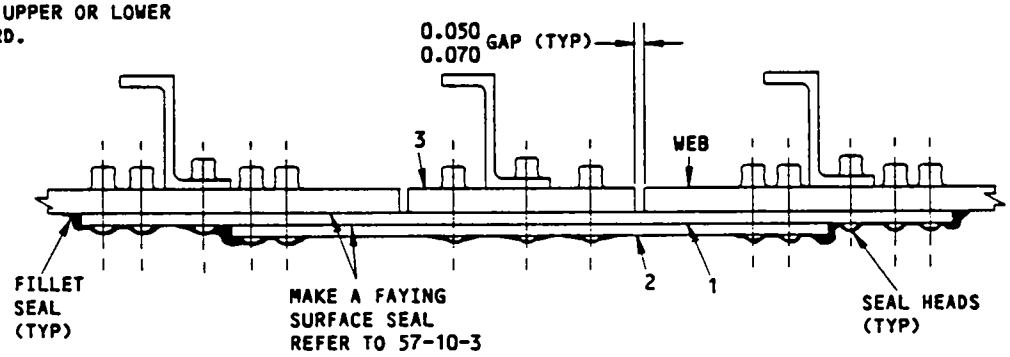

SECTION B-B

DAMAGE AT A STIFFENER
DETAIL II

Wing Front Spar Web Repair
Figure 1 (Sheet 7)

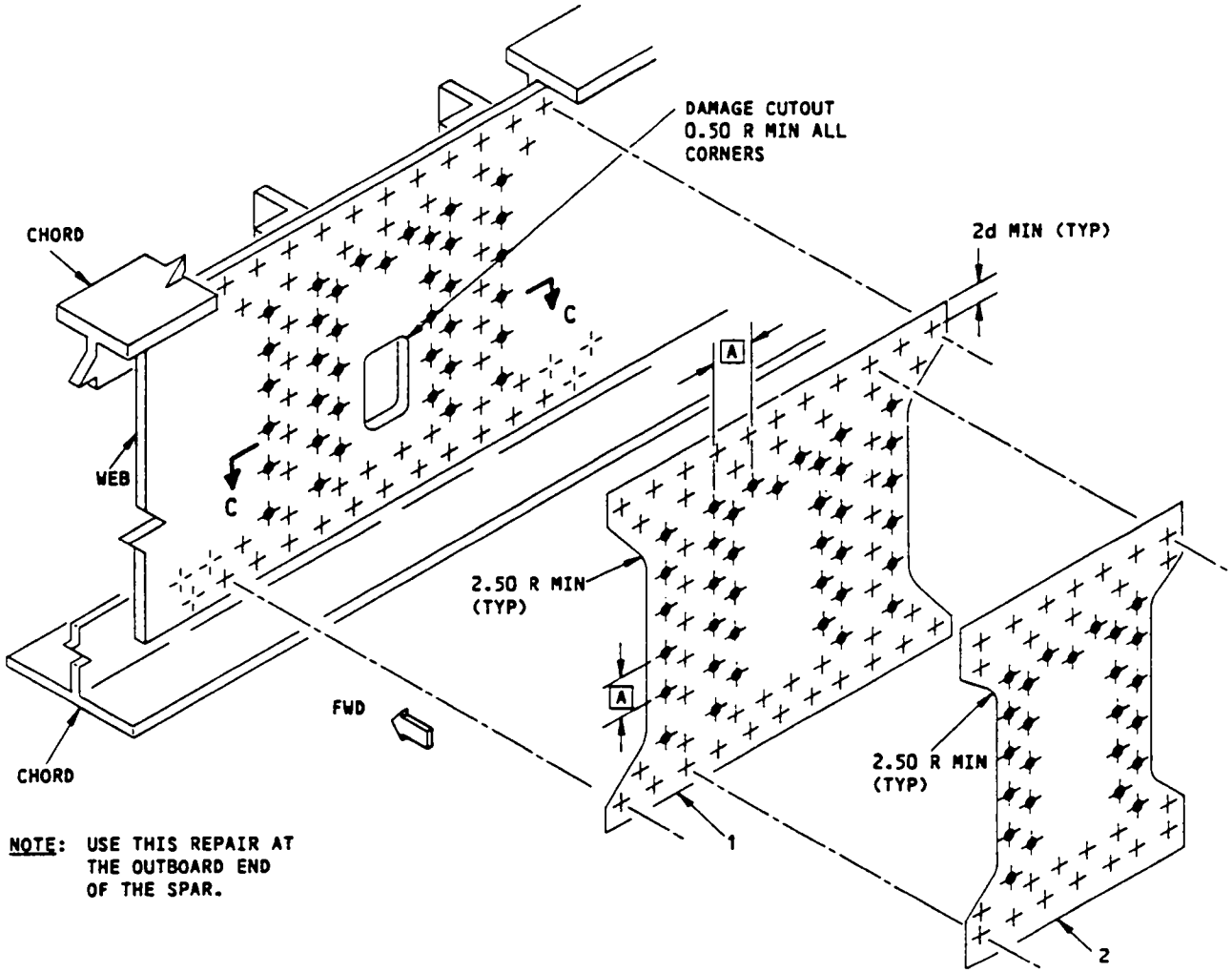

NOTE: USE THIS REPAIR AT THE OUTBOARD END OF THE SPAR.

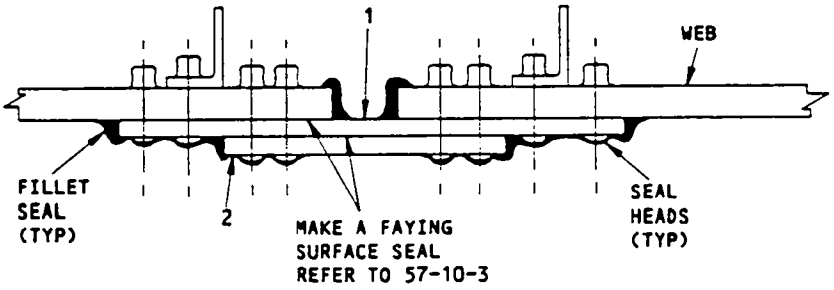

SECTION C-C

DAMAGE BETWEEN STIFFENERS
DETAIL III

Wing Front Spar Web Repair
Figure 1 (Sheet 8)

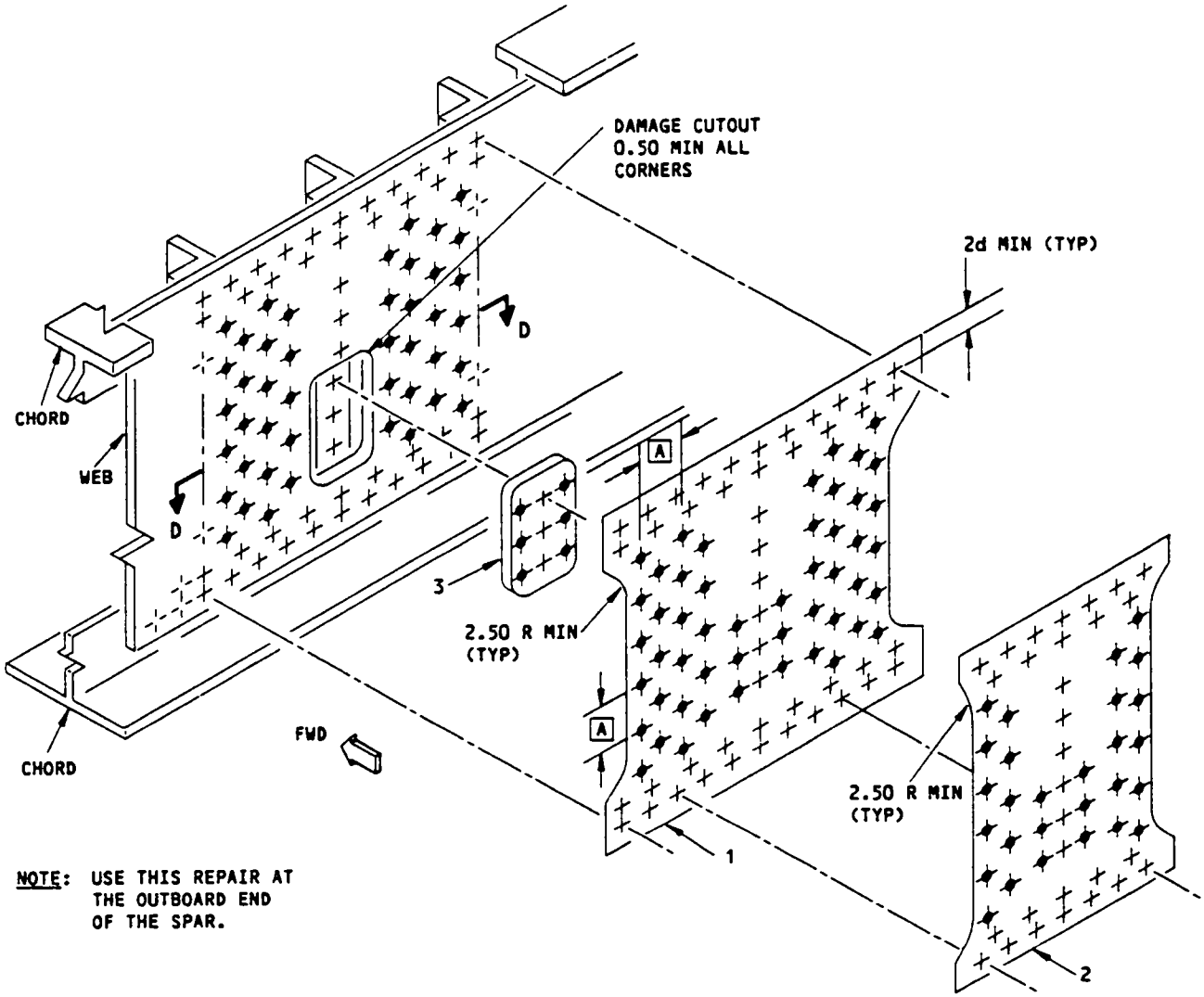

NOTE: USE THIS REPAIR AT THE OUTBOARD END OF THE SPAR.

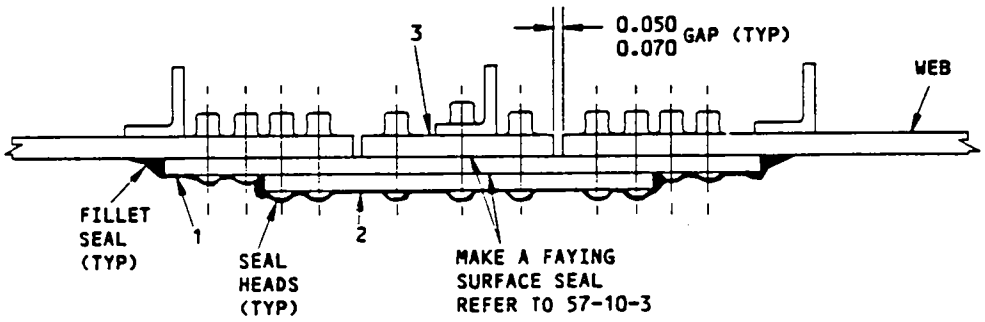

SECTION D-D

DAMAGE AT A STIFFENER
DETAIL IV

Wing Front Spar Web Repair
Figure 1 (Sheet 9)

REPAIR INSTRUCTIONS

WARNING: MAKE SURE THAT THE FUEL IS REMOVED FROM THE TANKS AND THAT THE TANKS ARE SUPPLIED WITH A GOOD FLOW OF AIR. FUEL VAPORS MAY BE PRESENT WHICH ARE HAZARDOUS AND EXPLOSIVE.

1. Remove the fuel from the tanks. Make sure that the tanks are supplied with a good flow of air. Refer to 28-30-0 of the Maintenance Manual.

NOTE: Remove the wing tank access doors to get to the inside of the wing. Operate or remove the trailing edge flaps and the ailerons to get to the repair area on the aft side of the rear spar.

2. Remove the tubes and the electrical wiring bundles from the spar if necessary.
3. Stop drill both ends of the crack to 0.250 dia min or cut out the damaged part of the web. Make sure the stop drill hole or the cut out hole removes all of the damaged material.
4. Refer to Detail I,II,III, or IV to find out which repair to use.
5. Make the repair parts. Refer to Table I, II,III, or IV.
6. Assemble the repair parts and drill the fastener holes.
7. Remove the repair parts.
8. Remove all of the nicks, scratches, gouges and sharp edges from the repair parts and the web.
9. Make a radius of 0.015 to 0.030 inch on the sharp edges of the repair parts and the web.
10. Apply alodine to the repair parts and the bare surfaces of the web. Refer to 51-10-2.
11. Apply one layer of BMS 10-20, Type II primer to the repair parts and to the web. Refer to 51-21-0 of the Maintenance Manual.
12. Install the repair plates with BMS 5-26, Type II sealant between the faying surfaces. Pack the gap between the filler and the web with BMS 5-26, Type II sealant. Install the fasteners wet with BMS 5-26, Type II sealant.
13. Apply fillet seals around the plates and the fastener heads on the inner surface of the fuel tank. Use BMS 5-26, Type II sealant for the fillet seals.
14. Apply one layer of BMS 10-20, Type II primer to the sealant. Do not apply the primer until the sealant is tack free.
15. Paint the repair. Refer to 51-21-0 of the Maintenance Manual.

Wing Rear Spar Web Repair
Figure 2 (Sheet 1)

NOTES

- THESE REPAIRS ARE NOT PERMITTED WHERE THE WEB IS SPLICED, WHERE THE FITTINGS ARE LOCATED, AT THE RIB JOINTS, ON THE PADDED UP AREAS OF THE WEB, OR INBOARD OF RSS 179.56
- WHEN YOU USE THIS REPAIR REFER TO:

  51-10 FOR INVESTIGATION OF CLEANUP OF DAMAGE

  51-10-2 FOR PROTECTIVE TREATMENT OF METAL

  51-30 FOR FASTENER CODE, REMOVAL, INSTALLATION, HOLE SIZES, AND EDGE MARGINS

  57-10-3 FOR FUEL TANK SEALING AND FOR INSTALLATION OF FASTENERS IN THE INTEGRAL FUEL TANKS

  28-11-0 OF THE 737 MAINTENANCE MANUAL FOR FUEL TANK SEALING

  51-21-0 OF THE 737 MAINTENANCE MANUAL FOR INTERIOR AND EXTERIOR FINISHES
- d = REPAIR FASTENER DIAMETER

[A] USE THE SAME SPACING AS THE WEB TO SPAR CHORD FASTENERS

[B] CONTACT THE BOEING COMPANY FOR WEB REPAIRS IN THESE AREAS

[C] TABS ARE REQUIRED WHEN A REPAIR PLATE ATTACHES TO THE UPPER OR LOWER CHORD. MAKE TABS SIMILAR TO THE TABS IN DETAIL II

[D] TO CALCULATE THE REPAIR PLATE THICKNESS, DIVIDE THE BASIC WEB THICKNESS AT THE REPAIR AREA BY TWO. USE THE NEXT HIGHER STANDARD SHEET THICKNESS FOR PLATE 1 AND FOR PLATE 2. REFER TO THE EXAMPLE GIVEN BELOW. IF THE BASIC WEB THICKNESS IS LESS THAN 0.080 USE THE NEXT HIGHER STANDARD SHEET GAGE FOR PLATE 1. PLATE 2 IS NOT REQUIRED.

EXAMPLE:

BASIC WEB THICKNESS = 0.090
0.090/2 = 0.045
THE NEXT HIGHER STANDARD GAGE IS 0.050
PLATE 1 = 0.050
PLATE 2 = 0.050

[E] A FILLER IS REQUIRED ONLY WHEN THE DAMAGE HAS BEEN CUT OUT AT A STIFFENER. MAKE THE FILLER TO FIT THE SHAPE OF THE HOLE IN THE WEB. USE A FILLER THE SAME THICKNESS AS THE WEB

[F] FOR CUM LINE NUMBERS:
1 THRU 30

[G] FOR CUM LINE NUMBERS:
31 THRU 71,73 THRU 83,85 THRU 91

[H] FOR CUM LINE NUMBERS:
92 THRU 101,103 THRU 109, 111 THRU 127,129 THRU 142,144 THRU 148,150 THRU 154,156,159 THRU 161,163,165,167 THRU 172,174 THRU 183, 185 THRU 193,195,197,198,200 THRU 202,204, 206,207,209 THRU 211,213,214,216,218 THRU 222, 224,226 THRU 229,231 THRU 233,235 THRU 237,239 THRU 241,243,244,246 THRU 248,250, 252,253,257 THRU 262,264,266,267,269 THRU 273,275,277,279,280,282 THRU 285,287,291 THRU 293,296,323 THRU 325,327,331,374,375, 380,383

[I] FOR CUM LINE NUMBERS:
72,84,102,110,128,143,149,155,157,158,162, 164,166,173,184,194,196,199,203,205,208, 212,215,217,223,225,230,234,238,242,245, 249,251,254 THRU 256,263,265,268,274,276, 278,281,286,288 THRU 290,294,295,297 THRU 316,318 THRU 322,328,332,333,335,338,341, 342,344,346,348,351 THRU 354,356,358,360, 361,364 THRU 373,376 THRU 379,381,382,384 THRU 1000,1002 THRU 1005,1006,1008 THRU 1014,1016 THRU 1021,1023 THRU 1029,1031 THRU 1036,1038 THRU 1041,1044 THRU 1047, 1049 THRU 1051,1053 THRU 1056,1058 THRU 1062,1064 THRU 1068,1070 THRU 1072,1074, 1075,1077 THRU 1079,1081,1082,1084 THRU 1086,1088,1089,1091,1093,1095,1097,1099, 1102,1105,1109,1113,1117,1120,1135,1143, 1151,1154,1155,1165,1167,1176,1178,1186, 1189,1194,1197,1199,1203,1223,1226,1236, 1241,1245,1256,1257,1261,1262,1265 THRU 1267,1299,1313,1319,1329,1342,1347,1361, 1369,1371,1379,1387,1392,1397,1399,1401, 1403,1405,1414,1415,1418,1420,1422,1424, 1426,1453,1456,1486,1523,1530,1565,1579, 1581,1583,1585

Wing Rear Spar Web Repair
Figure 2 (Sheet 2)

SYMBOLS

-¦- REFERENCE FASTENER LOCATION

-✦- REPAIR FASTENER LOCATION. INSTALL A BACB30FM HI-LOK AND A BACC30M COLLAR OF THE SAME DIAMETER AS THE WEB TO SPAR CHORD FASTENERS

-+- EXISTING FASTENER LOCATION. INSTALL A 1/32 OVERSIZE BACB30KK HI-LOK AND A BACC30R COLLAR. AS AN ALTERNATIVE, INSTALL A 1/64 OVERSIZE BACB30FP HI-LOK AND A BACC30M COLLAR

Wing Rear Spar Web Repair
Figure 2 (Sheet 3)

LOCATION		REAR SPAR WEB MATERIAL	REPAIR MATERIAL					
RSS		BASIC WEB THICKNESS	PART		QTY	MATERIAL	THICKNESS	
FROM	TO						PLATE 1	PLATE 2
134.74	168.74	0.250	B					
168.74	179.56	0.235	B					
179.56	224.14	0.235	1	PLATE	AS REQUIRED	2024-T3	0.125	0.125
224.14	259.38	0.200	2	PLATE			0.112	0.112
259.38	300.00	TAPERS FROM 0.200 TO 0.115					D	
300.00	453.50	0.115					0.063	0.063
453.50	537.50	TAPERS FROM 0.115 TO 0.085					D	
537.50	637.26	0.085					0.050	0.050
			3	FILLER	1	2024-T3	E	

TABLE I F

LOCATION		REAR SPAR WEB MATERIAL	REPAIR MATERIAL					
RSS		BASIC WEB THICKNESS	PART		QTY	MATERIAL	THICKNESS	
FROM	TO						PLATE 1	PLATE 2
134.74	168.74	0.250	B					
168.74	179.56	0.235	B					
179.56	224.14	0.235	1	PLATE	AS REQUIRED	2024-T3	0.125	0.125
224.14	259.38	0.200	2	PLATE			0.112	0.112
259.38	300.00	TAPERS FROM 0.200 TO 0.115					D	
300.00	453.50	0.115					0.063	0.063
453.50	458.00	TAPERS FROM 0.115 TO 0.072					D	
458.00	637.26	TAPERS FROM 0.072 TO 0.040					D	
			3	FILLER	1	2024-T3	E	

TABLE II G

Wing Rear Spar Web Repair
Figure 2 (Sheet 4)

LOCATION		REAR SPAR WEB MATERIAL	REPAIR MATERIAL					
RSS		BASIC WEB THICKNESS	PART		QTY	MATERIAL	THICKNESS	
FROM	TO						PLATE 1	PLATE 2
134.74	168.74	0.250	[B]					
168.74	179.56	0.235	[B]					
179.56	224.14	0.235	1	PLATE	AS REQUIRED	2024-T3	0.125	0.125
224.14	259.38	0.200	2	PLATE			0.112	0.112
259.38	279.40	TAPERS FROM 0.200 TO 0.180					[D]	
279.40	328.10	0.180					0.100	0.100
328.10	435.50	TAPERS FROM 0.180 TO 0.115					[D]	
435.50	458.00	TAPERS FROM 0.115 TO 0.072					[D]	
458.00	637.26	TAPERS FROM 0.072 TO 0.040					[D]	
			3	FILLER	1	2024-T3	[E]	

TABLE III [H]

LOCATION		REAR SPAR WEB MATERIAL	REPAIR MATERIAL					
RSS		BASIC WEB THICKNESS	PART		QTY	MATERIAL	THICKNESS	
FROM	TO						PLATE 1	PLATE 2
134.74	168.74	0.275	[B]					
168.74	179.56	0.310	[B]					
179.56	224.14	0.310	1	PLATE	AS REQUIRED	2024-T3	0.160	0.160
224.14	259.38	0.200	2	PLATE			0.112	0.112
259.38	279.40	TAPERS FROM 0.200 TO 0.186					[D]	
279.40	328.10	TAPERS FROM 0.186 TO 0.174					[D]	
328.10	350.10	TAPERS FROM 0.174 TO 0.115					[D]	
350.10	435.50	0.115					0.063	0.063
435.50	458.00	TAPERS FROM 0.115 TO 0.072					[D]	
458.00	637.26	TAPERS FROM 0.072 TO 0.040					[D]	
			3	FILLER	1	2024-T3	[E]	

TABLE IV [I]

Wing Rear Spar Web Repair
Figure 2 (Sheet 5)

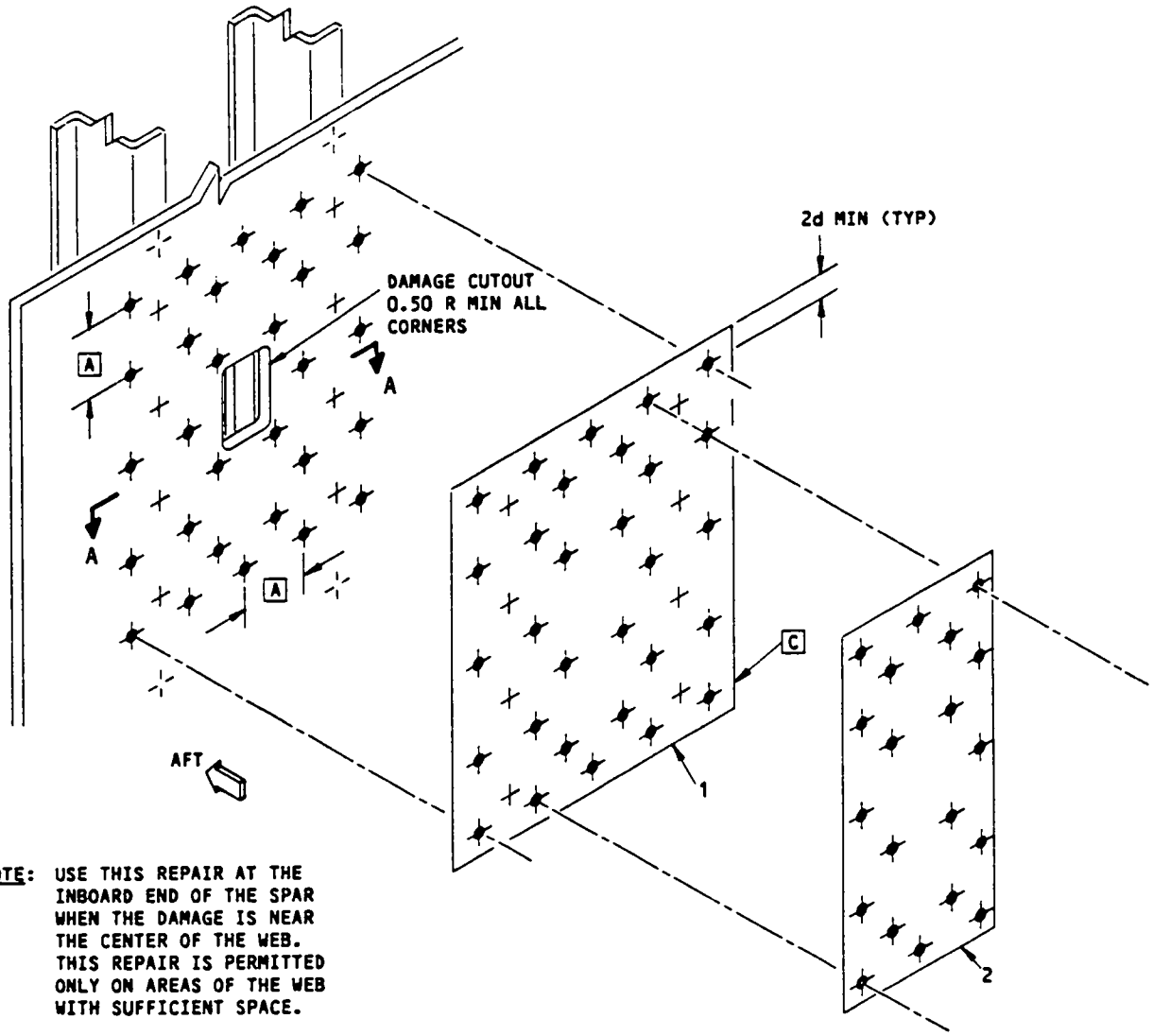

NOTE: USE THIS REPAIR AT THE INBOARD END OF THE SPAR WHEN THE DAMAGE IS NEAR THE CENTER OF THE WEB. THIS REPAIR IS PERMITTED ONLY ON AREAS OF THE WEB WITH SUFFICIENT SPACE.

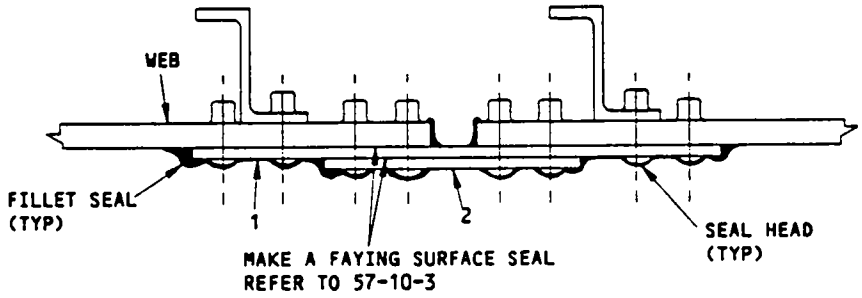

SECTION A-A

DAMAGE BETWEEN STIFFENERS
DETAIL I

Wing Rear Spar Web Repair
Figure 2 (Sheet 6)

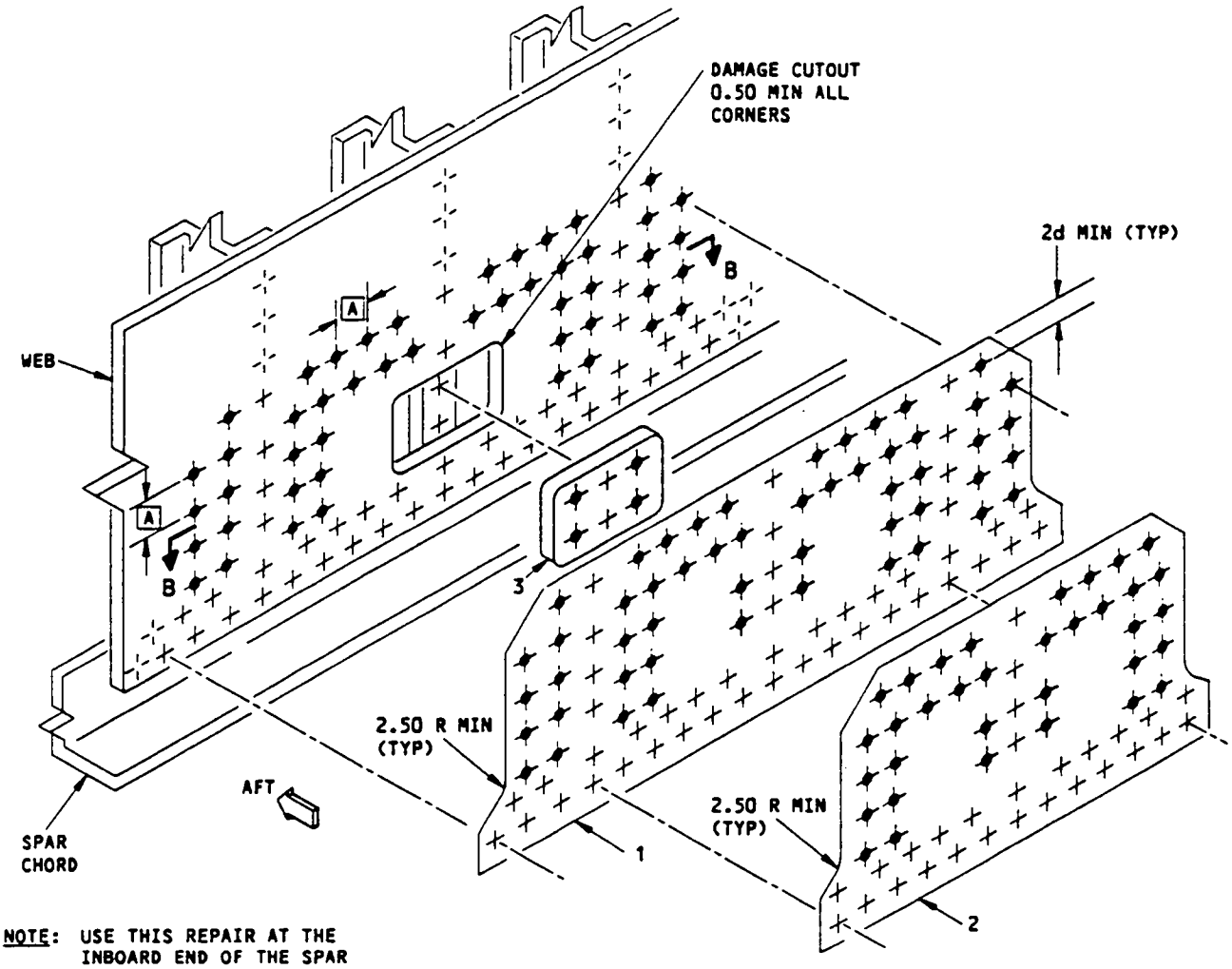

NOTE: USE THIS REPAIR AT THE INBOARD END OF THE SPAR WHEN THE DAMAGE IS NEAR THE UPPER OR LOWER CHORD.

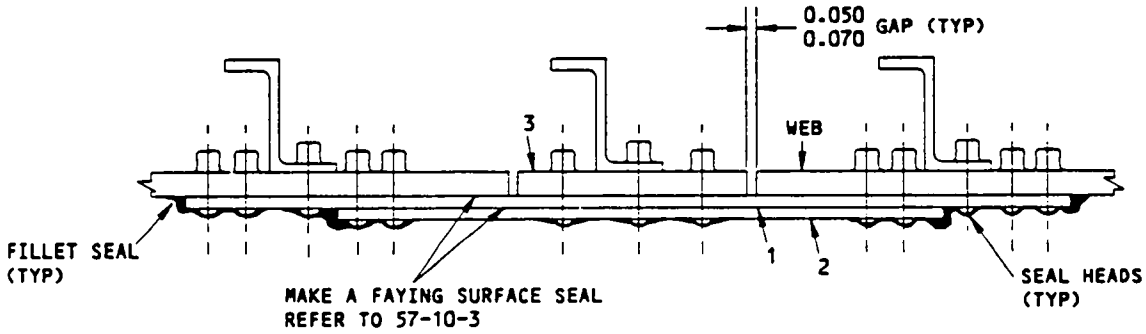

SECTION B-B

DAMAGE AT A STIFFENER
DETAIL II

Wing Rear Spar Web Repair
Figure 2 (Sheet 7)

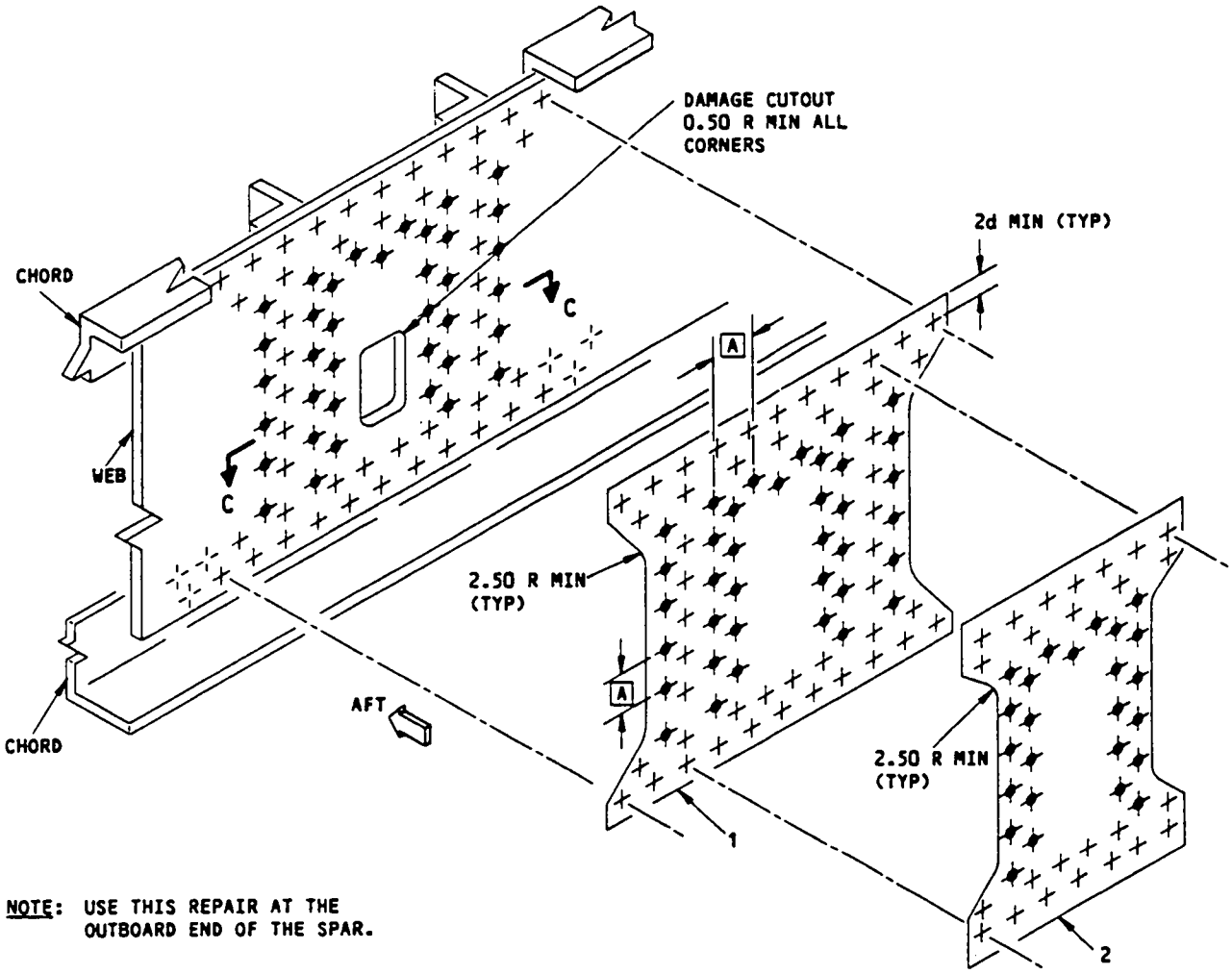

NOTE: USE THIS REPAIR AT THE OUTBOARD END OF THE SPAR.

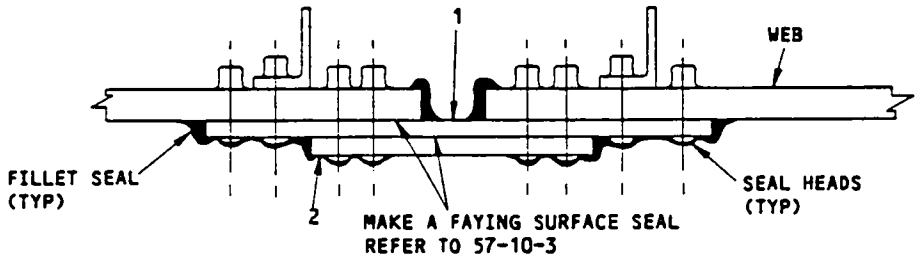

SECTION C-C

DAMAGE BETWEEN STIFFENERS
DETAIL III

Wing Rear Spar Web Repair
Figure 2 (Sheet 8)

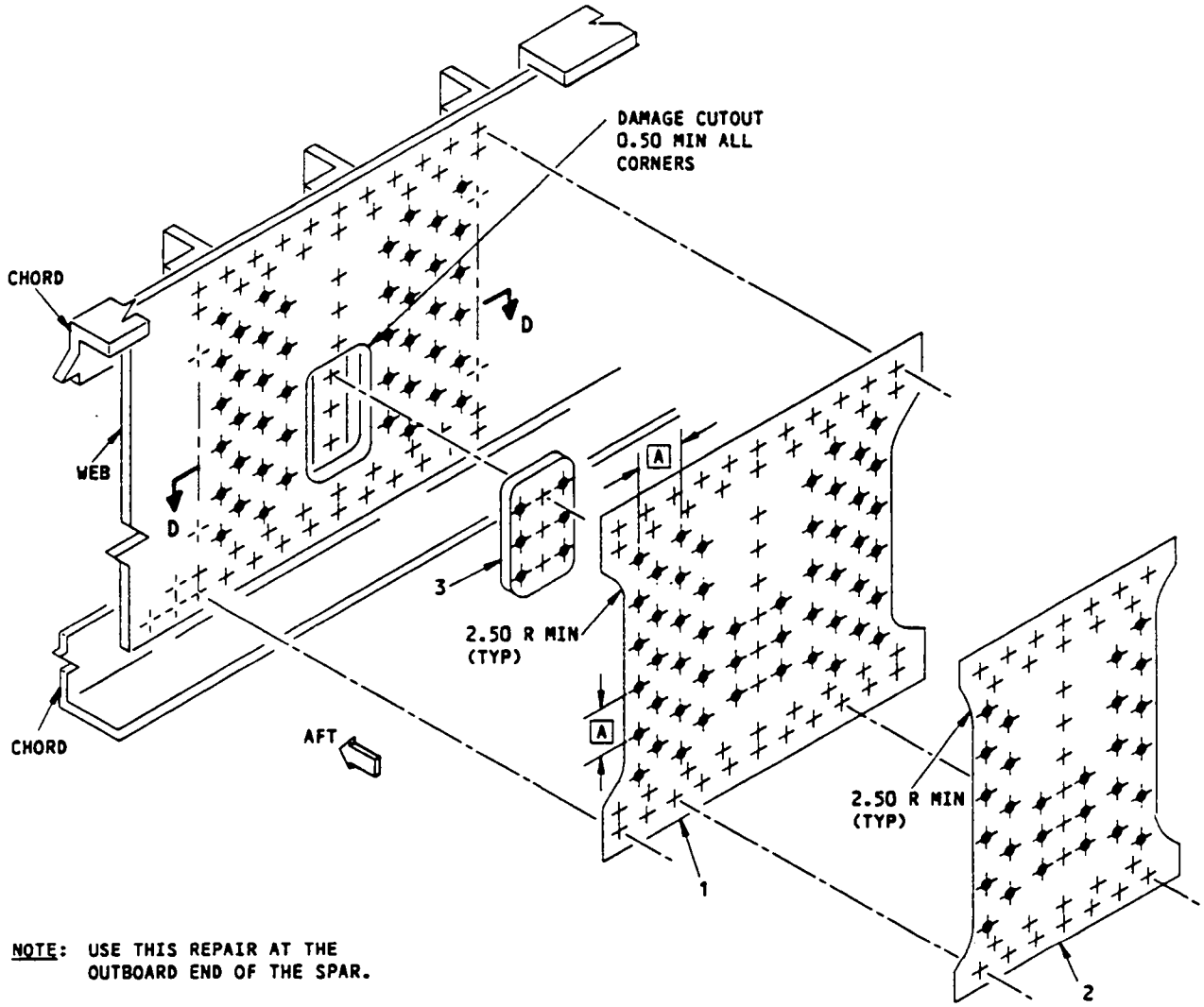

NOTE: USE THIS REPAIR AT THE OUTBOARD END OF THE SPAR.

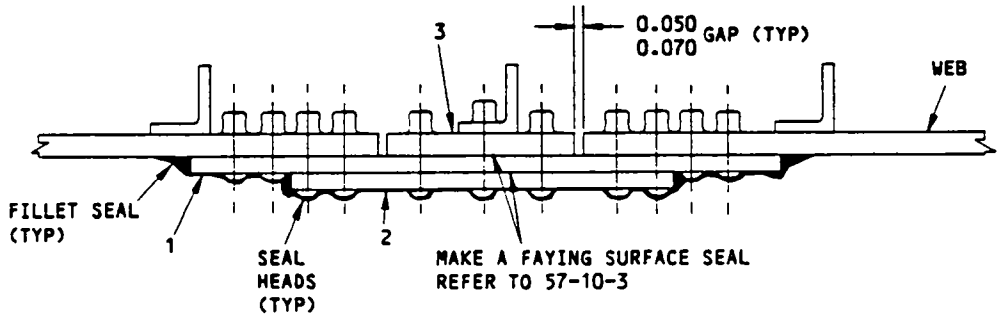

SECTION D-D

DAMAGE AT A STIFFENER
DETAIL IV

Wing Rear Spar Web Repair
Figure 2 (Sheet 9)

SERVICE BULLETIN REPAIRS - WING RIBS

The following service bulletins contain rib repairs which are available for use where specific damage has been encountered. Usually, the service bulletin also covers preventive modification data which operators are encouraged to use to eliminate the need for repair.

DAMAGED AREA	CUM LINE NUMBER EFFECTIVITY [A]	SB NUMBER
WBL 70.85 UPPER CHORD	1 THRU 433, 436, 437	737-57-1087
WBL 135.5 LOWER CHORD	1 THRU 1051	737-57-1186
WBL 70.85 UPPER CHORD	434, 435, 438 THRU 844	737-57-1137

[A] FOR AIRPLANES ON WHICH PREVENTIVE MODIFICATION HAS NOT BEEN ACCOMPLISHED

APPLICABILITY

THIS REPAIR IS APPLICABLE TO CRACKS IN THE OUTBOARD HYDROPRESSED RIBS OF THE WING WS 453, 479, AND 505. THIS REPAIR IS APPLICABLE TO CRACKS IN THE RADIUS OF THE RIB UPPER CHORD THAT ARE 3.0 INCHES OR LESS. TELL BOEING IF A CRACK IS LONGER THAN 3.0 INCHES.

REPAIR INSTRUCTIONS

1. Get access to the repair area.

   WARNING: MAKE SURE THE AREA HAS A GOOD FLOW OF AIR. REFER TO AMM 28-10-0.

2. Drill a 0.25 inch stop drill hole at the end of the crack. Refer to SRM 51-10-1. At the stop drill hole:
   - Do a high frequency eddy current (HFEC) test to make sure there are no cracks.
   - If there are cracks, make the hole 1/16 inch larger in diameter and do the HFEC test again.
   - If there are no cracks, make the hole 1/16 inch larger in diameter.
   - The hole can be made a maximum diameter of 7/16 inch.

   Refer to NDT, part 6, 51-00-00.

3. Make the repair parts. See Table I.
4. Assemble the repair parts and drill the fastener holes. See Detail II.
5. Disassemble the repair parts.
6. Remove the nicks, scratches, gouges, burrs and sharp edges from the repair parts and the rib.
7. Apply a chemical conversion coating to the repair parts and to the bare surfaces of the rib. Refer to SRM 51-10-2.
8. Apply one layer of BMS 10-20, Type II primer to the repair parts and to the bare surfaces of the rib. Refer to SOPM 20-41-02.
9. Install the repair parts with BMS 5-26 sealant between the mating surfaces.
10. Install the fasteners wet with BMS 5-26 sealant in transition fit holes.

    Apply one layer of BMS 10-20, Type II primer to the repair area. Refer to SOPM 20-41-02.

NOTES

- ALL DIMENSIONS ARE IN INCHES, UNLESS GIVEN DIFFERENTLY.
- D = THE FASTENER DIAMETER
- WHEN YOU DO THIS REPAIR, REFER TO THE FOLLOWING:
  - AMM 28-10-0 FOR PURGING OF FUEL STORAGE SYSTEMS
  - NDT PART 6, 51-00-00 FOR EDDY CURRENT PROCEDURES OF GENERAL STRUCTURES
  - SOPM 20-41-02 FOR APPLICATION OF CHEMICAL AND SOLVENT RESISTANT FINISH
  - SRM 51-10-1 FOR DAMAGE CLASSIFICATION
  - SRM 51-10-2 FOR PROTECTIVE TREATMENT OF METAL
  - SRM 51-30 FOR FASTENER CODE, REMOVAL AND INSTALLATION, HOLE SIZES AND EDGE MARGINS
  - SRM 51-30-8 FOR COUNTERSINKING OF HOLES

[A] THE PART 1 CHANNEL MUST BE 0.080 INCH THICK.

[B] USE THE SAME LENGTH AND THICKNESS AS THE INITIAL RADIUS FILLER. THE WIDTH AND RADIUS OF THE RADIUS FILLER MUST ALIGN WITH THE CHANNEL FLANGE.

[C] ADJUST THE FASTENER LOCATIONS AND THE SHAPE OF THE PART 1 CHANNEL AS NECESSARY FOR THE REPAIR.

[D] USE THE SHIM TO KEEP THE GAPS 0.003 INCH OR LESS.

[E] THREE FASTENERS MINIMUM AWAY FROM THE CRACK AND EACH STOP DRILL HOLE.

[F] INSTALL INITIAL TYPE AND DIAMETER BOLT WITH LONGER GRIP LENGTH AS NECESSARY.

FASTENER SYMBOLS

-¦- REFERENCE FASTENER LOCATION.

Wing Inspar Rib Repair - Upper Flange of Hydropressed Ribs
Figure 1 (Sheet 1)

FASTENER SYMBOLS

- INITIAL FASTENER LOCATION. INSTALL A BACB30KK() HEX DRIVE BOLT AND BACC30R() COLLAR.
- REPAIR FASTENER LOCATION. INSTALL A BACB30FM6A HEX DRIVE BOLT AND A BACC30M6 COLLAR.

REPAIR MATERIAL			
PART		QTY	MATERIAL
1	CHANNEL	1	7075-T6 [A]
2	RADIUS FILLER	2	7075-T6 [B]
3	TAPERED SHIM	1	7075-T6 [D]

TABLE I

Wing Inspar Rib Repair - Upper Flange of Hydropressed Ribs
Figure 1 (Sheet 2)

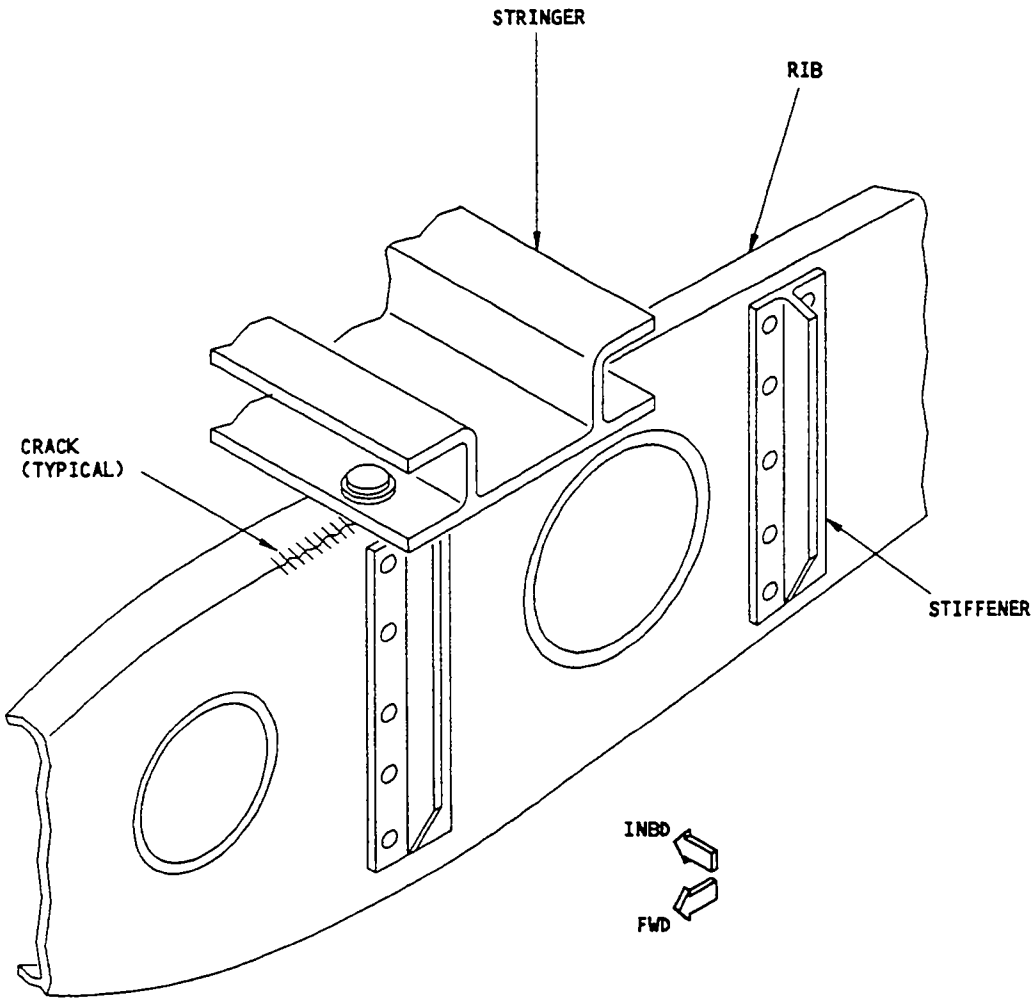

TYPICAL OUTBOARD HYDROPRESSED RIB
DAMAGE LOCATION

DETAIL I

Wing Inspar Rib Repair - Upper Flange of Hydropressed Ribs
Figure 1 (Sheet 3)

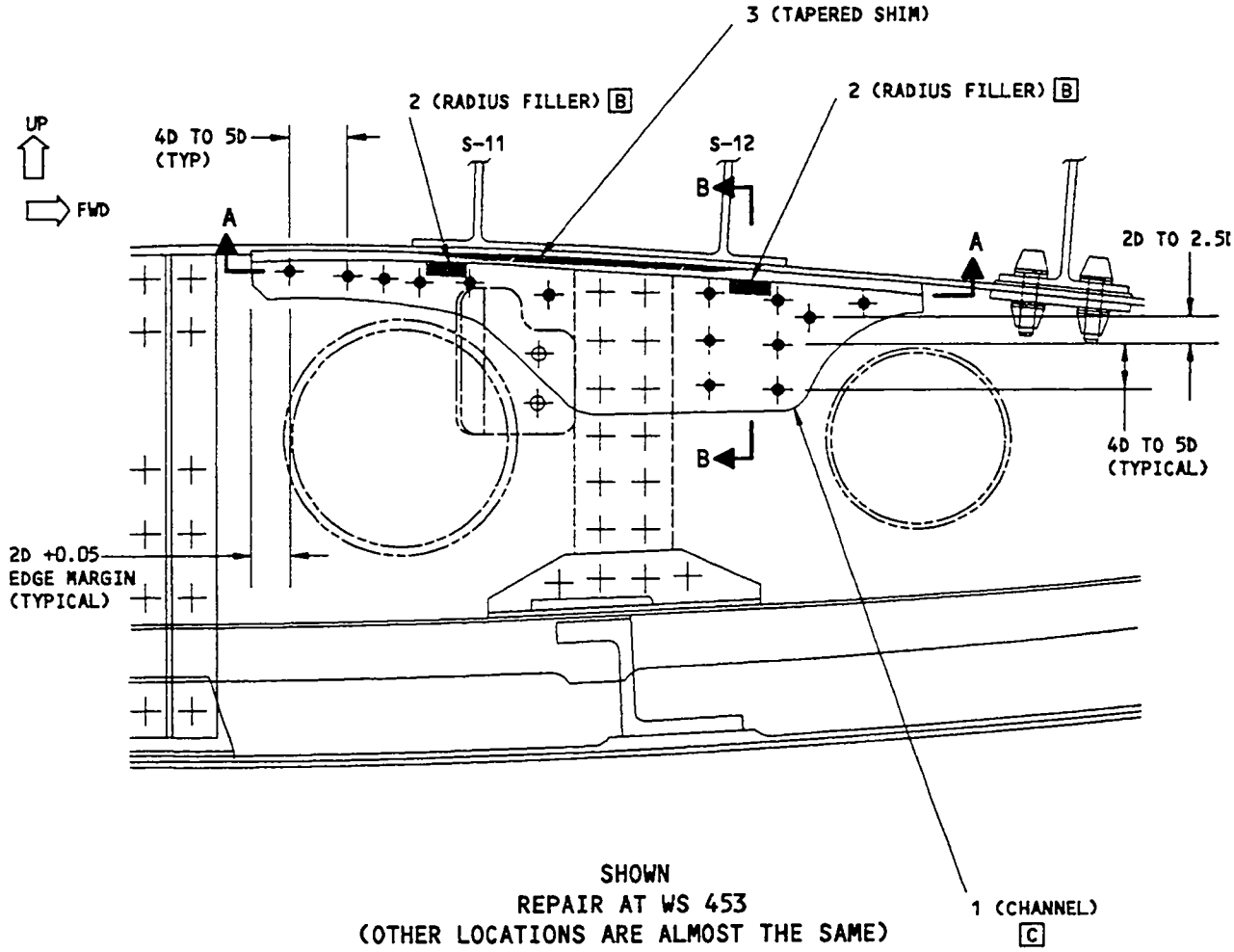

SHOWN
REPAIR AT WS 453
(OTHER LOCATIONS ARE ALMOST THE SAME)

DETAIL II

Wing Inspar Rib Repair - Upper Flange of Hydropressed Ribs
Figure 1 (Sheet 4)

E35972

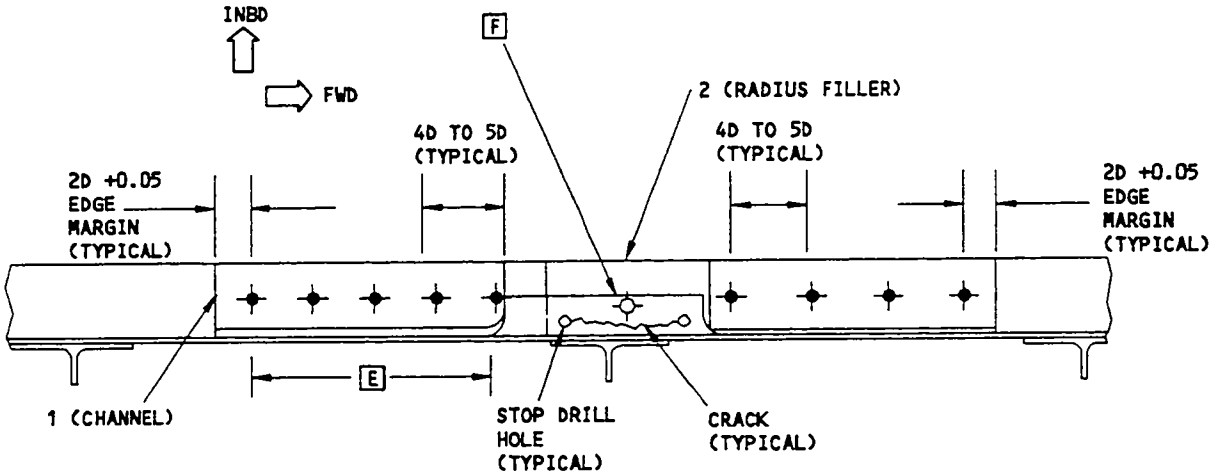

SECTION A-A

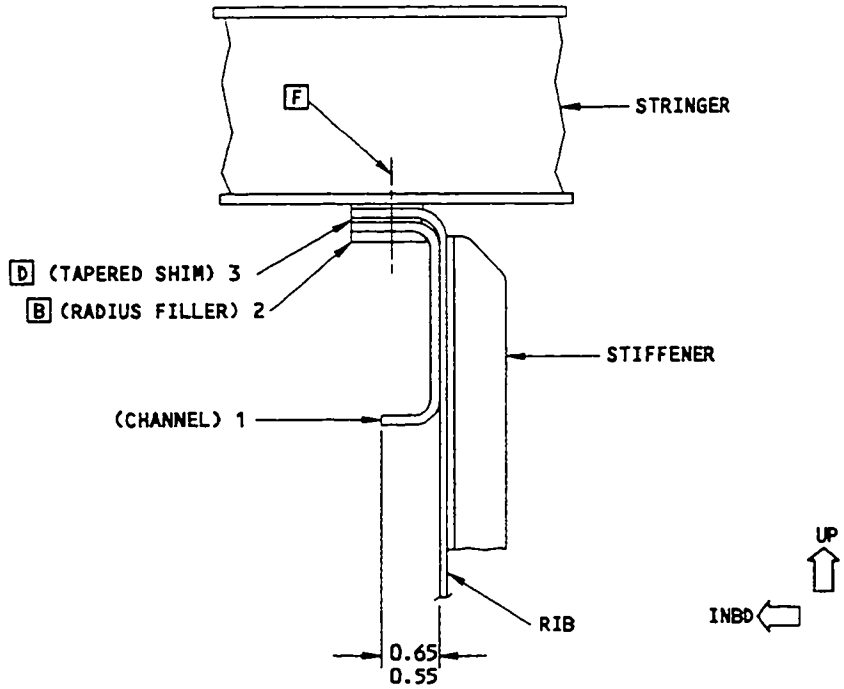

SECTION B-B

Wing Inspar Rib Repair - Upper Flange of Hydropressed Ribs
Figure 1 (Sheet 5)

SERVICE BULLETIN REPAIRS

The following Service Bulletins contain repairs which are available for use where specific damage has been encountered. Usually, the Service Bulletin also covers preventive modification data which operators are encouraged to use to eliminate the need for repair.

DAMAGED AREA	CUM LINE NUMBER EFFECTIVITY [A]	SB NUMBER
WINGS - CENTER WING BOX - STRINGER 13C TO FLOOR BEAM ATTACHMENT MODIFICATION	282 THRU 285, 287 THRU 310	737-57-1099

[A] FOR AIRPLANES ON WHICH PREVENTIVE MODIFICATION HAS NOT BEEN ACCOMPLISHED

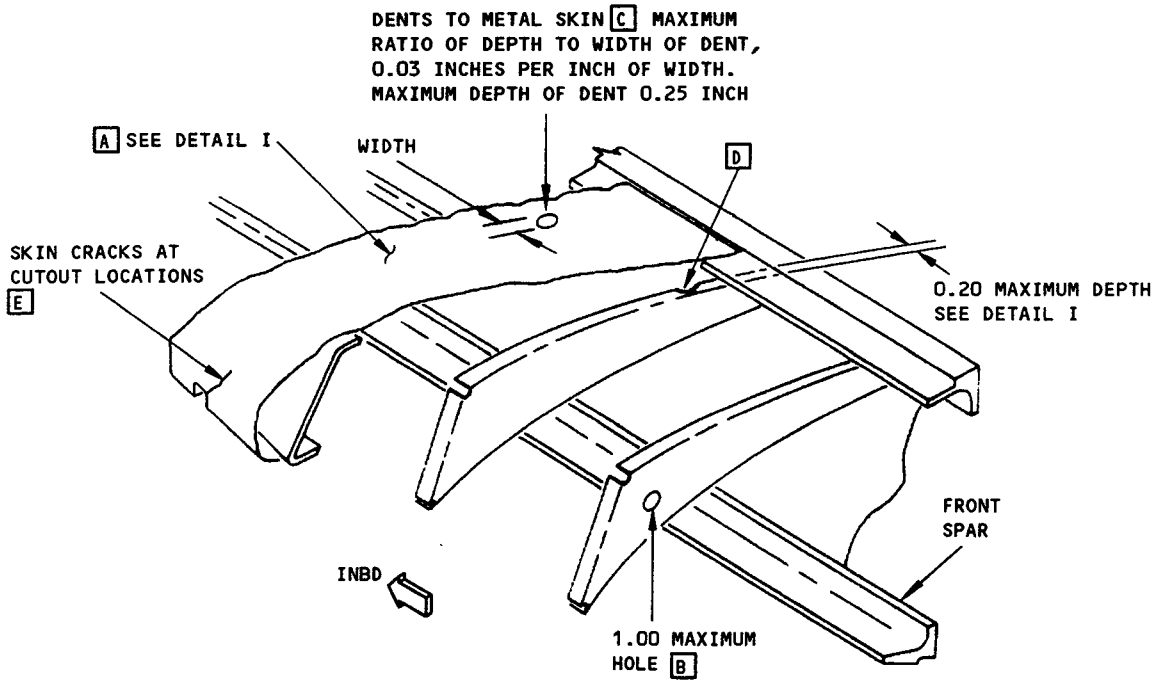

TYPICAL SECTION, WING LEADING EDGE

NOTES

- THE ALLOWABLE DAMAGE LIMITS GIVEN IN THIS FIGURE WILL NOT HAVE AN EFFECT ON A STRUCTURALLY SIGNIFICANT ITEM (SSI) GIVEN IN SRM 51-00-4, FIG. 3. THUS, NO CHANGE TO THE SUPPLEMENTAL STRUCTURAL INSPECTION DOCUMENT (SSID) INSPECTION PROGRAM IS NECESSARY.
- NO HOLES IN PANELS
- FOR AERODYNAMIC SMOOTHNESS REQUIREMENTS SEE 51-70

A MAXIMUM DEPTH OF SCRATCH OR GOUGE NOT TO EXCEED 20 PERCENT MATERIAL THICKNESS

B MAXIMUM ALLOWABLE RIB WEB CROSS SECTIONAL AREA REMOVED INCLUDING EXISTING HOLES SHALL NOT EXCEED 20 PERCENT

C LIMITATION NOTED IS FOR OPTIMUM PERFORMANCE. SEE 51-40-1 FOR FILLING DENTS.

D MAINTAIN EDGE MARGIN ON ALL FASTENERS.

E REFER TO DETAIL II FOR DAMAGE TO THE FIXED LEADING EDGE SKIN AT TRACK, ACTUATOR, AND THERMAL ANTI-ICE DUCT CUTOUT LOCATIONS. (NOTE: DAMAGE AT UP-STOP CUTOUTS IS NOT INCLUDED). BLEND OUT THE DAMAGED AREA, MAINTAINING A BLEND OUT LENGTH OF 0.75 INCH MAXIMUM AND USING A MINIMUM RADIUS OF 0.50 INCH. THE DAMAGE MUST BE A MINIMUM LENGTH OF 2D (D = DIAMETER OF HOLE) FROM A FASTENER HOLE. MULTIPLE BLENDOUTS ARE PERMITTED IF THE TOTAL BLENDOUT AREA IS WITHIN THESE LIMITS.

DO AN EDDY CURRENT INSPECTION TO MAKE SURE THAT ALL DAMAGE HAS BEEN REMOVED. REMOVE ALL BURRS AND SHARP EDGES. TOUCH UP ALL TRIMMED EDGES WITH BRUSH ALODINE COLORED CHEMICAL CONVERSION COATING AND ONE COAT OF BMS 10-79, TYPE III PRIMER.

MAKE SURE THE BLENDED OUT AREA WILL BE COVERED BY THE SEAL DOORS WHEN THE SLATS ARE FULLY EXTENDED.

Allowable Damage - Wing Leading Edge
Figure 1 (Sheet 1)

BOEING PROPRIETARY - Copyright © - Unpublished Work - See title page for details.

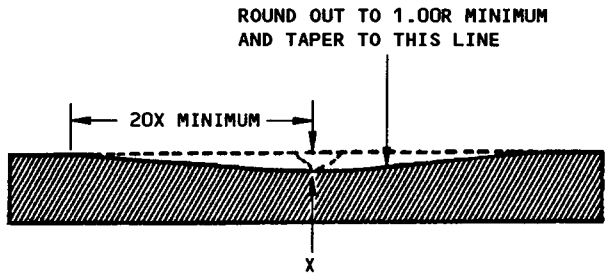

SECTION THROUGH GOUGE

DETAIL I

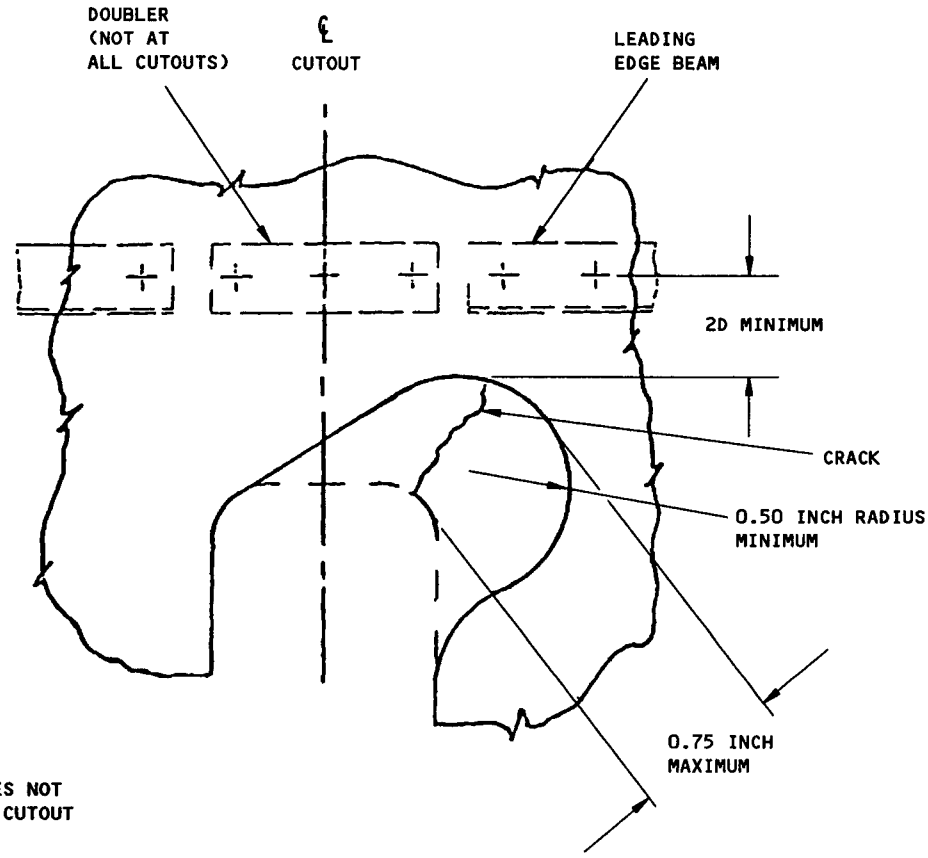

NOTE: THIS BLENDOUT DOES NOT APPLY TO UP-STOP CUTOUT LOCATIONS

D = HOLE DIAMETER

TYPICAL TRACK/ACTUATOR/THERMAL ANTI-ICE DUCT CUTOUT
DETAIL II

Allowable Damage - Wing Leading Edge
Figure 1 (Sheet 2)

BOEING PROPRIETARY - Copyright © - Unpublished Work - See title page for details.

REF. DWG 65-50818
65-50819
65-50773

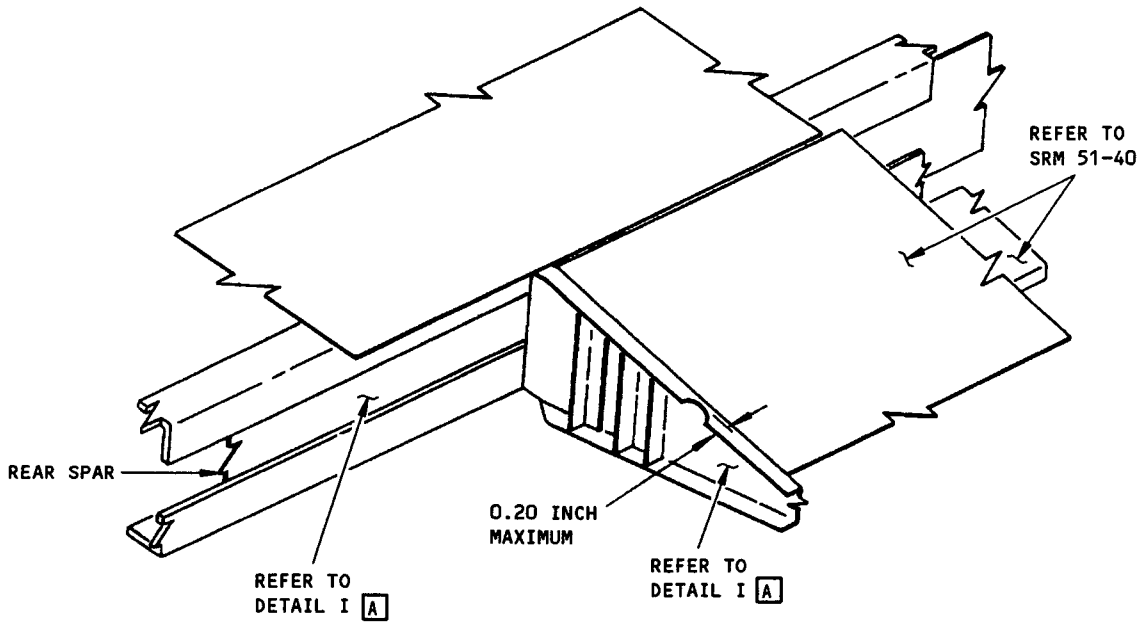

TYPICAL SECTION - WING TRAILING EDGE

NOTES

- THE ALLOWABLE DAMAGE LIMITS GIVEN IN THIS FIGURE WILL NOT HAVE AN EFFECT ON A STRUCTURALLY SIGNIFICANT ITEM (SSI) GIVEN IN SRM 51-00-4, FIG. 3. THUS, NO CHANGE TO THE SUPPLEMENTAL STRUCTURAL INSPECTION DOCUMENT (SSID) INSPECTION PROGRAM IS NECESSARY.
- KEEP THE EDGE MARGINS FOR ALL THE FASTENERS.
- THE REMOVAL OF CROSS-SECTIONAL AREA FROM A RIB (TO INCLUDE HOLES) MUST NOT BE MORE THAN 20 PERCENT.
- HOLES IN THE BALANCE PANELS AREAS ARE NOT PERMITTED.

A SCRATCHES OR GOUGES THAT ARE DEEPER THAN 20 PERCENT OF THE MATERIAL THICKNESS ARE NOT PERMITTED.

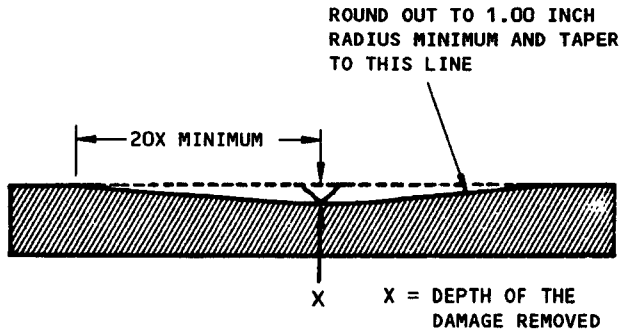

SECTION THROUGH DAMAGED AREA
DETAIL I

Allowable Damage Wing Trailing Edge
Figure 2

BOEING PROPRIETARY - Copyright © - Unpublished Work - See title page for details.

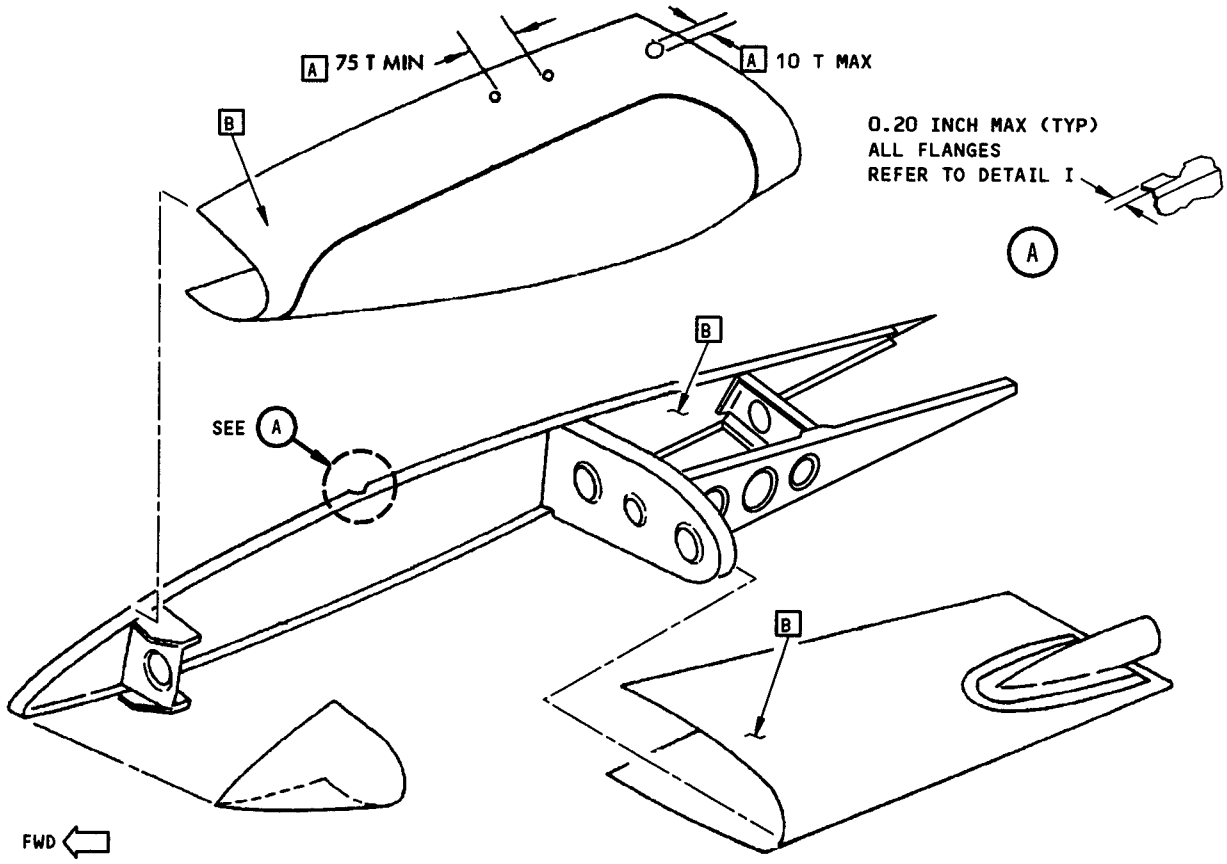

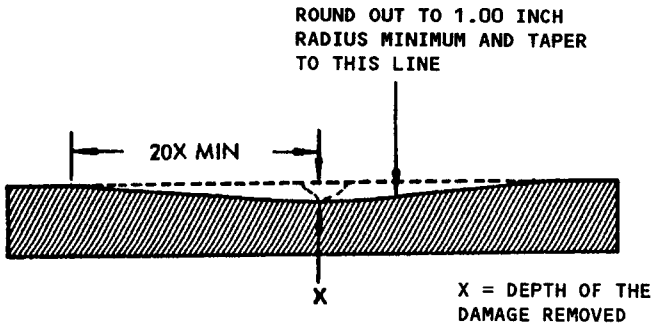

SECTION THROUGH DAMAGED AREA
DETAIL I

NOTES

- THE ALLOWABLE DAMAGE LIMITS GIVEN IN THIS FIGURE WILL NOT HAVE AN EFFECT ON A STRUCTURALLY SIGNIFICANT ITEM (SSI) GIVEN IN SRM 51-00-4, FIG. 3. THUS, NO CHANGE TO THE SUPPLEMENTAL STRUCTURAL INSPECTION DOCUMENT (SSID) INSPECTION PROGRAM IS NECESSARY.
- KEEP THE EDGE MARGINS FOR ALL THE FASTENERS.
- REFER TO SRM 51-70 FOR AERODYNAMIC SMOOTHNESS REQUIREMENTS.
- THERE ARE NO STRUCTURAL LIMITS FOR DENTS IN THE WING TIP SKIN. HOWEVER, FOR THE BEST AIRPLANE PERFORMANCE, WE RECOMMEND THAT YOU REMOVE LARGE DENTS AS SOON AS POSSIBLE.
- THE REMOVAL OF CROSS-SECTIONAL AREA FROM THE SPAR WEB (TO INCLUDE HOLES) MUST NOT BE MORE THAN 25 PERCENT.
- THESE ALLOWABLE DAMAGE LIMITS ARE NOT APPLICABLE TO PLEXIGLAS.

A T = SHEET THICKNESS

B SCRATCHES OR GOUGES THAT ARE DEEPER THAN 25 PERCENT OF THE MATERIAL THICKNESS ARE NOT PERMITTED. REFER TO DETAIL I.

Allowable Damage Wing Tip
Figure 3

BOEING PROPRIETARY - Copyright © - Unpublished Work - See title page for details.

THIS DATA INTENTIONALLY DELETED.
REFER TO SB 737-57-1071 FOR REWORK
OF THE TRUNNION BEARING HOLE.

Allowable Damage - MLG Trunnion Support Beam -
Trunnion Bearing Hole
Figure 4

BOEING PROPRIETARY - Copyright © - Unpublished Work - See title page for details.

REF DWG
65-82770

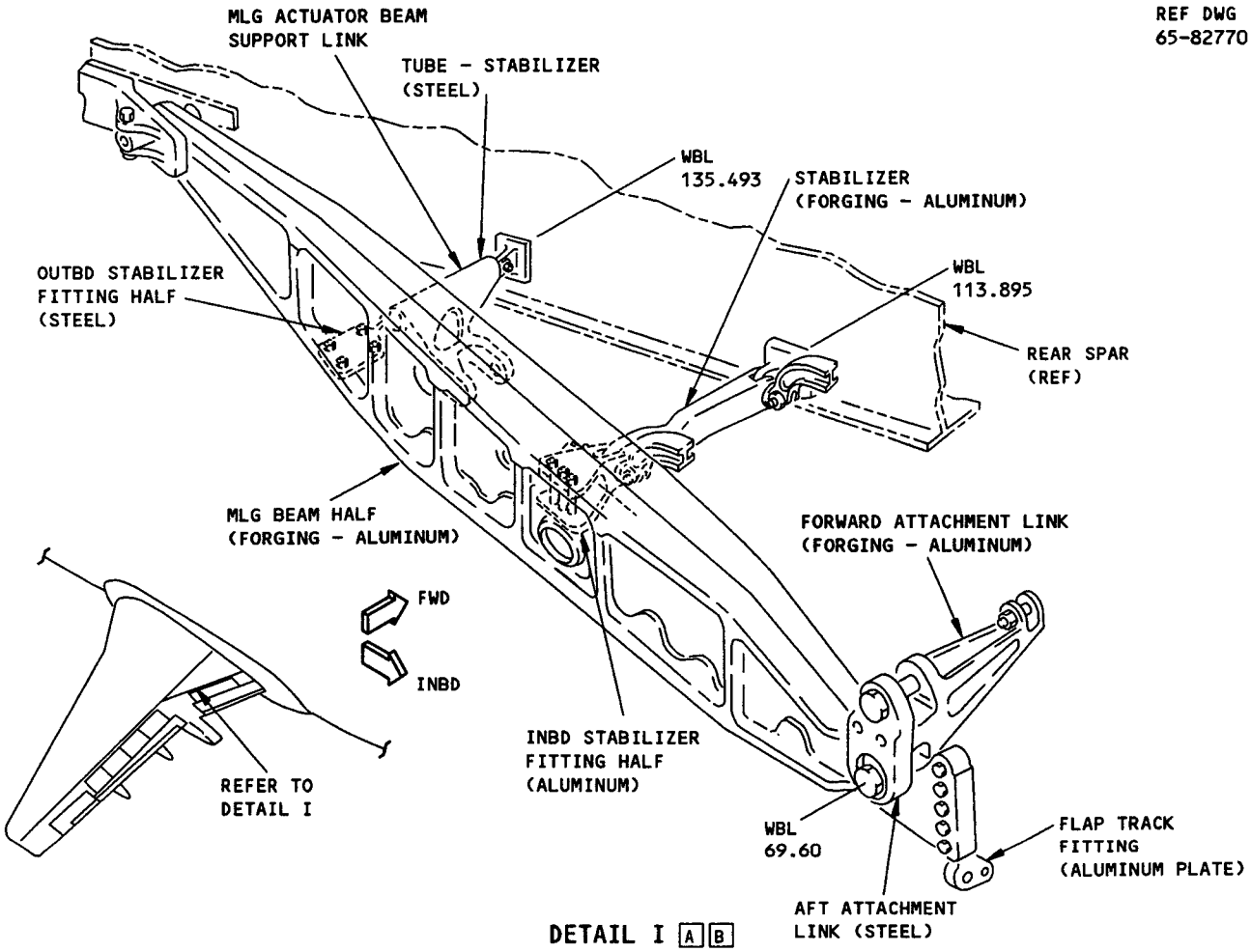

DETAIL I [A][B]

NOTES

- THE ALLOWABLE DAMAGE LIMITS GIVEN IN THIS FIGURE WILL NOT HAVE AN EFFECT ON A STRUCTURALLY SIGNIFICANT ITEM (SSI) GIVEN IN SRM 51-00-4, FIG. 3. THUS, NO CHANGE TO THE SUPPLEMENTAL STRUCTURAL INSPECTION DOCUMENT (SSID) INSPECTION PROGRAM IS NECESSARY.
- ALL MACHINED SURFACES MUST HAVE A ROUGHNESS OF 125 MICROINCHES R_a, UNLESS A DIFFERENT ROUGHNESS IS SPECIFIED.

[A] FOR REPAIR OF MLG BEAM AND FITTINGS, CONTACT THE BOEING COMPANY FOR REPAIR INSTRUCTIONS.

[B] NO BLEND-OUT IS PERMITTED IN THE AREA BETWEEN THE VERTICAL FLANGES, LOCATED INBOARD AND OUTBOARD OF THE TRUNNION BEARING BORE.

IF THE UPPER FLANGE SURFACE OF THE MLG BEAM HAS CORROSION OR IS WORN, DO THE PROCEDURE THAT FOLLOWS:

- REMOVE CORROSION AND WORN AREA AT A 6 TO 1 TAPER. IF THE DEPTH OF THE REMOVED AREA IS MORE THAN 0.04 INCH, CONTACT THE BOEING COMPANY
- DO A HIGH FREQUENCY EDDY CURRENT (HFEC) INSPECTION TO MAKE SURE THAT ALL DAMAGE HAS BEEN REMOVED. REFER TO NDT PART 6, 51-00-00, FOR THE HFEC INSPECTION PROCEDURE.
- FLAP PEEN THE SMOOTH, BARE SURFACE TO A 0.014A INTENSITY WITH A 200 PERCENT COVERAGE. REFER TO SOPM 20-10-03
- APPLY A CHEMICAL CONVERSION COATING TO FLAP PEENED AREA. APPLY ONE COAT OF BMS 10-11, TYPE 1 PRIMER. REFER TO SRM 51-10-2
- APPLY ONE LAYER OF BMS 10-11, TYPE II ENAMEL TO THE FLAP PEENED AREA. REFER TO SOPM 20-41-02

  OPTION: APPLY TWO COATS OF BMS 10-11, TYPE I PRIMER AFTER THE CHEMICAL CONVERSION COATING.

Main Landing Gear Beam Allowable Damage
Figure 5

BOEING PROPRIETARY - Copyright © - Unpublished Work - See title page for details.

ITEM	UPPER CHORD		WEB OR FORMED SECTION		LOWER CHORD	
	MATERIAL	REPAIR FIG. NO.	MATERIAL	REPAIR FIG. NO.	MATERIAL	REPAIR FIG. NO.
1			AND10134-1003 2024-T4			
2			AND10135-1201 2024-T4			
3			0.063 CLAD 2024-T3			
4			MACHINED 7079-T651 F			
5			ALUMINUM CASTING 356-T6			
6			0.032 CLAD 7075-T6			
7			0.063 CLAD 2024-T42			
8	0.063 CLAD 2024-T42		0.063 6061-T6			
9			0.063 CLAD 7075-T6			
10	0.063 CLAD 2024-T42		0.016 + 0.016 CLAD 2024-T3			
11			BAC1514-1734 2024-T3511			
12			0.050 CLAD 2024-T4			
13			0.063 CLAD 2024-T4			
14			AND10134-0702 2024-T3511			
15			BAC1506-1878 2024-T3511			
16			0.016 + 0.016 CLAD 2024-T3			

Wing Leading Edge Structure - Material Identification
Figure 1 (Sheet 1)

ITEM	UPPER CHORD		WEB OR FORMED SECTION		LOWER CHORD	
	MATERIAL	REPAIR FIG. NO.	MATERIAL	REPAIR FIG. NO.	MATERIAL	REPAIR FIG. NO.
17			0.050 2024-T4			
18			MACHINED FROM 7075-T651			
19			MACHINED FROM 4330M HT 220-240 KSI			
20	BAC1506-1878 2024-T3511					
21	BAC1493-197 2024-T42					
22	BAC1490-2734 2024-T42					
23	0.050 2024-T42					
24					BAC1490-63 2024-T42	
25			MACHINED FROM 7075-T7351 F			
26			MACHINE FROM AL CASTING 356-T6			
27			MACHINED FROM 7075-T7351			

Wing Leading Edge Structure - Material Identification
Figure 1 (Sheet 2)

NOTES

[A] TYPICAL UNLESS OTHERWISE NOTED

[B] RIGHT SIDE 0.020 + 0.020 CLAD 2024-T3

[C] RIGHT SIDE 0.063 CLAD 2024-T42

[D] FOR CUM LINE NUMBERS: 1 THRU 279, 286, 289

[E] FOR CUM LINE NUMBERS: 280 THRU 285, 287, 288, 290 THRU 648

[F] HINGE RIBS OF 7079-T651 MATERIAL HAVE BEEN REPLACED BY HINGE RIBS OF 7075-T7351 MATERIAL IN PRODUCTION; HINGE RIBS OF 7075-T7351 MATERIAL ARE RECOMMENDED WHEN EXISTING STOCKS OF 7079-T651 ARE EXHAUSTED.

[G] DELETED

[H] FOR AIRPLANES WHICH HAVE INCORPORATED SB 57-1078

[J] FOR CUM LINE NUMBERS: 649 AND ON

[K] FOR CUM LINE NUMBERS: 22, 29, 41, 43, 49, 50, 51, 53, 61, 63, 65, 67, 69, 71

[L] FOR CUM LINE NUMBERS: 280 THRU 285, 287, 288, 290 THRU 1013, 1019 (BOEING REF: P7001-P8499)

Wing Leading Edge Structure - Material Identification
Figure 1 (Sheet 3)

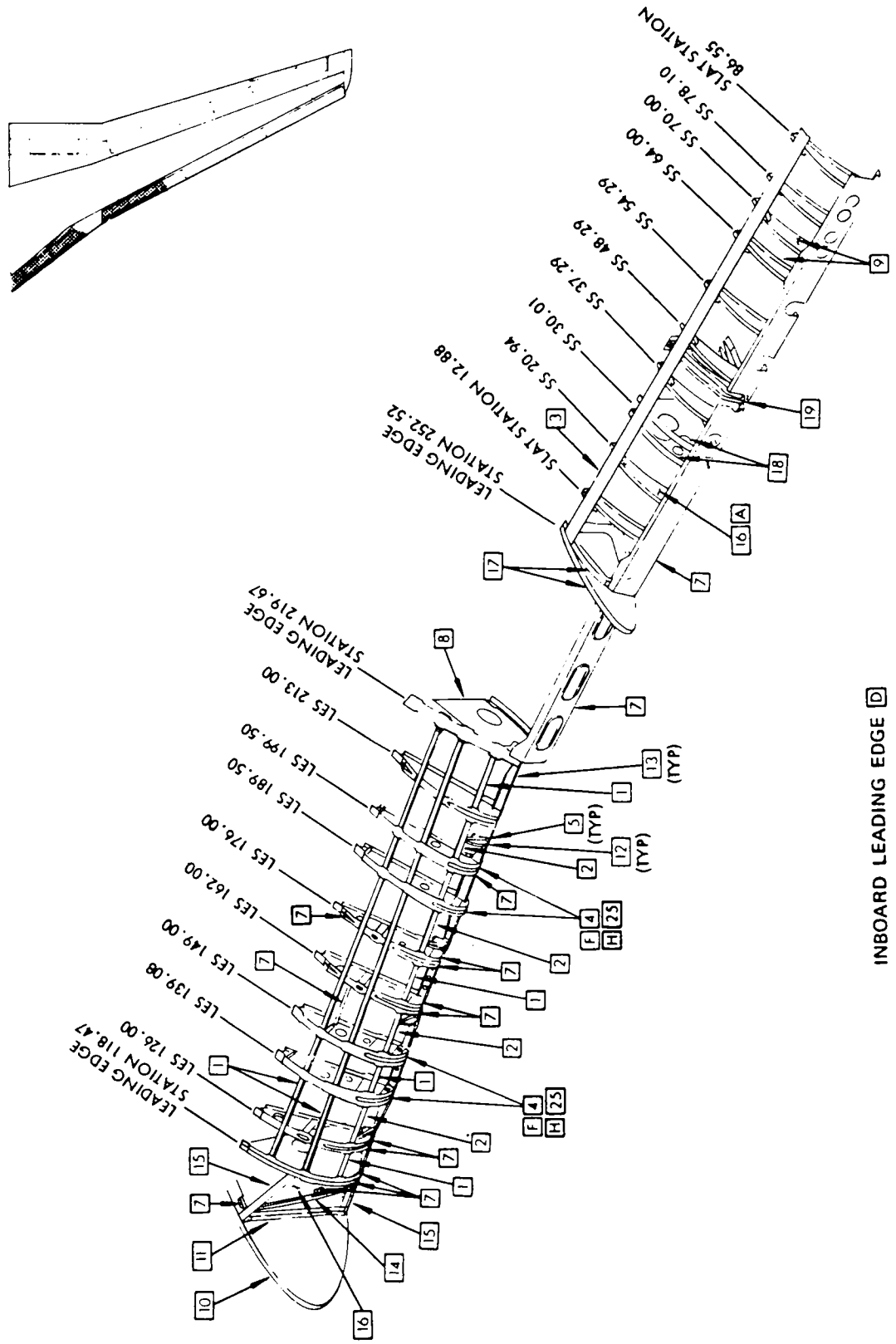

Wing Leading Edge Structure - Material Identification
Figure 1 (Sheet 4)

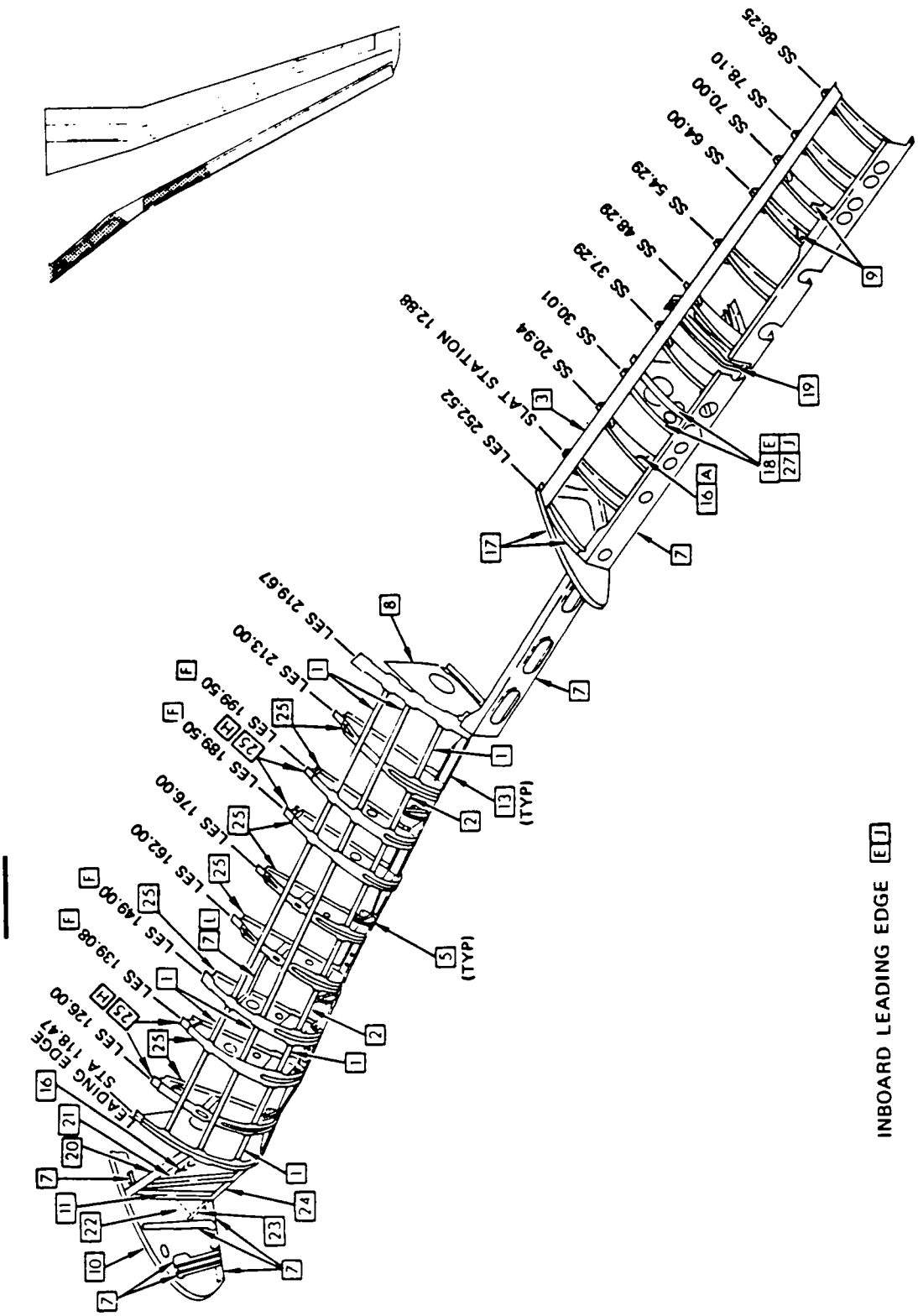

Wing Leading Edge Structure - Material Identification
Figure 1 (Sheet 5)

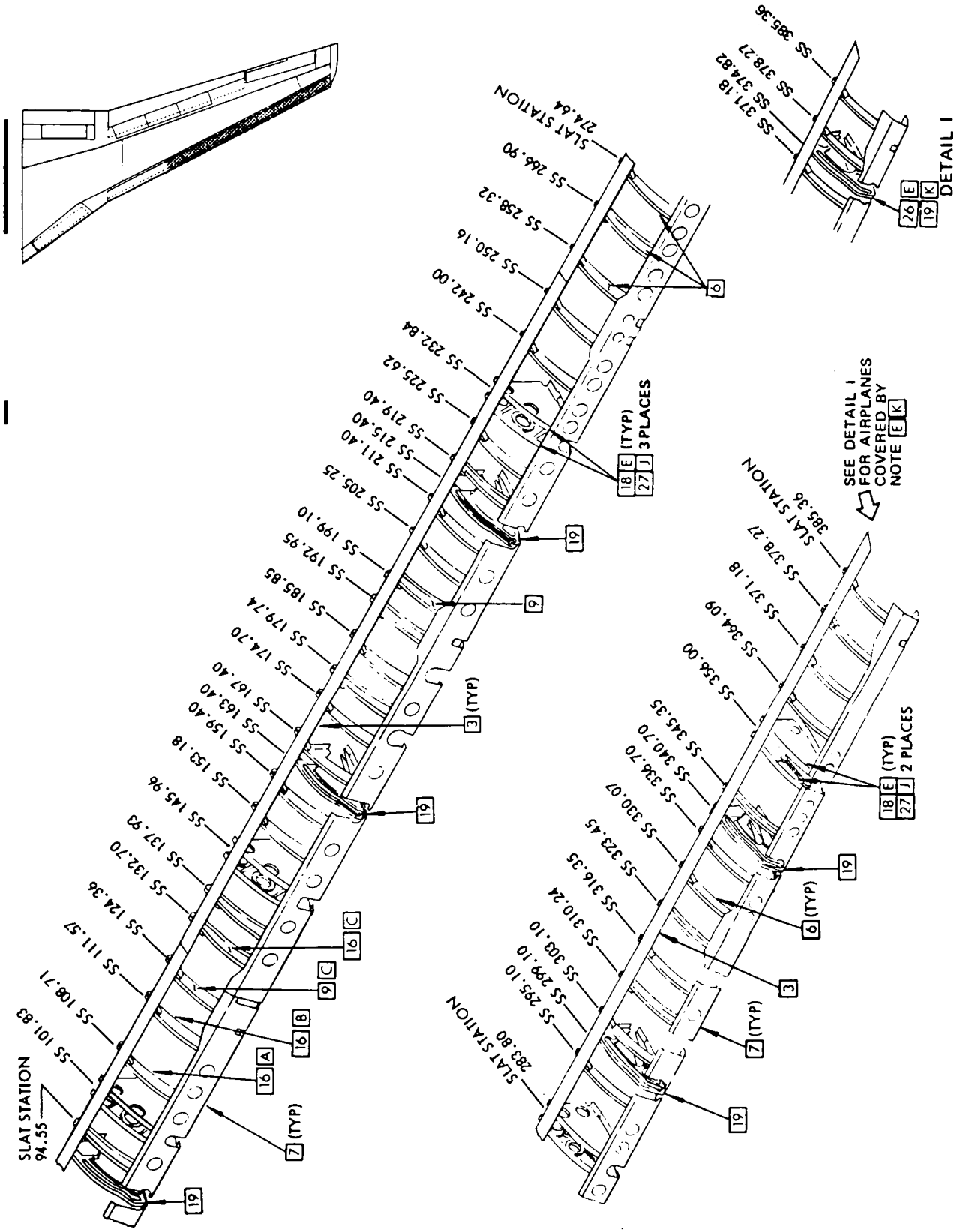

Wing Leading Edge Structure - Material Identification
Figure 1 (Sheet 6)

ITEM	MATERIAL	REPAIR FIG. NO.
1	7079-T652 FORGING	
2	7079-T6 FORGING	
3	0.040 CLAD 2024-T3	
4	0.040 CLAD 2024-T42	
5	BAC1520-1428 7075-T6511	
6	BAC1520-1426 2024-T3511	
7	0.040 CLAD 7075-T6	
8	0.050 CLAD 7075-T6	
9	0.040 CLAD 2024-T4	
10	7075-T651	
11	4340 MOD STEEL FORGING	
12	FORGING 7075-T73	
13	BAC1506-1900 2024-T3511	
14	BAC1505-100411 7075-T6	
15	AND10136-1503 2024-T4	
16	356-T6 CASTING OPTIONAL TO 12	

ITEM	MATERIAL	REPAIR FIG. NO.
17	0.032 CLAD 7075-T6	
18	4330 MOD STEEL FORGING	
19	0.05 CLAD 2024-T42	
20	0.063 CLAD 7075-T6	
21	FORGING 7075-T7352 SHOT PEENED	

Wing Trailing Edge Structure Identification
Figure 2 (Sheet 1)

NOTES

[A] ATTACHMENT FITTINGS

[B] FOR CUM LINE NUMBERS: 2 THRU 12, 14, 15, 17 THRU 19, 21 THRU 28, 32, 35, 52, 98, 108

[C] FOR CUM LINE NUMBERS; 1, 13, 16, 20, 29 THRU 31, 33, 34, 36 THRU 51, 53 THRU 97, 99 THRU 107, 109 AND ON

[D] FOR CUM LINE NUMBERS: 1 THRU 93, 103

[E] FOR CUM LINE NUMBERS: 94 THRU 102, 104 AND ON

[F] IMPROVED TRACKS INSTALLED FROM CUM LINE NUMBER 362. REFER TO SB 57-1084 FOR INSPECTION PROCEDURES AND ALLOWABLE DAMAGE LIMITS FOR AIRPLANES WITHOUT IMPROVED TRACKS

[G] FORGINGS OF 7079-T652 HAVE BEEN REPLACED IN PRODUCTION BY FORGINGS OF 7075-T7352; FORGINGS OF 7075-T7352 ARE RECOMMENDED WHEN STOCKS OF 7079-T652 ARE EXHAUSTED

[H] FORGINGS OF 7079-T6 HAVE BEEN REPLACED IN PRODUCTION BY FORGINGS OF 7075-T73. FORGINGS OF 7075-T73 ARE RECOMMENDED WHEN STOCKS OF 7079-T6 ARE EXHAUSTED

[J] FOR AIRPLANES ON WHICH SB 57-1038 OR 57-1071 HAS BEEN INCORPORATED. SURFACE OF HOLE ON LANDING GEAR SUPPORT BEAM WAS FLAP PEENED (SHOT PEENED) PRIOR TO INSTALLATION OF BUSHING. SB 57-1038 HAS BEEN SUPERSEDED BY SB 57-1071

[K] FOR AIRPLANES WHICH HAVE INCORPORATED SB 57-1073

[L] FOR CUM LINE NUMBERS: 1008 AND ON

[M] FOR CUM LINE NUMBERS: 1 THRU 93, 103 IF HINGE FITTING MADE OF [12] IS USED

[N] OPTIONAL FOR CUM LINE NUMBERS: 1 THRU 93, 103

[O] FOR (BOEING REF: P4351 THRU P4399, P4801 THRU P5499, P8980 THRU P9995)

[P] FOR ALL AIRPLANES NOT LISTED IN [E] AND [O]

Wing Trailing Edge Structure Identification
Figure 2 (Sheet 2)

REF DWG
65-46410

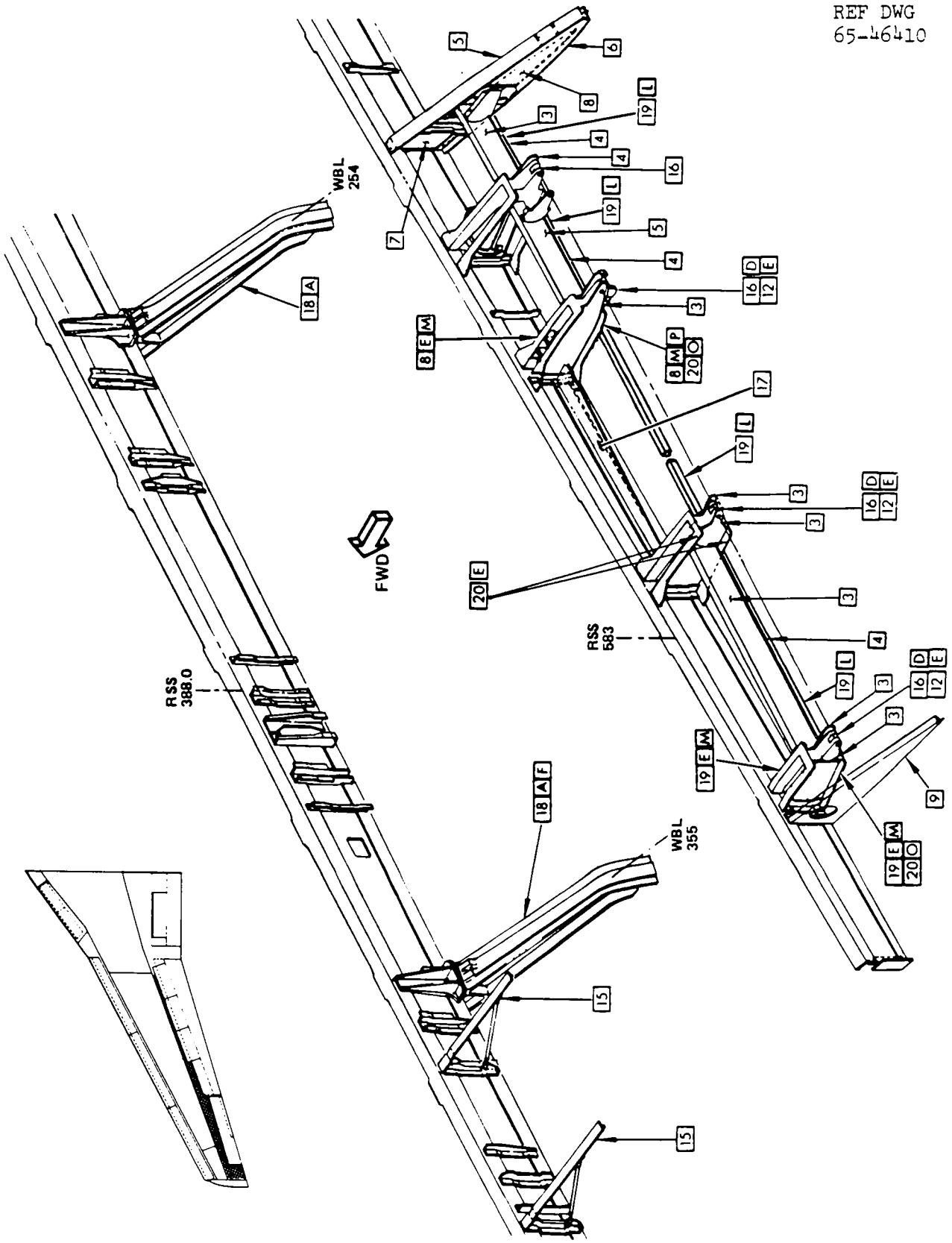

Wing Trailing Edge Structure Identification
Figure 2 (Sheet 3)

REF DWG
65-46410

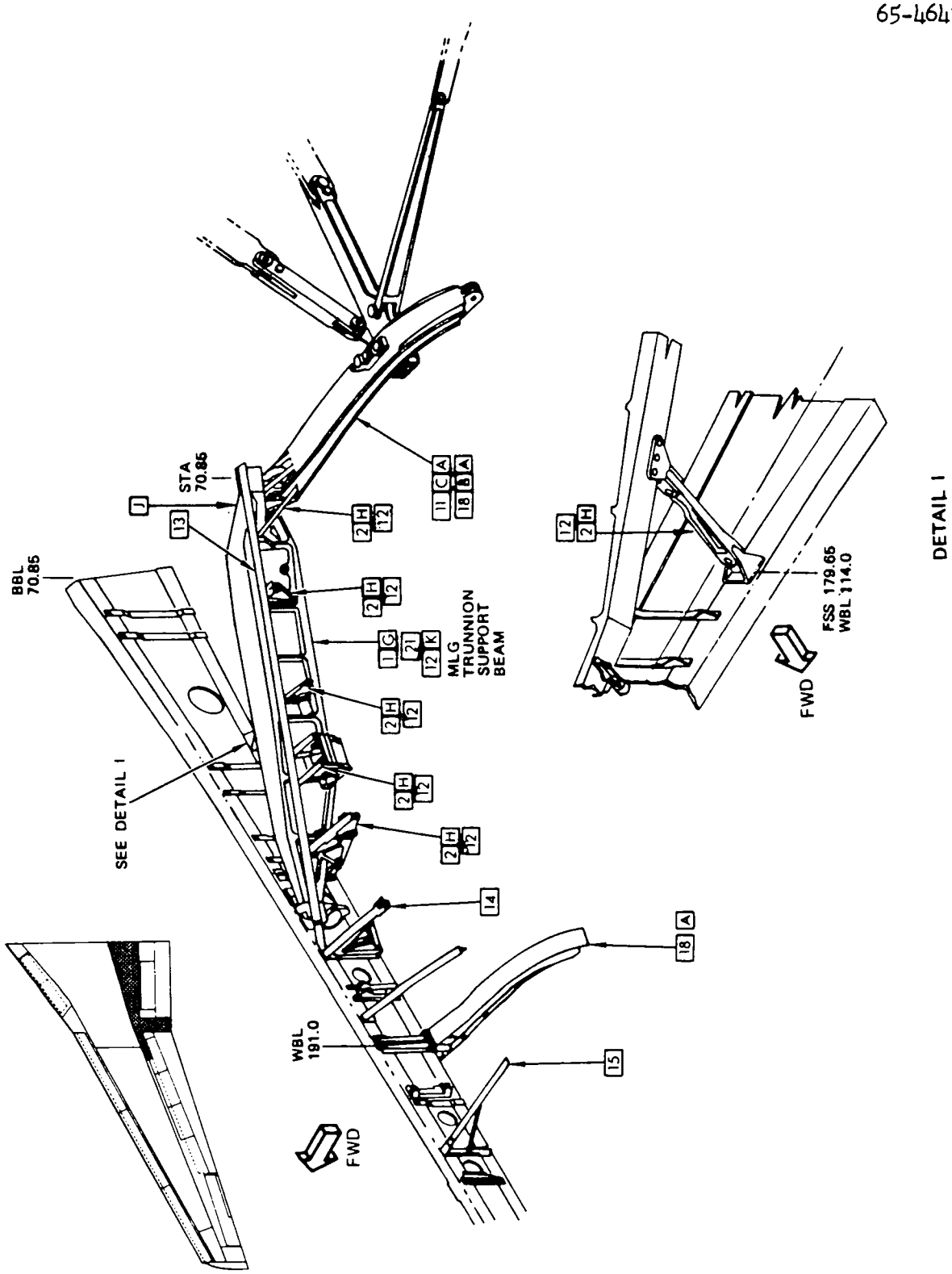

Wing Trailing Edge Structure Identification
Figure 2 (Sheet 4)

ITEM	MATERIAL	REPAIR FIG. NO.
1	0.050 CLAD 2024-T4	57-20-5 FIG.1,2
2	BAC1520-1424 2024-T3	
3	ACRYLIC SHEET	
4	0.040 CLAD 2024-T4	
5	0.080 CLAD 2024-T4	
6	0.063 CLAD 2024-T4	
7	PLASTIC GLASS FABRIC	
8	0.080 6061-T6	
9	AND10134-0602 7075-T6	
10	0.040 CLAD 2024-T4	
11	DISCHARGE STRAP 0.040 CLAD 2024-T3	

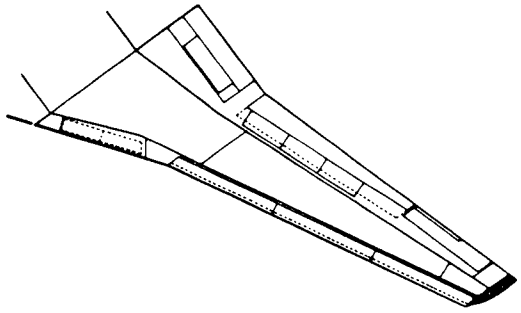

Wingtip Structure Identification
Figure 3 (Sheet 1)

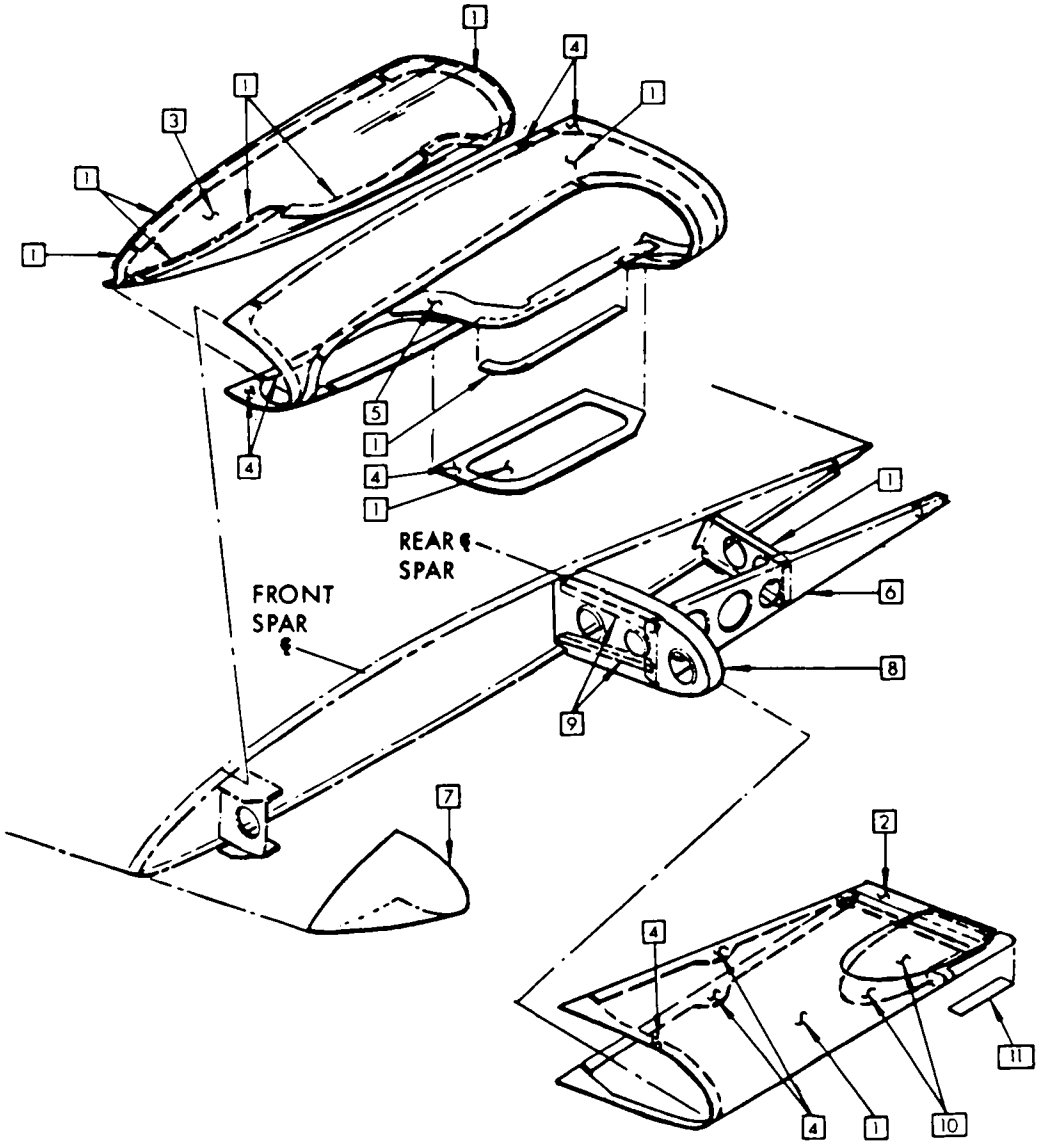

Wingtip Structure Identification
Figure 3 (Sheet 2)

REF. DWG
65-49509

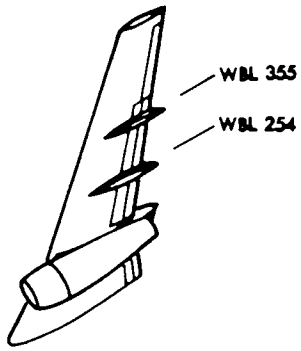

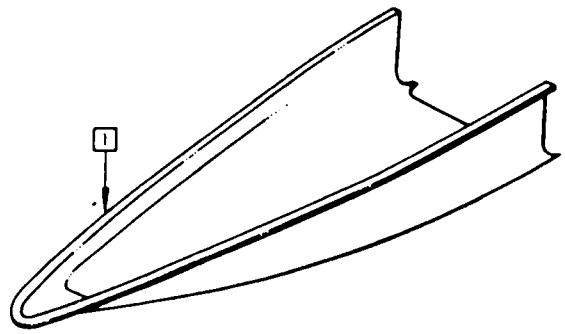

FORWARD OUTBOARD FAIRINGS

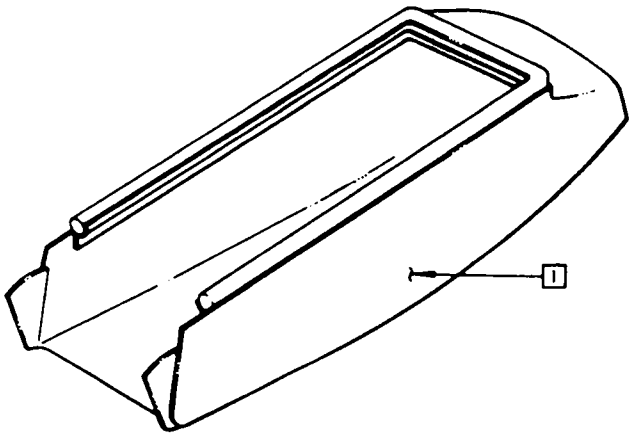

CENTER OUTBOARD FAIRINGS

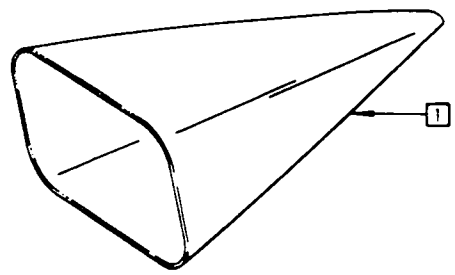

AFT OUTBOARD FAIRINGS

ITEM	MATERIAL	REPAIR FIG. NO.
1	PLASTIC GLASS FABRIC SANDWICH PLASTIC HONEYCOMB CORE	

Flap Track Fairing Structure Identification
Figure 4

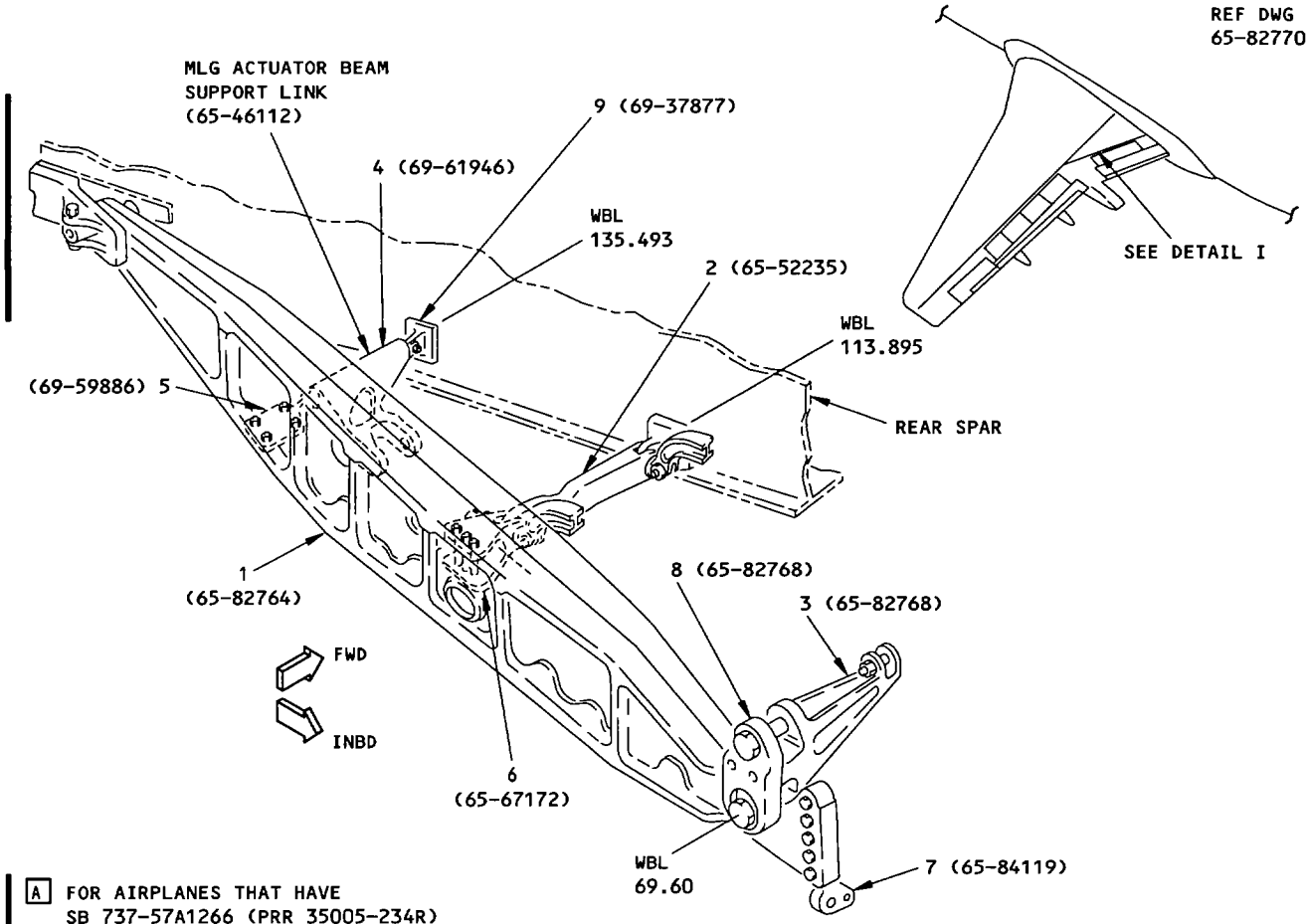

[A] FOR AIRPLANES THAT HAVE SB 737-57A1266 (PRR 35005-234R) INCORPORATED.

DETAIL I

ITEM	DESCRIPTION	GAGE	MATERIAL	EFFECTIVITY
1	BEAM - BONDED ASSY BEAM HALF		 FORGING 7175-T73652	
2	STABILIZER		FORGING 7075-T73 (OPTIONAL: FORGED BLOCK 7075-T73)	
3	LINK - FWD ATTACHMENT		FORGING 7075-T73	
4	TUBE - STABILIZER		4330 MOD STEEL HT TR TO 180-200 KSI	
5	STABILIZER FITTING HALF - OUTBD		4330 MOD STEEL BAR HT TR TO 180-200 KSI	
6	STABILIZER FITTING HALF - INBD		7075-T7351 PLATE	
7	FLAP TRACK FITTING - BONDED		7075-T7351 PLATE	
8	LINK - AFT ATTACHMENT		4330 MOD STEEL HT TR TO 200-240 KSI	
9	STABILIZER FITTING OUTBD		7075-T6 EXTRUSION, BAC1506-1786 AMS4928, TI-6AL-4V	 [A]

LIST OF MATERIALS FOR DETAIL I

Main Landing Gear Beam Identification
Figure 5

BOEING PROPRIETARY - Copyright © - Unpublished Work - See title page for details.

WING LEADING EDGE REPAIR

1. General

   A. Repairs which are applicable to components of these structures are indicated in the structural identification tabulations of 57-20-2.

SERVICE BULLETIN REPAIRS - WING TRAILING EDGE

The following service bulletins contain wing trailing edge repairs which are available for use where specific damage has been encountered. Usually, the service bulletin also covers preventive modification data which operators are encouraged to use to eliminate the need for repair.

DAMAGED AREA	CUM LINE NUMBER EFFECTIVITY [A]	SB NUMBER
WINGS - OUTBOARD LOWER FIXED TRAILING EDGE BEAM, RIBS, COVE, AND AILERON BALANCE BAY ACCESS PANELS BETWEEN (WBL) 417 AND 522	1 THRU 1579	737-57-1136
WINGS - MAIN LANDING GEAR TRUNNION SUPPORT BEAM AND BODY STATION 706 FRAME LUG INSPECTION AND MODIFICATION	1 THRU 310	737-57-1071

[A] FOR AIRPLANES ON WHICH PREVENTIVE MODIFICATION HAS NOT BEEN ACCOMPLISHED

WING TRAILING EDGE REPAIR

1. General

   A. For repair of glass fabric honeycomb panels of the wing trailing edge see 51-40-9, Fig. 1.

   B. For repair of components other than as above, see the structural identification tabulations of 57-20-2.

APPLICABILITY

THIS REPAIR IS APPLICABLE TO THE DAMAGED GROUND SPOILER FITTINGS LUGS LOCATED AT WBL 149.25 AND WBL 119.25. REFER TO DETAIL II.

REPAIR INSTRUCTIONS

1. Get access to the damaged area.
2. Cut and remove the damaged lug from the fitting.
3. Flap peen the area where the lug was removed. Refer to SOPM 20-10-03.
4. Make the repair parts. See Table I and Details III and IV.
5. Assemble repair parts and drill the fastener holes. Refer to Detail II.
6. Disassemble the repair parts.
7. Remove the nicks, scratches, gouges, burrs, and sharp edges from the repair parts and the repair surface of the fitting.
8. Apply a chemical conversion coating to the repair parts and to the bare surfaces of the fitting. Refer to SRM 51-10-2.
9. Install the Part 3 (Bushing) per SOPM 20-50-03. Install the bushing wet with BMS 10-11, Type I primer.
10. Apply two coats of BMS 10-11, Type I primer to the repair parts and to the bare surfaces of the repair surface of the fitting. Refer to SOPM 20-41-02.
11. Install the repair parts with BMS 5-95 sealant between the mating surfaces. Refer to SRM 51-20-04.
12. Install the fasteners wet with BMS 5-95 sealant.
13. Apply one coat of BMS 10-60, Type I enamel.
14. Apply a layer of BMS 3-23 corrosion inhibiting compound to the repair area. Refer to SRM 51-10-2.

NOTES

- ALL DIMENSIONS ARE IN INCHES, UNLESS GIVEN DIFFERENTLY.
- WHEN YOU USE THIS REPAIR, REFER TO:
  - SOPM 20-10-03 FOR SHOT PEENING
  - SOPM 20-41-02 FOR APPLICATION OF FINISHES
  - SOPM 20-50-03 FOR INSTALLATION OF BUSHINGS
  - SRM 51-10-1 FOR INVESTIGATION AND CLEANUP OF DAMAGE
  - SRM 51-10-2 FOR PROTECTIVE TREATMENT OF METALLIC AND NONMETALLIC MATERIALS
  - SRM 51-20-4 FOR REPAIR SEALING
  - SRM 51-30 FOR FASTENER CODE, INSTALLATION AND REMOVAL, HOLE SIZES AND EDGE MARGINS.

FASTENER SYMBOLS

⊕ REPAIR FASTENER LOCATION. INSTALL A BACB30MY5() HEX DRIVE BOLT WITH A BACC30M5 COLLAR.

REPAIR MATERIAL			
PART		QTY	MATERIAL
1	BRACKET	1	0.080 TYPE 301 CRES 1/2 HARD
2	RADIUS FILLER	1	0.080 TYPE 301 CRES 1/2 HARD
3	BUSHING	1	BACB28X4B07

TABLE I

Ground Spoiler Fitting Assembly Lug Repair
Figure 1 (Sheet 1)

BOEING PROPRIETARY - Copyright © - Unpublished Work - See title page for details.

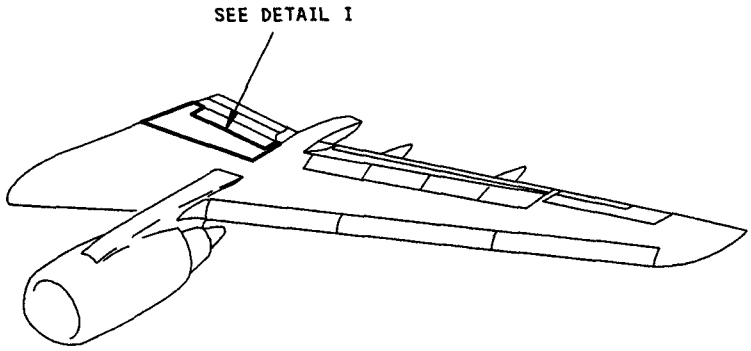

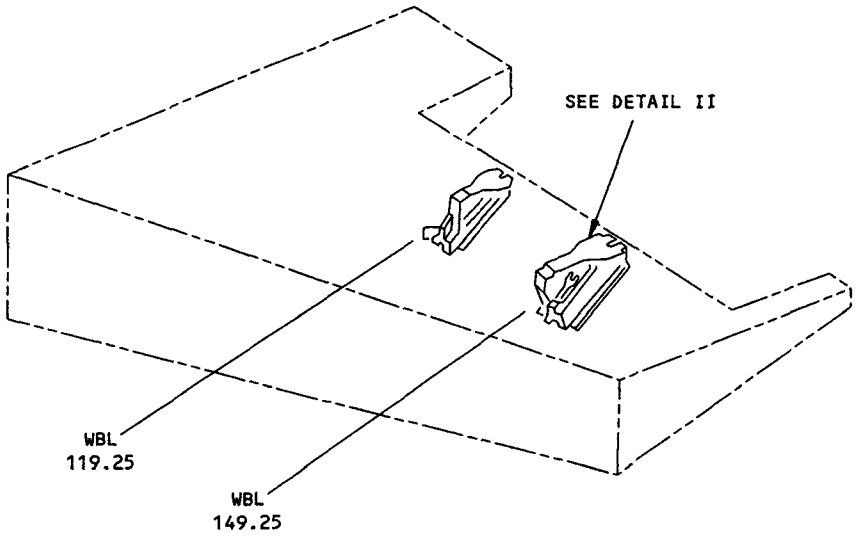

DETAIL I

Ground Spoiler Fitting Assembly Lug Repair
Figure 1 (Sheet 2)

BOEING PROPRIETARY - Copyright © - Unpublished Work - See title page for details.

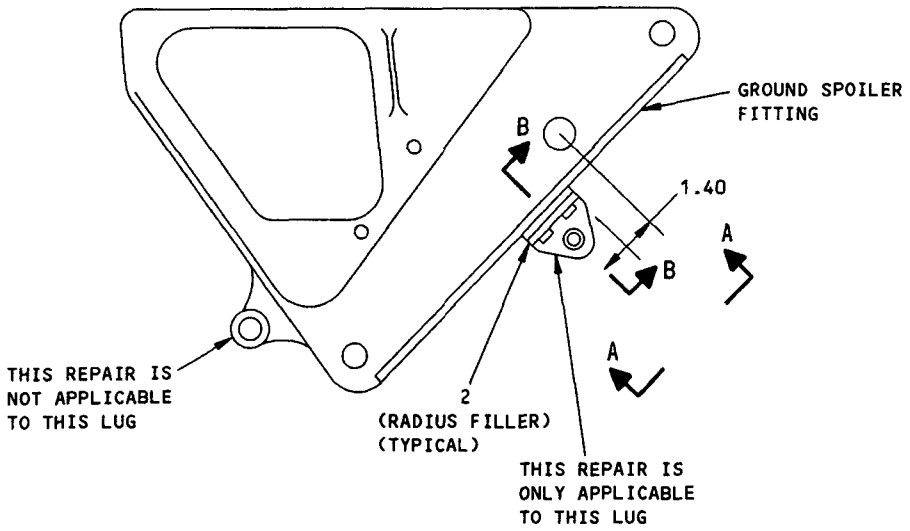

DETAIL II

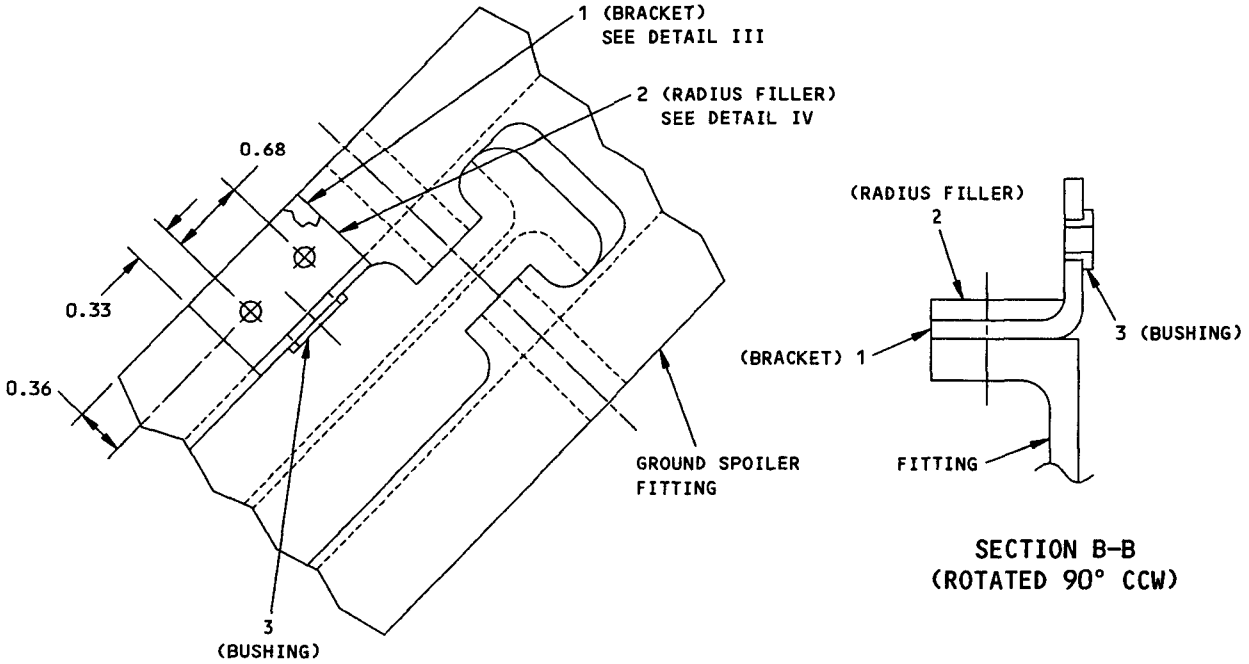

SECTION B-B
(ROTATED 90° CCW)

WBL 149.25 IS SHOWN, WBL 119.25 IS SIMILAR

VIEW A-A

Ground Spoiler Fitting Assembly Lug Repair
Figure 1 (Sheet 3)

BOEING PROPRIETARY - Copyright © - Unpublished Work - See title page for details.

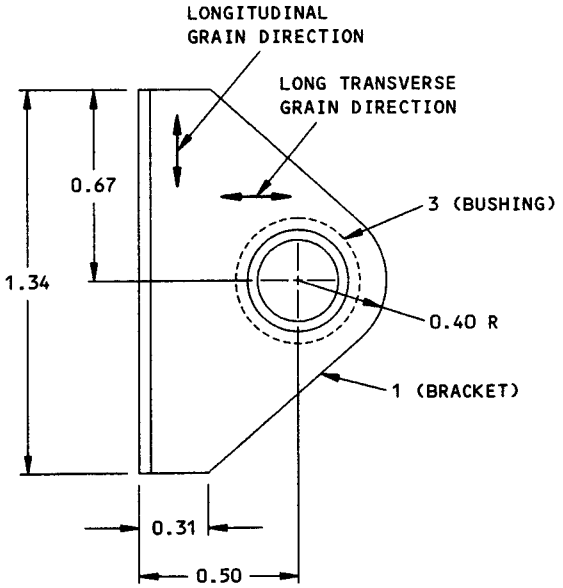

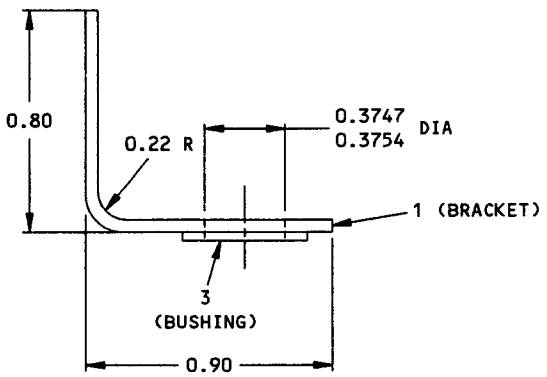

DETAIL III

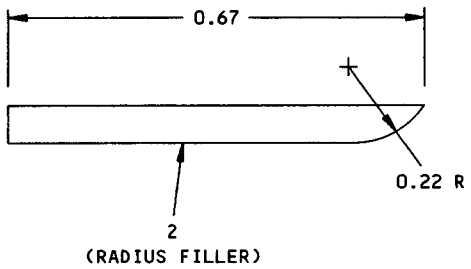

DETAIL IV

Ground Spoiler Fitting Assembly Lug Repair
Figure 1 (Sheet 4)

BOEING PROPRIETARY - Copyright © - Unpublished Work - See title page for details.

APPLICABILITY

THIS REPAIR IS APPLICABLE TO THE DAMAGE ON THE AFT OUTBOARD CORNER OF THE HINGE FITTING.

REPAIR INSTRUCTIONS

1. Get access to the damaged area.
2. Cut and remove the damage on the hinge fitting tab corner. Make the cut radius a minimum of 0.50 inch. Make sure the edges of the cut have a surface smoothness of 125 microinches Ra or better. See Detail III.
3. Do a penetrant inspection of the cut edges of the hinge fitting tab corner to make sure all of the damage is removed. Refer to SOPM 20-20-02.
4. Make the repair parts. See Table I. See Details II and III.
5. Temporarily assemble the repair parts and drill the fastener holes. Keep a 2D minimum edge margin and keep a fastener spacing of 4D to 6D between fasteners common to the vertical flange of the Part 2 (Angle). See Details II and IV.
6. Disassemble the repair parts.
7. Remove the nicks, scratches, gouges, burrs, and sharp edges from the repair parts and the cut edge of the hinge fitting.
8. Apply a cadmium plate finish to the Part 2 (Angle). Refer to SOPM 20-42-01.
9. Apply a chemical conversion coating to the other repair parts and the bare surfaces of the hinge fitting. Refer to SRM 51-10-2.
10. Apply one layer of BMS 10-11, Type I primer to the repair parts and to the bare surfaces of the hinge fitting. Refer to SOPM 20-41-02.
11. Install the repair parts with BMS 5-95 sealant to the mating surfaces. Fill all gaps with BMS 5-95 sealant. Refer to SRM 51-20-4.
12. Install the fasteners. Fasteners that are not made of aluminum must be installed wet with BMS 5-95 sealant.
13. Keep the pull-up limit to a maximum of 0.005 inch. If shims are necessary, refer to SRM 51-20-1.
14. Apply a finish to the repair area. Refer to AMM 51-21.

NOTES

- D = FASTENER DIAMETER
- KEEP A MINIMUM EDGE MARGIN OF 2D
- ALL DIMENSIONS ARE GIVEN IN INCHES UNLESS SPECIFIED OTHERWISE
- USE SHIMS, FILLERS OR TAPERED FILLERS SO THAT THE GAPS BETWEEN THE PARTS ARE NOT MORE THAN 0.005 INCH BEFORE FASTENER INSTALLATION.
- WHEN YOU USE THIS REPAIR REFER TO:
  - AMM 51-21 FOR INTERIOR AND EXTERIOR FINISHES
  - SOPM 20-20-02 FOR PENETRANT INSPECTION PROCEDURES
  - SOPM 20-41-02 FOR APPLICATION OF FINISHES
  - SOPM 20-42-01 FOR CADMIUM PLATING
  - SRM 51-10-1 FOR INVESTIGATION AND CLEANUP OF DAMAGE
  - SRM 51-10-2 FOR PROTECTIVE TREATMENT OF METAL
  - SRM 51-20-4 FOR REPAIR SEALING
  - SRM 51-20-1 FOR SHEET METAL AND FLAT PATTERN DATA, RULES OF SHIMMING
  - SRM 51-30 FOR FASTENER CODE, INSTALLATION AND REMOVAL, SUBSTITUTION, HOLE SIZES, AND EDGE MARGINS.

[A] INSTALL THE NAS1398C6 RIVET SO THAT THE TAIL BUTTON OF THE RIVET SEATS FLAT ON THE HINGE INNER WALL.

FASTENER SYMBOLS

- INITIAL FASTENER LOCATION. INSTALL A BACB30LU3 (LONGER GRIP LENGTH) FLUSH HEAD BOLT.
- REPAIR FASTENER LOCATION. INSTALL A BACR15CE6D() RIVET.
- REPAIR FASTENER LOCATION. INSTALL A NAS1398M6() BLIND RIVET.
- REPAIR FASTENER LOCATION. INSTALL A BACR15CE3D() COIUNTERSINK RIVET THRU PARTS 1 AND 2.

Wing Trailing Edge - Aileron Hinge Fitting Crack Repair
Figure 2 (Sheet 1)

BOEING PROPRIETARY - Copyright © - Unpublished Work - See title page for details.

REPAIR MATERIAL			
PART		QTY	MATERIAL
1	FILLER	1	7075-T6 CLAD, SAME THICKNESS AS THE INITIAL FLANGE
2	ANGLE	1	0.050 INCH 15-5 PH CRES, HT TR 180-200 KSI
3	TAPERED FILLER	1	7075-T6 CLAD, THICKNESS AS NECESSARY TO KEEP A MAXIMUM PULL-UP LIMIT OF 0.005 INCH

TABLE I

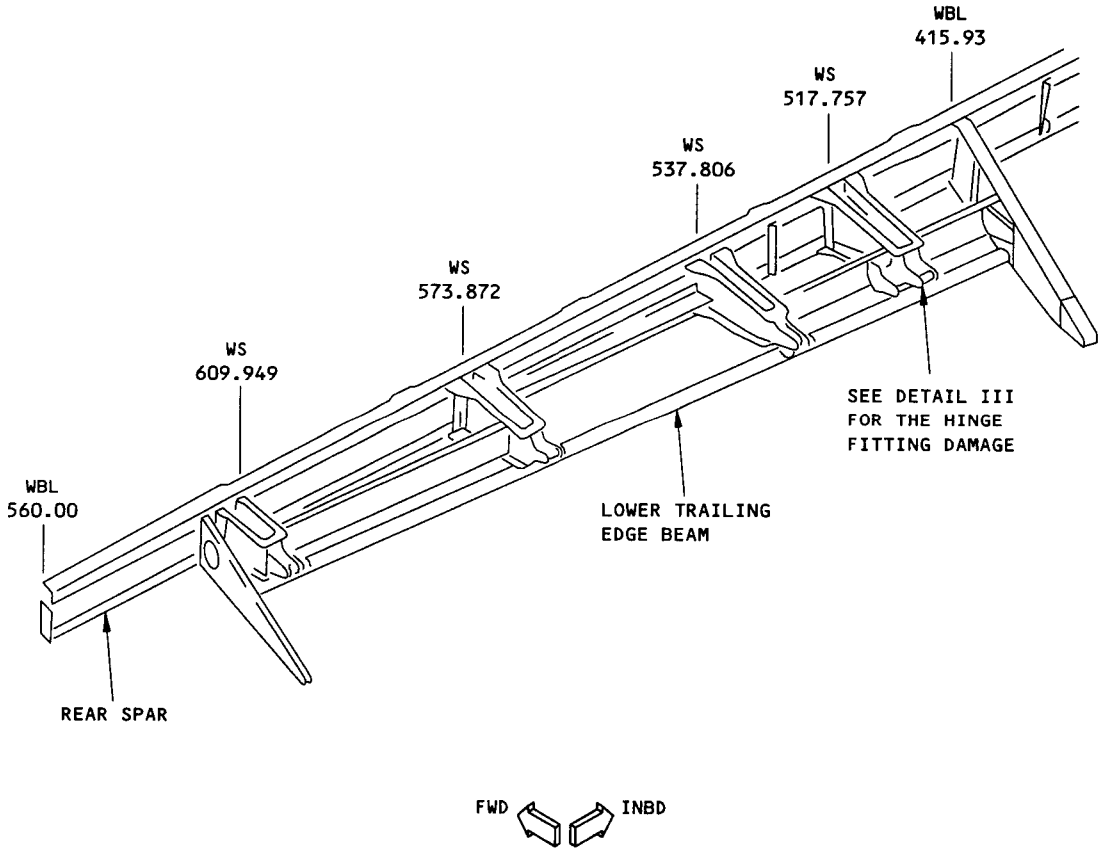

LEFT SIDE IS SHOWN, RIGHT SIDE IS OPPOSITE

VIEW LOOKING FORWARD

WING FIXED TRAILING EDGE
DETAIL I

Wing Trailing Edge - Aileron Hinge Fitting Crack Repair
Figure 2 (Sheet 2)

BOEING PROPRIETARY - Copyright © - Unpublished Work - See title page for details.

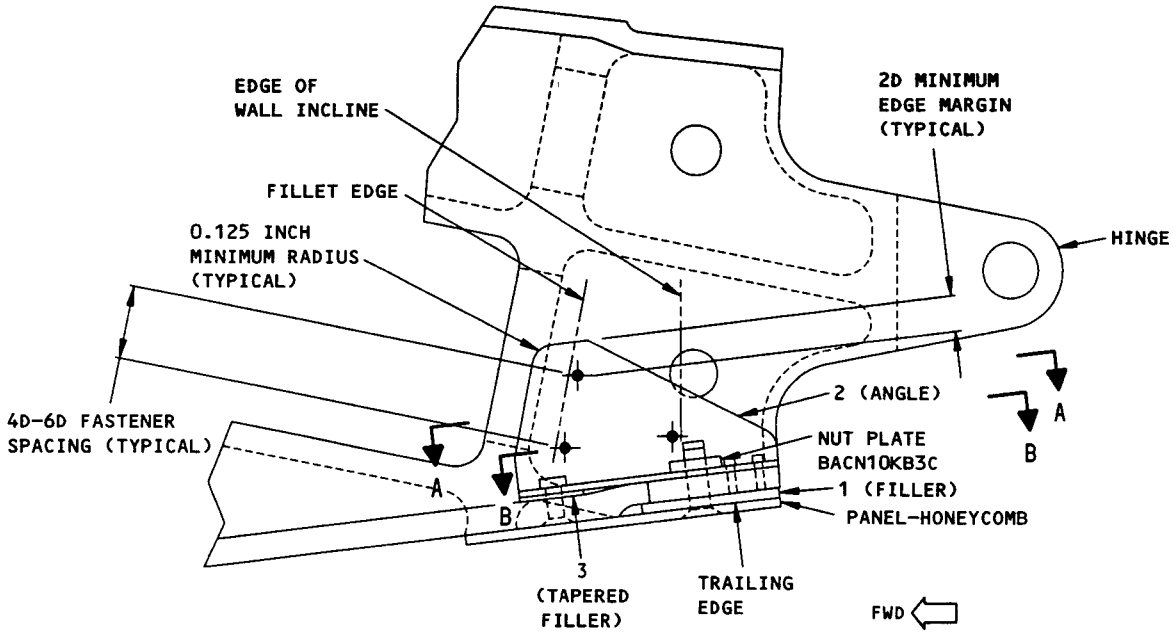

LEFT SIDE IS SHOWN, RIGHT SIDE IS OPPOSITE

VIEW LOOKING FORWARD

REPAIR OF HINGE FITTING
DETAIL II

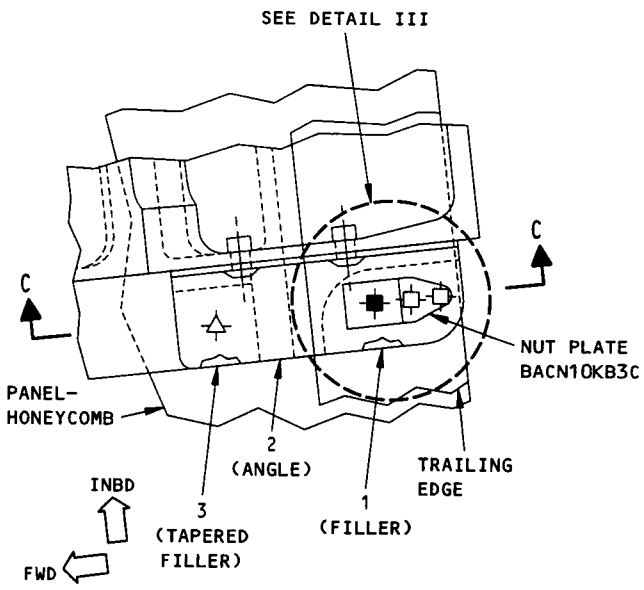

VIEW A-A

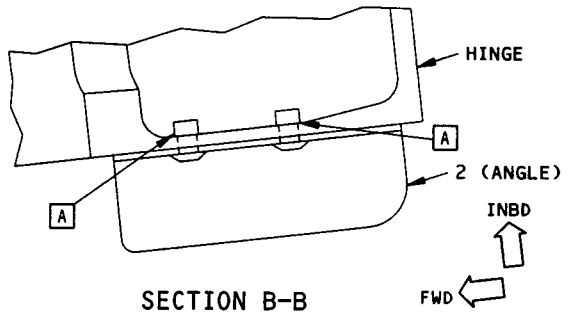

SECTION B-B

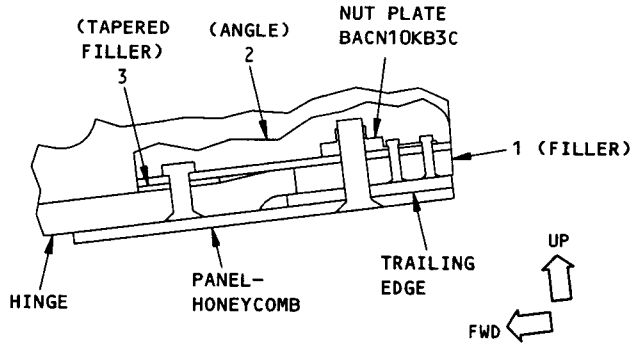

SECTION C-C

Wing Trailing Edge - Aileron Hinge Fitting Crack Repair
Figure 2 (Sheet 3)

BOEING PROPRIETARY - Copyright © - Unpublished Work - See title page for details.

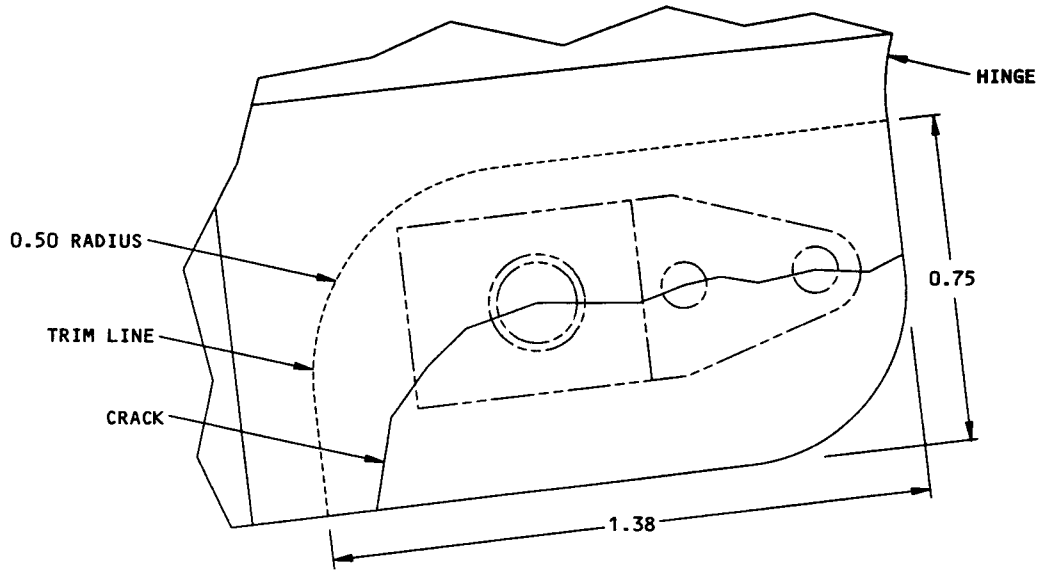

LEFT SIDE IS SHOWN, RIGHT SIDE IS OPPOSITE

TRIM LINE THROUGH HINGE FITTING
DETAIL III

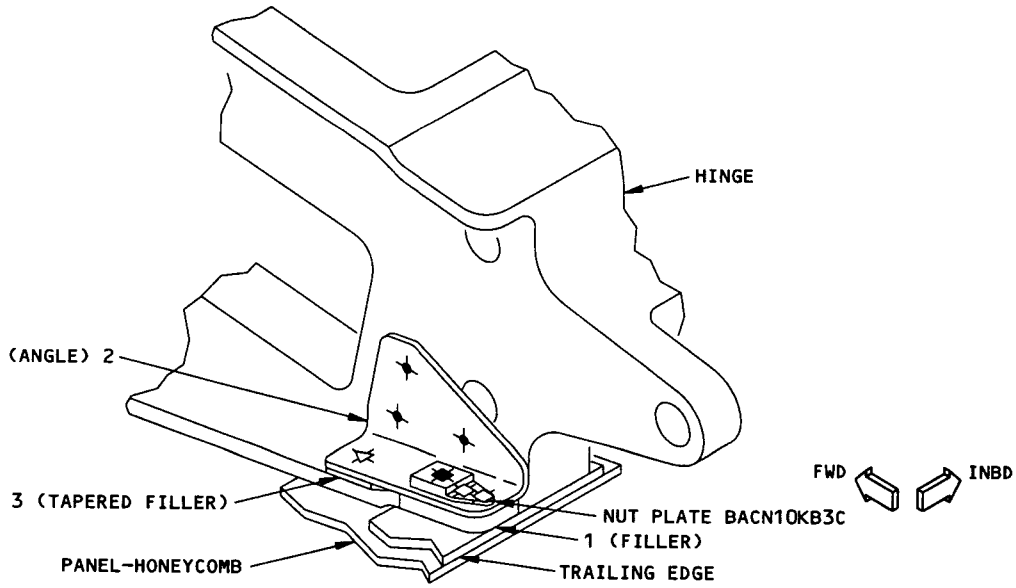

LEFT SIDE IS SHOWN, RIGHT SIDE IS OPPOSITE

INSTALLATION VIEW
DETAIL IV

Wing Trailing Edge - Aileron Hinge Fitting Crack Repair
Figure 2 (Sheet 4)

BOEING PROPRIETARY - Copyright © - Unpublished Work - See title page for details.

APPLICABILITY

THIS REPAIR IS APPLICABLE TO THE WING TIP AFT OF THE REAR SPAR.

REPAIR INSTRUCTIONS

1. Stop drill the cracks or cutout the damaged area.
2. Make the part 1 doubler to match the outside contour of the damaged area.
3. Remove all the sharp edges and burrs from the part 1 doubler and the damage rework area.
4. Apply a chemical conversion coating to the part 1 doubler and the bare surfaces of the initial parts. Refer to SRM 51-10-2.
5. Apply one coat of BMS 10-79, Type II or Type III primer to repair parts and the cut edges of the initial parts. Refer to SOPM 20-44-04.
6. Install the repair part 1 with BMS 5-95 sealant between the mating surfaces. Refer to SRM 51-20-4.
7. Install the fasteners wet with BMS 5-95 sealant. Refer to SRM 51-20-4.
8. Apply BMS 5-95 for aero smoothness.
9. Apply the finish as given in AMM 51-21.

NOTES

- THIS REPAIR WILL NOT HAVE AN EFFECT ON A STRUCTURALLY SIGNIFICANT ITEM (SSI) GIVEN IN SRM 51-00-4, FIG. 3. THUS, NO CHANGE TO THE SUPPLEMENTAL STRUCTURAL INSPECTION DOCUMENT (SSID) INSPECTION PROGRAM IS NECESSARY.
- WHEN YOU USE THIS REPAIR, REFER TO:
  - AMM 51-21 FOR INTERIOR AND EXTERIOR FINISHES
  - SOPM 20-44-04 FOR APPLICATION OF CORROSION RESISTANT PRIMER
  - SRM 51-10-1 FOR INVESTIGATION AND CLEANUP OF DAMAGE
  - SRM 51-10-2 FOR PROTECTIVE TREATMENT OF METALS
  - SRM 51-20-4 FOR SEALING OF REPAIRS
  - SRM 51-30 FOR FASTENER CODE, REMOVAL, INSTALLATION, HOLE SIZES, EDGE MARGINS AND SUBSTITUTION
  - SRM 51-70 FOR AERODYNAMIC SMOOTHNESS REQUIREMENTS.

FASTENER SYMBOLS

REPAIR FASTENER LOCATION. INSTALL A BACR15FP5E OR NAS1739E5 BLIND RIVET.

REPAIR MATERIAL			
PART		QTY	MATERIAL
1	DOUBLER	1	0.063 INCH THICK 2024-0 HT-T42

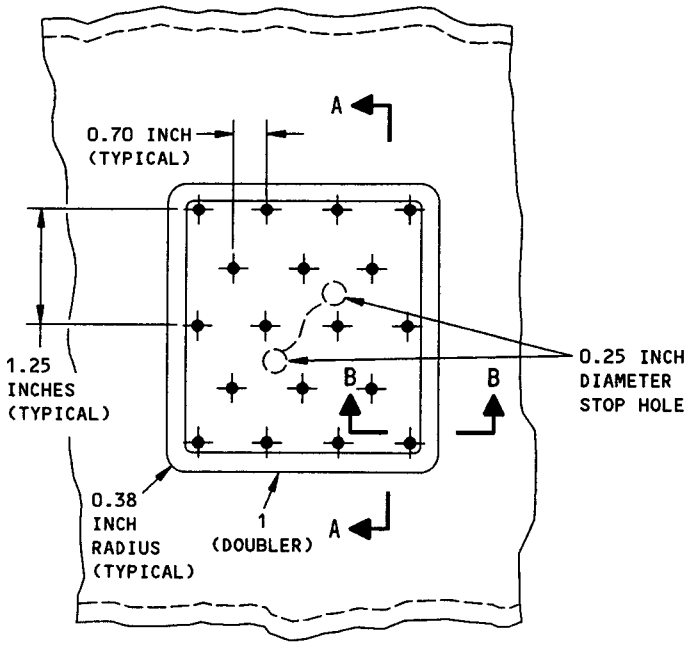

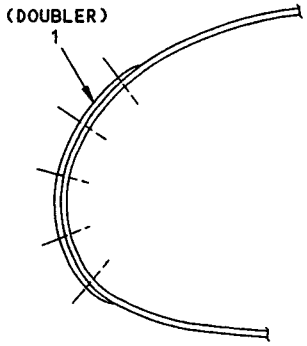

SECTION A-A

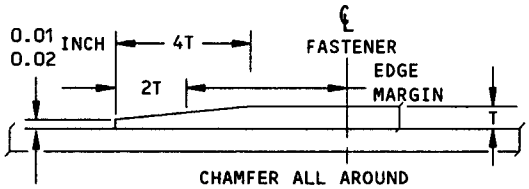

SECTION B-B

Wing Tip Skin - External Repair
Figure 1

BOEING PROPRIETARY - Copyright © - Unpublished Work - See title page for details.

APPLICABILITY
THE REPAIR SHOWN IN THIS FIGURE IS APPLICABLE TO THE WING TIP AFT OF THE REAR SPAR.

REPAIR INSTRUCTIONS

1. Remove the wing tip cap.
2. Cut out damaged area.
3. Make the repair parts.
   a. Make the part 1 filler to match the outside contour of the damage area.
   b. Make the part 2 doubler to match the inside contour of the damage area.
4. Assemble the repair parts. See Detail I.
5. Drill fastener holes.
6. Disassemble the repair parts.
7. Remove all nicks, scratches, burrs, and sharp edges from the initial and repair parts.
8. Apply a chemical conversion coating to the repair parts and the bare surfaces of the initial parts. Refer to SRM 51-10-2.
9. Apply one coat of BMS 10-79, Type II or Type III primer to repair parts and the cut edges of the initial parts. Refer to SOPM 20-44-4.
10. Install the repair parts with BMS 5-95 sealant between the faying surfaces. Refer to SRM 57-20-4.
11. Install the fasteners.
12. Apply BMS 5-95 sealant to the aerodynamic smoothness critical areas as given in SRM 51-70.

    NOTE: Wing tip aft of rear spar is in aero non-critical area. Refer to SRM 51-70, Fig. 1.
13. Apply the finish as given in AMM 51-21.
14. Replace the wing tip cap.

NOTES

- THIS REPAIR WILL NOT HAVE AN EFFECT ON A STRUCTURALLY SIGNIFICANT ITEM (SSI) GIVEN IN SRM 51-00-4, FIG. 3. THUS, NO CHANGE TO THE SUPPLEMENTAL STRUCTURAL INSPECTION DOCUMENT (SSID) INSPECTION PROGRAM IS NECESSARY.
- WHEN YOU USE THIS REPAIR, REFER TO:
  - AMM 51-21 FOR INTERIOR AND EXTERIOR FINISHES
  - SOPM 20-44-04 FOR APPLICATION OF CORROSION RESISTANT PRIMER
  - SRM 51-10-1 FOR INVESTIGATION AND CLEANUP OF DAMAGE
  - SRM 51-10-2 FOR PROTECTIVE TREATMENT OF METALS
  - SRM 51-20-4 FOR SEALING OF REPAIRS
  - SRM 51-30 FOR FASTENER CODE, REMOVAL, INSTALLATION, HOLE SIZES, EDGE MARGINS AND SUBSTITUTION

FASTENER SYMBOLS

REPAIR FASTENER LOCATION.
INSTALL A BACR15CE5D RIVET.

REPAIR MATERIAL			
PART		QTY	MATERIAL
1	FILLER	1	0.050 INCH THICK 2024-0 HT -T42
2	DOUBLER	1	0.071 INCH THICK 2024-0 HT -T42

TABLE 1

Wing Tip Skin - Flush Repair
Figure 2 (Sheet 1)

BOEING PROPRIETARY - Copyright © - Unpublished Work - See title page for details.

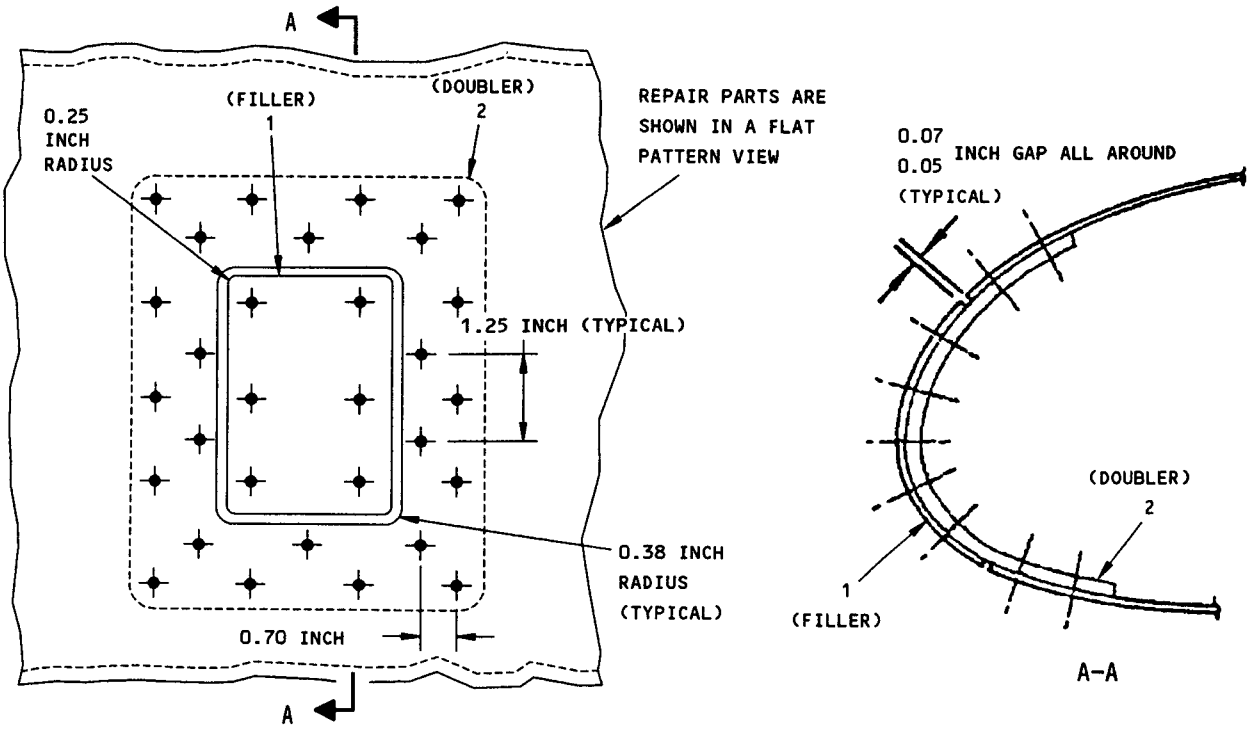

Wing Tip Skin - Flush Repair
Figure 2 (Sheet 2)

BOEING PROPRIETARY - Copyright © - Unpublished Work - See title page for details.

APPLICABILITY
THIS REPAIR IS APPLICABLE TO CRACK DAMAGE THAT OCCURS TO THE BOOST PUMP HOUSING.

REPAIR INSTRUCTIONS

WARNING: MAKE SURE THAT YOU FOLLOW THE SAFETY PROCEDURES GIVEN IN SRM 51-20-4, PAR. 9. IF YOU DO NOT, THE RESULT CAN BE INJURY TO PERSONNEL.

1. Clean up the damage area. Drill a 0.25 inch diameter (minimum) stop hole at the ends of all cracks and tears.
2. Do a High Frequency Eddy Current (HFEC) inspection to make sure that all damage has been removed. Refer to NDT Part 6, 51-00-00 for the HFEC inspection procedure.
3. Put the indented or projected skin back to the initial contour.
4. Remove all nicks, burrs, scratches and sharp edges from the initial and repair parts.
5. Remove the initial sealant in the damaged and adjacent areas as given in SRM 51-20-4, par. 9.
6. Make the part 1 doubler. Make it to match the initial contour of the damage area and drill the fastener holes.
7. Put the part 1 doubler in position and drill the necessary fastener holes in the structure.
8. Apply a chemical conversion coating to the part 1 doubler and the bare surfaces of the initial part. Refer to SRM 51-10-2.
9. Apply BMS 10-20, Type II protective coating to the repair parts and the bare surfaces of the initial parts.
10. Install the part 1 doubler with BMS 5-26, Type II sealant between the mating surfaces.
11. Install the fasteners wet with BMS 5-26, Type II sealant.
12. Apply a fillet seal with BMS 5-26, Type II sealant around the part 1 doubler. Apply sealant to the fasteners.

NOTES

- THIS REPAIR WILL NOT HAVE AN EFFECT ON A STRUCTURALLY SIGNIFICANT ITEM (SSI) GIVEN IN SRM 51-00-4, FIG. 3. THUS, NO CHANGE TO THE SUPPLEMENTAL STRUCTURAL INSPECTION DOCUMENT (SSID) INSPECTION PROGRAM IS NECESSARY.
- WHEN YOU DO THIS REPAIR, REFER TO:
  - SRM 51-10-2 FOR THE PROTECTIVE TREATMENT OF METAL
  - SRM 51-20-4 FOR REPAIR SEALING
  - SRM 51-30 FOR FASTENER CODES, INSTALLATION AND REMOVAL PROCEDURES, HOLE SIZES, AND EDGE MARGIN.

[A] 0.70 TO 0.80 INCH SPACING.

FASTENER SYMBOLS

REPAIR FASTENER LOCATION. INSTALL A MS20470D5 RIVET.

REPAIR MATERIAL			
PART		QTY	MATERIAL
[1]	DOUBLER	1	0.050 INCH THICK CLAD 2024-T4

Fuel Boost Pump Housing - External Repair
Figure 1 (Sheet 1)

BOEING PROPRIETARY - Copyright © - Unpublished Work - See title page for details.

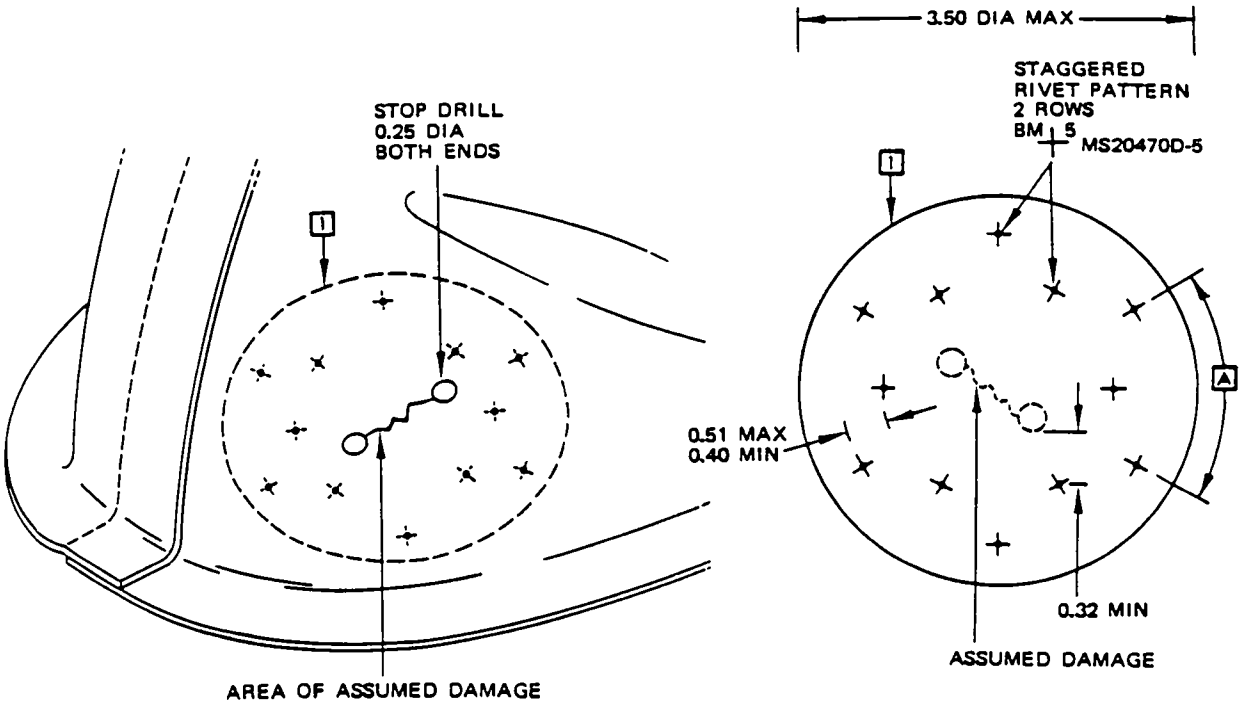

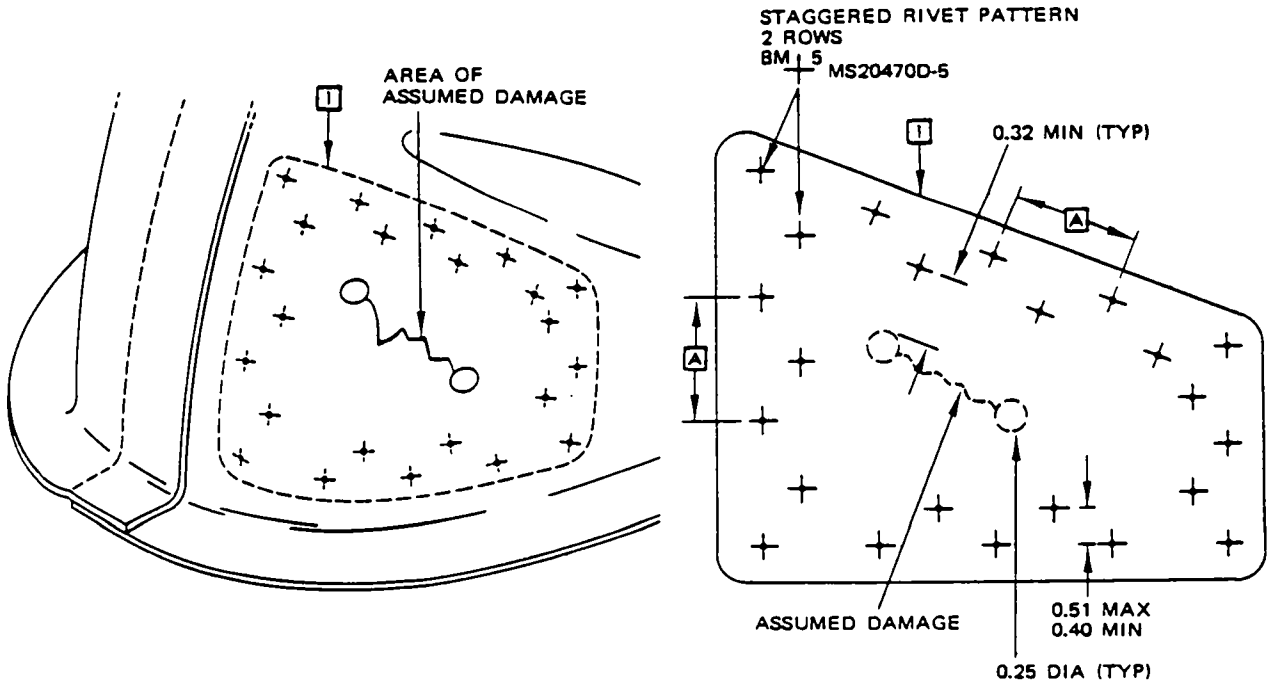

SMALL CRACK REPAIR

APPLICABILITY

THIS REPAIR IS APPLICABLE TO CRACK DAMAGE THAT OCCURS IN THE STIFFENER BEADS OF THE BOOST PUMP HOUSING.

REPAIR INSTRUCTIONS

WARNING: MAKE SURE THAT YOU FOLLOW THE SAFETY PROCEDURES GIVEN IN SRM 51-20-4. IF YOU DO NOT, THE RESULT CAN BE INJURY TO PERSONNEL.

1. Clean up the damage area. Cut out the cracked bead along the mold line and trim all the edges.
2. Do a High Frequency Eddy Current (HFEC) inspection to make sure that all damage has been removed. Refer to NDT Part 6, 51-00-00 for the HFEC inspection procedure.
3. Make the part 1 plate with a stiffening bead. Refer to A-A and B-B for the bead contour.

   NOTE: The part 1 plate should be extended at the lower end of the upper bead to permit the use of the initial rivets in the housing/pump support plate joint.
4. Put the part 1 plate into position.
5. Drill the fastener holes.
6. Remove the part 1 plate.
7. Remove all nicks, scratches, burrs, and sharp edges from the initial and repair parts.
8. Apply a chemical conversion coating to the part 1 plate and the bare surfaces of the initial parts. Refer to SRM 51-10-2.
9. Apply BMS 10-20, Type II protective coating to the part 1 plate and the bare surfaces of the initial parts.
10. Install the part 1 plate with BMS 5-26, Type II sealant between the mating surfaces.
11. Install the fasteners wet with BMS 5-26, Type II sealant.
12. Apply a fillet seal with BMS 5-26, Type II sealant around the part 1 doubler. Apply sealant to the fasteners.

NOTES

- THIS REPAIR WILL NOT HAVE AN EFFECT ON A STRUCTURALLY SIGNIFICANT ITEM (SSI) GIVEN IN SRM 51-00-4, FIG. 3. THUS, NO CHANGE TO THE SUPPLEMENTAL STRUCTURAL INSPECTION DOCUMENT (SSID) INSPECTION PROGRAM IS NECESSARY.
- WHEN YOU DO THIS REPAIR, REFER TO:
  - SRM 51-10-2 FOR THE PROTECTIVE TREATMENT OF METAL
  - SRM 51-20-4 FOR REPAIR SEALING
  - SRM 51-30 FOR FASTENER CODES, INSTALLATION AND REMOVAL PROCEDURES, HOLE SIZES, AND EDGE MARGIN.

[A] 0.70 TO 0.80 INCH SPACING

FASTENER SYMBOLS

REPAIR FASTENER LOCATION. INSTALL A BACR15BB5B OR MS20470B5 RIVET.

INITIAL FASTENER LOCATION. INSTALL THE SAME SIZE AND TYPE OF FASTENER AS THE INITIAL FASTENER.

REPAIR MATERIAL			
PART		QTY	MATERIAL
[1]	PLATE	1	0.050 INCH THICK CLAD 2024-T4

Fuel Boost Pump Housing - Repair and Sealing
Figure 2 (Sheet 1)

BOEING PROPRIETARY - Copyright © - Unpublished Work - See title page for details.

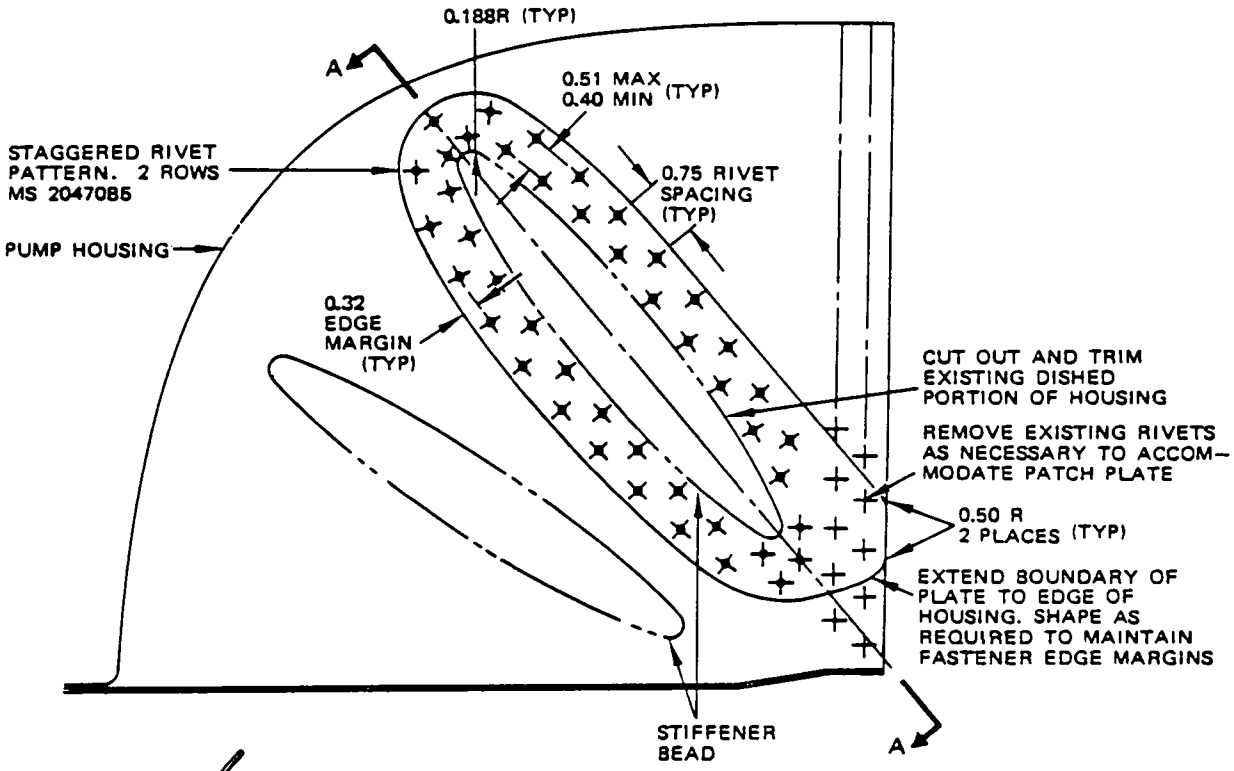

REPAIR AT CRACKED BEAD

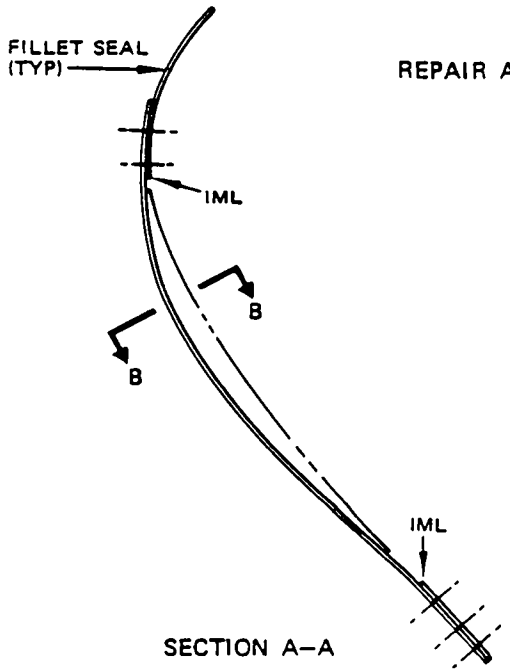

SECTION A–A

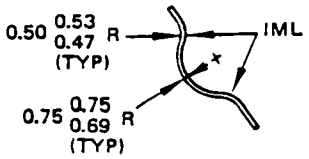

SECTION B–B

APPLICABILITY

THESE ALLOWABLE DAMAGE LIMITS ARE APPLICABLE TO THE UPPER AND LOWER SKINS OF THE WING. ALL WING SKIN DAMAGE IN A ZONE MUST NOT BE MORE THAN THE LIMITS GIVEN IN TABLES I AND II. FIGURE 1A DAMAGE LIMITS IS AN ALTERNATIVE METHOD TO FIGURE 1B LIMITS. DO NOT USE FIGURE 1B LIMITS TOGETHER WITH FIGURE 1A LIMITS.

THESE ALLOWABLE DAMAGE LIMITS ARE NOT APPLICABLE IN THESE AREAS:

- EXTERNAL OR INTERNAL SKIN SURFACES THAT TOUCH OTHER STRUCTURES. THESE STRUCTURES INCLUDE STIFFENERS, SPARS, RIBS, FITTINGS AND ALL OTHER STRUCTURES.
- A ZONE THAT HAS DAMAGE TO ONE OR MORE OF ITS UPPER OR LOWER STIFFENERS OR SPAR.
- THE LOWER SKIN BETWEEN STIFFENER 6 AND 8 AS SPECIFIED BY THESE LIMITS:
  - FROM A LINE 2.0 INCHES FORWARD OF THE FORWARD ROW OF THE FASTENERS ALONG STIFFENER 6.
  - TO A LINE 2.0 INCHES AFT OF THE AFT ROW OF THE FASTENERS ALONG STIFFENER 8.
- AN AREA THAT IS 1.50 INCHES OR LESS FROM A CHORDWISE ROW OF FASTENERS.
- AN AREA THAT IS FORWARD OF A LINE 1.50 INCHES AFT OF THE AFT ROW OF FASTENERS THAT ATTACH THE SKIN TO THE FRONT SPAR.
- AN AREA THAT IS AFT OF A LINE 1.50 INCHES FORWARD OF THE FORWARD ROW OF FASTENERS THAT ATTACH THE SKIN TO THE REAR SPAR.
- AN AREA THAT IS 1.50 INCHES OR LESS FROM ANY FASTENERS IN SPANWISE SKIN SPLICES.

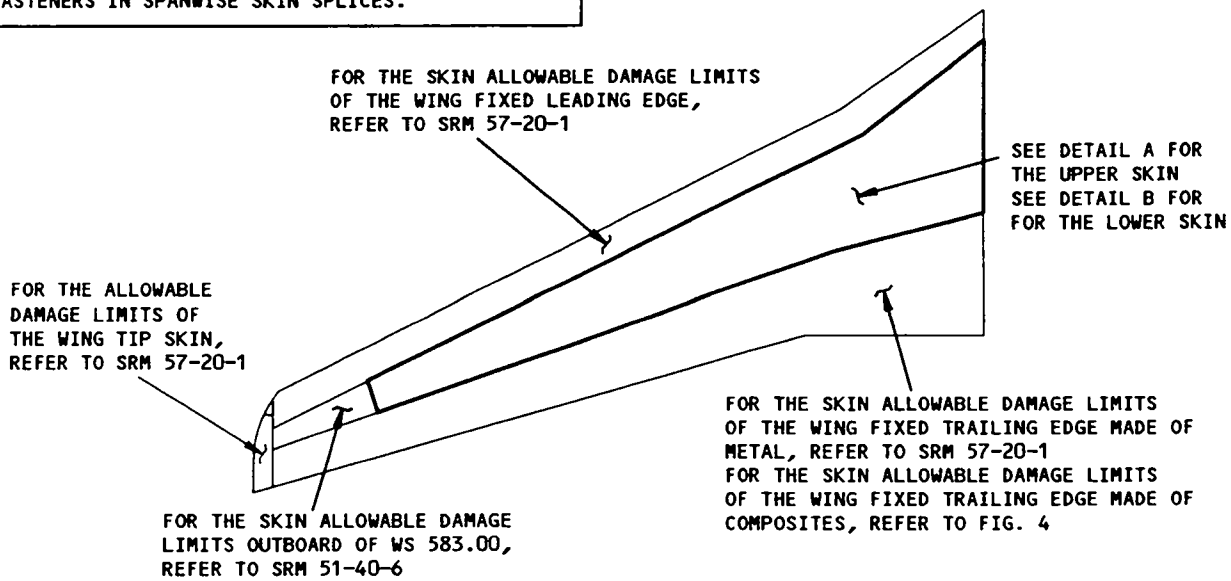

Wing Inspar Skin Allowable Damage (Inboard of WS 583.00)
(Alternate Method)
Figure 1A (Sheet 1)

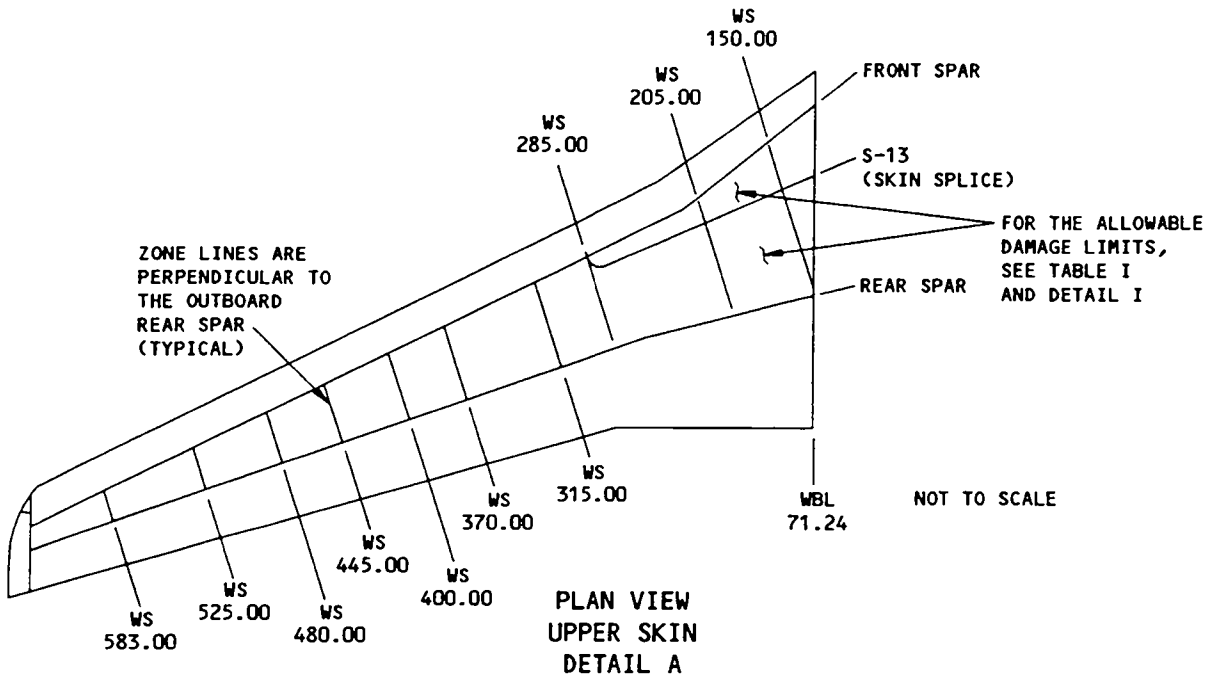

PLAN VIEW
UPPER SKIN
DETAIL A

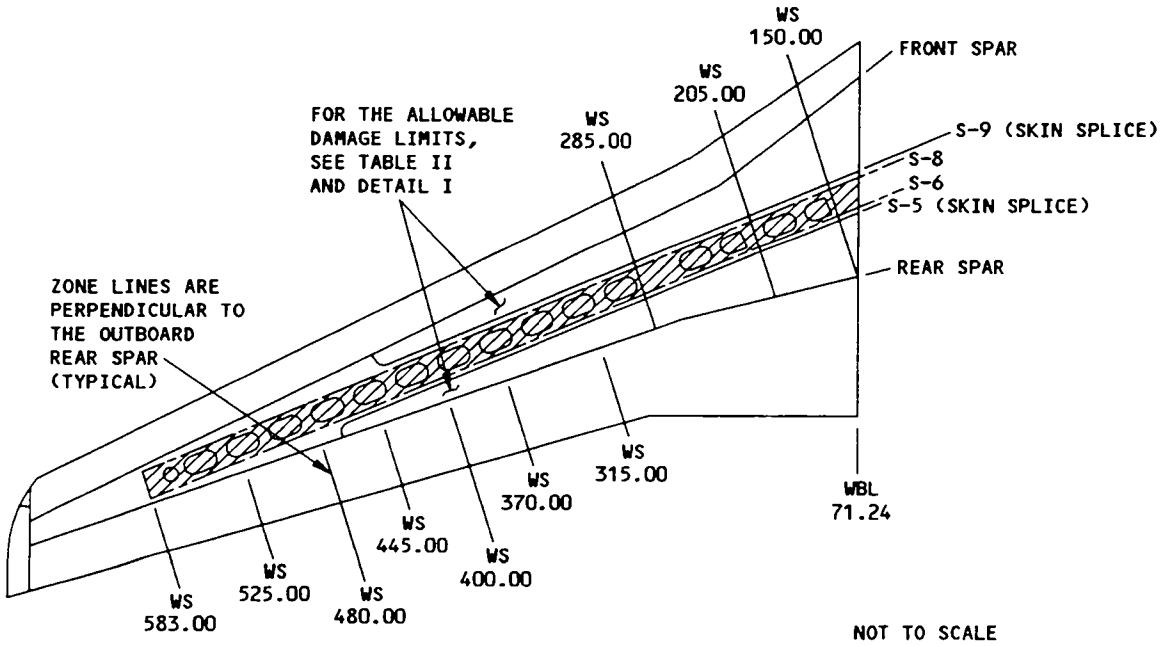

CRITICAL AREA. TELL THE BOEING COMPANY IF YOU HAVE DAMAGE IN THIS AREA. THE BOEING COMPANY WILL GIVE INSTRUCTIONS.

PLAN VIEW
LOWER SKIN
DETAIL B

Wing Inspar Skin Allowable Damage (Inboard of WS 583.00)
(Alternate Method)
Figure 1A (Sheet 2)

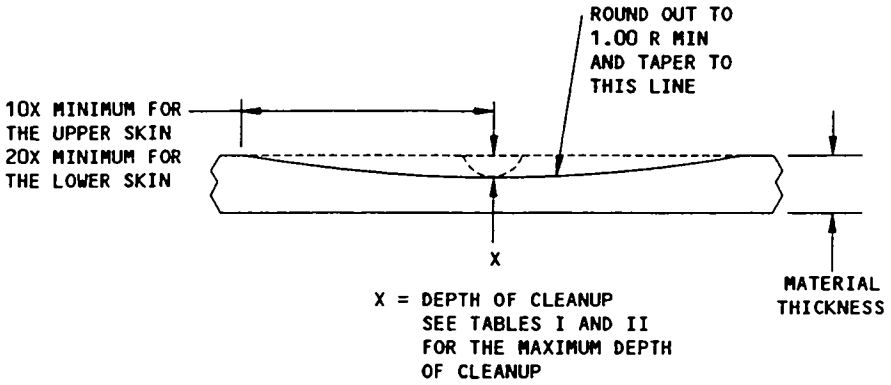

SECTION THROUGH CLEANED UP DAMAGE
DETAIL I

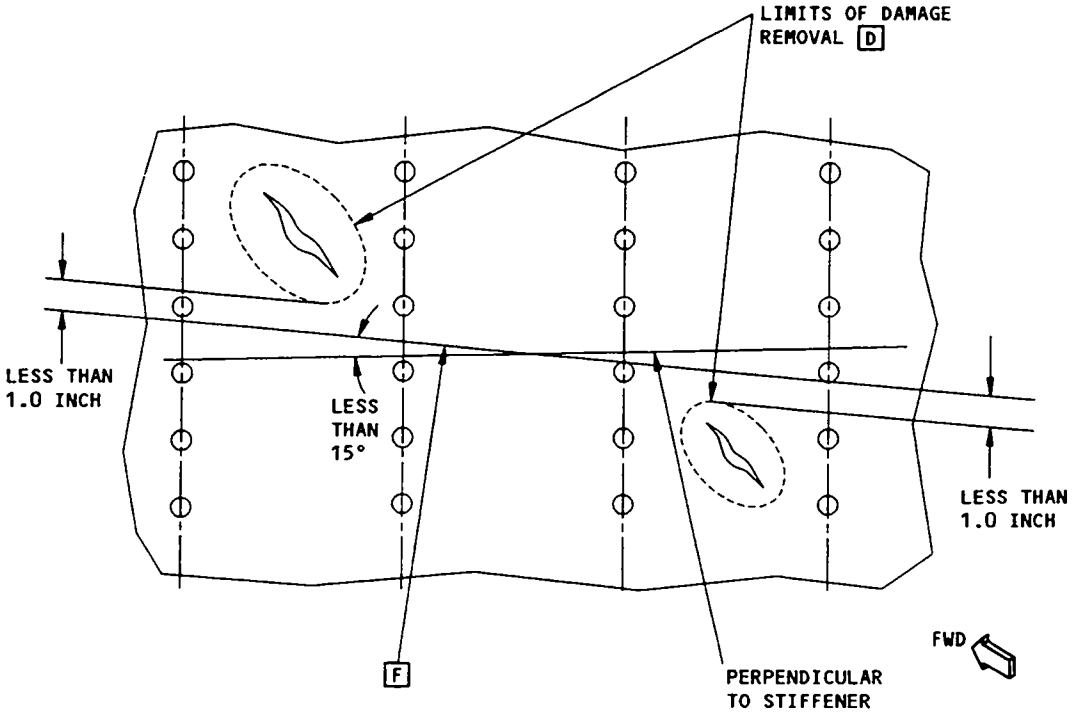

ADDITIVE DAMAGE
DETAIL II

Wing Inspar Skin Allowable Damage (Inboard of WS 583.00)
(Alternate Method)
Figure 1A (Sheet 3)

NOTES

- DAMAGE, SUCH AS BLENDOUTS, TRIMOUTS, OR DENTS:
  - THAT OCCUR TO A STRUCTURALLY SIGNIFICANT ITEM (SSI) GIVEN IN SRM 51-00-4, FIG. 3 AND,
  - THAT ARE WITHIN THE ALLOWABLE DAMAGE LIMITS OF THE BOEING SRM,

  DO NOT HAVE AN EFFECT ON THE DAMAGE TOLERANCE PROPERTIES OF THE SSI. THEREFORE, EXISTING SUPPLEMENTAL STRUCTURAL INSPECTION DOCUMENT (SSID) INSPECTION PROGRAMS REMAIN EFFECTIVE.
- ALL DIMENSIONS ARE IN INCHES, UNLESS GIVEN DIFFERENTLY.
- FOR ALLOWABLE DAMAGE LIMITS FOR THE UPPER SKIN OF THE SPAR WING, REFER TO TABLE I.
- FOR ALLOWABLE DAMAGE LIMITS FOR THE LOWER SKIN OF THE INSPAR WING, REFER TO TABLE II.
- FOR REMOVAL OF DAMAGE AT A FASTENER, REFER TO FIG. 5.
- REFER TO NDT PART 6, 51-00-00 FOR HFEC INSPECTION PROCEDURE.
- REFER TO AMM 51-21 FOR THE REFINISH OF REWORKED SURFACES.
- REFER TO SOPM 20-20-02 FOR PENETRANT INSPECTION PROCEDURES.
- REFER TO SOPM 20-44-04 FOR THE APPLICATION OF CORROSION RESISTANT PRIMER.
- REFER TO SRM 51-70 FOR AERODYNAMIC SMOOTHNESS REQUIREMENTS.
- REFER TO SRM 51-10-1 FOR DAMAGE CLASSIFICATION.
- REFER TO SRM 51-10-2 FOR PROTECTIVE TREATMENT OF METALLIC MATERIALS.
- REFER TO SRM 51-20-4 FOR REPAIR SEALING.
- REFER TO SRM 51-10-8 FOR SHOT PEENING PROCEDURES.
- AFTER ALL DAMAGE CLEANUP:
  - MAKE THE ROUGHNESS OF THE BLENDOUT AREA 125 MICROINCHES Ra OR SMOOTHER
  - DO A 10X VISUAL OR PENETANT INSPECTION TO MAKE SURE THE DAMAGE IS REMOVED
  - SHOT PEEN THE DAMAGED AREA ON THE EXTERIOR SKIN SURFACE. ROTARY PEEN DAMAGE AREAS IN THE FUEL TANKS
  - APPLY ALODINE 600
  - APPLY BMS 10-79, TYPE III, PRIMER TO THE EXTERNAL SKIN SURFACE. APPLY BMS 10-20, TYPE II PRIMER TO THE INTERNAL SKIN SURFACE.
- TO RESTORE AN AERODYNAMIC SURFACE, DO AS FOLLOWS:
  - FILL THE AREAS WITH BMS 5-95 SEALANT. REFER TO SRM 51-20-4
  - LET THE SEALANT CURE
  - APPLY ONE MORE COAT OF BMS 10-79, TYPE III PRIMER OVER THE SEALANT. REFER TO SOPM 20-44-04

  UPPER SKIN. APPLY BMS 5-95, CLASS F SEALANT, PLUS BMS 10-60 PROTECTIVE ENAMEL TO THE LOWER SKIN.

[A] KEEP A RECORD OF THE CROSS-SECTIONAL AREA REMOVED FROM EXTERNAL AND INTERNAL SKIN SURFACES, STIFFENERS AND SPAR CHORDS. THIS WILL PREVENT ACCIDENTAL REMOVAL OF MORE MATERIAL THAN IS PERMITTED.

[B] FOR REMOVAL OF NICK, GOUGE, CORROSION, AND SCRATCH DAMAGE ON A SURFACE, SEE DETAIL I. IF THE DEPTH OF DAMAGE OR CROSS-SECTIONAL AREA LOSS IS MORE THAN SHOWN IN THE TABLES, DO AS FOLLOWS:
- DO NOT BLEND OUT THE DAMAGE AT 10X FOR THE UPPER SKIN OR 20X FOR THE LOWER SKIN
- REMOVE THE MINIMUM AMOUNT OF MATERIAL TO CLEAN UP THE DAMAGE
- GO TO THE BOEING COMPANY FOR INSTRUCTIONS.

[C] WHERE THE STIFFENER ADJACENT TO A SPAR FORMS A TAPERED PANEL WITH THE SPAR, THE ALLOWABLE DAMAGE LIMITATIONS APPLY TO THE AREA BETWEEN THE SPAR AND THE SECOND STIFFENER, UNLESS THE DISTANCE BETWEEN THE SPAR AND ADJACENT STIFFENER IS EQUIVALENT TO LOCAL STIFFENER SPACING.

[D] SEE DETAIL III FOR A SAMPLE CALCULATION OF MATERIAL THAT WAS DECREASED.

[E] TO FIND THE QUANTITY OF MATERIAL THAT HAS DECREASED BETWEEN THE REAR SPAR AND THE FRONT SPAR, SEE DETAIL II.

[F] TO FIND THE QUANTITY OF DAMAGE BETWEEN THE FRONT SPAR AND THE REAR SPAR, DO AS FOLLOWS:
- FIND A LINE BETWEEN THE FRONT SPAR AND THE REAR SPAR. THIS LINE MUST BE INCLINED LESS THAN 15 DEGREES FROM A LINE THAT IS PERPENDICULAR TO THE STIFFENERS
- FIND ALL DAMAGE THAT IS LESS THAN 1.0 INCH FROM THE LINE SPECIFIED ABOVE. INCLUDE THIS DAMAGE IN THE TOTAL DAMAGE FROM THE FRONT SPAR TO THE REAR SPAR.

Wing Inspar Skin Allowable Damage (Inboard of WS 583.00)
(Alternate Method)
Figure 1A (Sheet 4)

BOEING PROPRIETARY - Copyright © - Unpublished Work - See title page for details.

ZONE (WING STATIONS)	ALLOWABLE DAMAGE [A]		
	MAX DEPTH OF DAMAGE AFTER CLEANUP	MAX LOSS OF CROSS-SECTIONAL AREA BETWEEN ADJACENT STIFFENERS OR BETWEEN A SPAR AND A STIFFENER (SQ. IN.) [B] [C]	TOTAL MAX LOSS OF CROSS-SECTIONAL AREA BETWEEN THE REAR SPAR AND THE FRONT SPAR (SQ. IN.) [E]
INBOARD OF WS 150	0.024	0.038	0.113
WS 150 TO WS 205	0.024	0.038	0.113
WS 205 TO WS 285	0.024	0.038	0.113
WS 285 TO WS 315	0.025	0.039	0.047
WS 315 TO WS 370	0.025	0.039	0.047
WS 370 TO WS 400	0.025	0.039	0.047
WS 400 TO WS 445	0.025	0.039	0.047
WS 445 TO WS 480	0.016	0.007	0.021
WS 480 TO WS 525	0.016	0.007	0.021
WS 525 TO WS 583	0.016	0.007	0.021

ALLOWABLE DAMAGE UPPER SKIN
TABLE I

ZONE (WING STATIONS)	ALLOWABLE DAMAGE [A]		
	MAX DEPTH OF DAMAGE AFTER CLEANUP	MAX LOSS OF CROSS-SECTIONAL AREA BETWEEN ADJACENT STIFFENERS OR BETWEEN A SPAR AND A STIFFENER (SQ. IN.) [B] [C]	TOTAL MAX LOSS OF CROSS-SECTIONAL AREA BETWEEN THE REAR SPAR AND THE FRONT SPAR (SQ. IN.) [E]
INBOARD OF WS 150	0.021	0.048	0.410
WS 150 TO WS 205	0.021	0.048	0.410
WS 205 TO WS 285	0.041	0.092	0.343
WS 285 TO WS 315	0.041	0.092	0.343
WS 315 TO WS 370	0.026	0.059	0.180
WS 370 TO WS 400	0.026	0.059	0.180
WS 400 TO WS 445	0.020	0.045	0.100
WS 445 TO WS 480	0.020	0.045	0.100
WS 480 TO WS 525	0.019	0.020	0.080
WS 525 TO WS 583	0.019	0.020	0.080

ALLOWABLE DAMAGE LOWER SKIN
TABLE II

Wing Inspar Skin Allowable Damage (Inboard of WS 583.00)
(Alternate Method)
Figure 1A (Sheet 5)

SAMPLE CALCULATION

ASSUME THE DAMAGE IS TWO ABRASIONS LOCATED AS SHOWN ON THE LOWER SKIN:

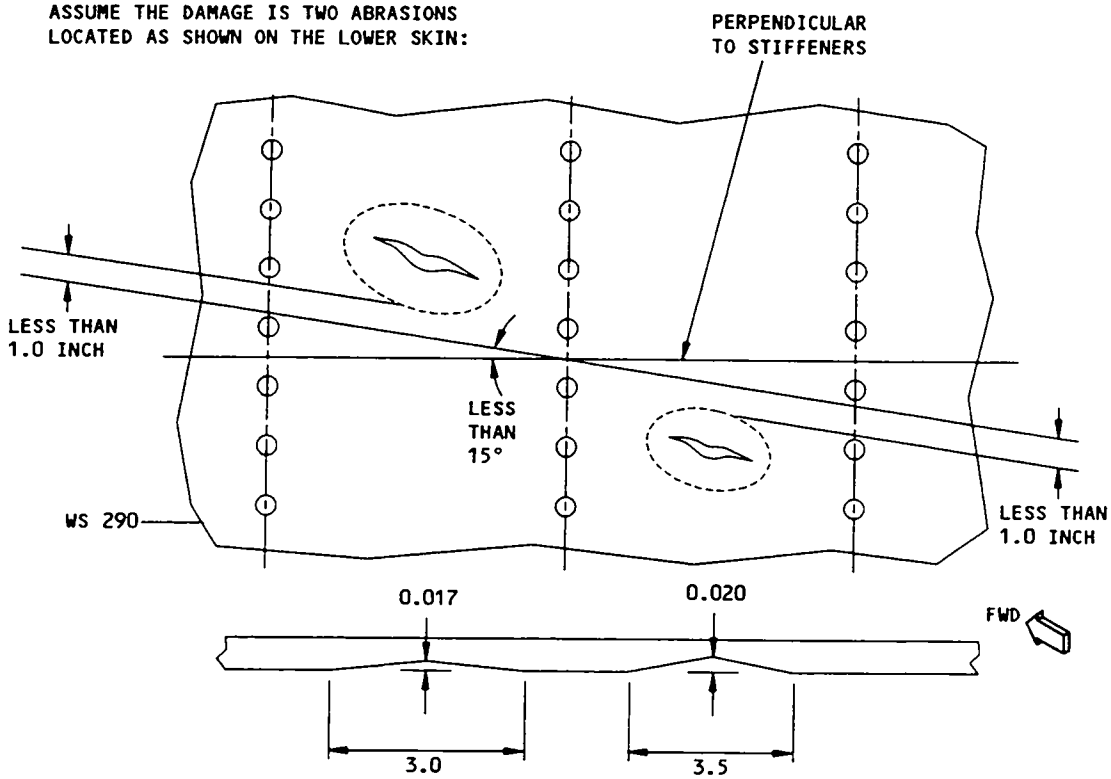

SECTION THROUGH DAMAGE AFTER CLEAN-UP
PERPENDICULAR TO STIFFENERS
DETAIL III

STEP 1 - CHECK DEPTH OF DAMAGE.
FROM TABLE II PERMITTED DEPTH OF DAMAGE IS 0.041. BOTH AREAS OF DAMAGE ARE WITHIN THIS LIMITATION.

STEP 2 - CHECK LOSS IN AREA BETWEEN STIFFENERS.
LOSS IN AREA OF FORWARD DAMAGE PERPENDICULAR TO STIFFENERS = $\frac{3.0}{2}$ X 0.017 = 0.025 SQ. IN.

LOSS IN AREA OF AFT DAMAGE = $\frac{3.5}{2}$ X 0.020 = 0.035 SQ. IN.

THESE ARE BOTH WITHIN THE 0.092 LIMITATION OF TABLE II.

STEP 3 - CHECK THE TOTAL LOSS IN AREA BETWEEN FRONT AND REAR SPARS. F

AS THE TWO AREAS OF DAMAGE ARE LESS THAN 1.0 INCH FROM THE INCLINED LINE THE DAMAGE IS CUMULATIVE. 0.025 + 0.035 = 0.060 SQ. IN. THIS IS WITHIN THE 0.343 LIMITATION OF TABLE II.

AS ALL OF THE CRITERIA ARE WITHIN TABLE II LIMITATIONS THE DAMAGE SHOWN WOULD BE ACCEPTABLE

Wing Inspar Skin Allowable Damage (Inboard of WS 583.00)
(Alternate Method)
Figure 1A (Sheet 6)

G25849

APPLICABILITY

THESE ALLOWABLE DAMAGE LIMITS ARE APPLICABLE TO THE UPPER AND LOWER SKINS OF THE WING. ALL WING SKIN DAMAGE IN A ZONE MUST NOT BE MORE THAN THE LIMITS GIVEN IN TABLES I AND II. FIGURE 1B DAMAGE LIMITS IS A PREFERRED METHOD TO FIGURE 1A LIMITS. DO NOT USE FIGURE 1B LIMITS TOGETHER WITH FIGURE 1A LIMITS.

THESE ALLOWABLE DAMAGE LIMITS ARE NOT APPLICABLE IN THESE AREAS:

- EXTERNAL OR INTERNAL SKIN SURFACES THAT TOUCH OTHER STRUCTURES. THESE STRUCTURES INCLUDE STIFFENERS, SPARS, RIBS, FITTINGS AND ALL OTHER STRUCTURES.
- A ZONE THAT HAS DAMAGE TO ONE OR MORE OF ITS UPPER OR LOWER STIFFENERS OR SPAR.
- THE LOWER SKIN BETWEEN STIFFENER 6 AND 8 AS SPECIFIED BY THESE LIMITS:
  - FROM A LINE 2.0 INCHES FORWARD OF THE FORWARD ROW OF THE FASTENERS ALONG STIFFENER 6.
  - TO A LINE 2.0 INCHES AFT OF THE AFT ROW OF THE FASTENERS ALONG STIFFENER 8.
- AN AREA THAT HAS BOTH OF THESE CONDITIONS:
  - IS 1.50 INCHES OR LESS FROM THE EDGE OF THE SKIN AT THE REAR SPAR.
  - THE MAXIMUM DEPTH OF DAMAGE IN THIS AREA IS MORE THAN 0.02 INCH.
- AN AREA THAT HAS BOTH OF THESE CONDITIONS:
  - IS 1.50 INCHES OR LESS FROM A CHORDWISE ROW OF FASTENERS.
  - THE MAXIMUM DEPTH OF DAMAGE IN THIS AREA IS MORE THAN 0.02 INCH.

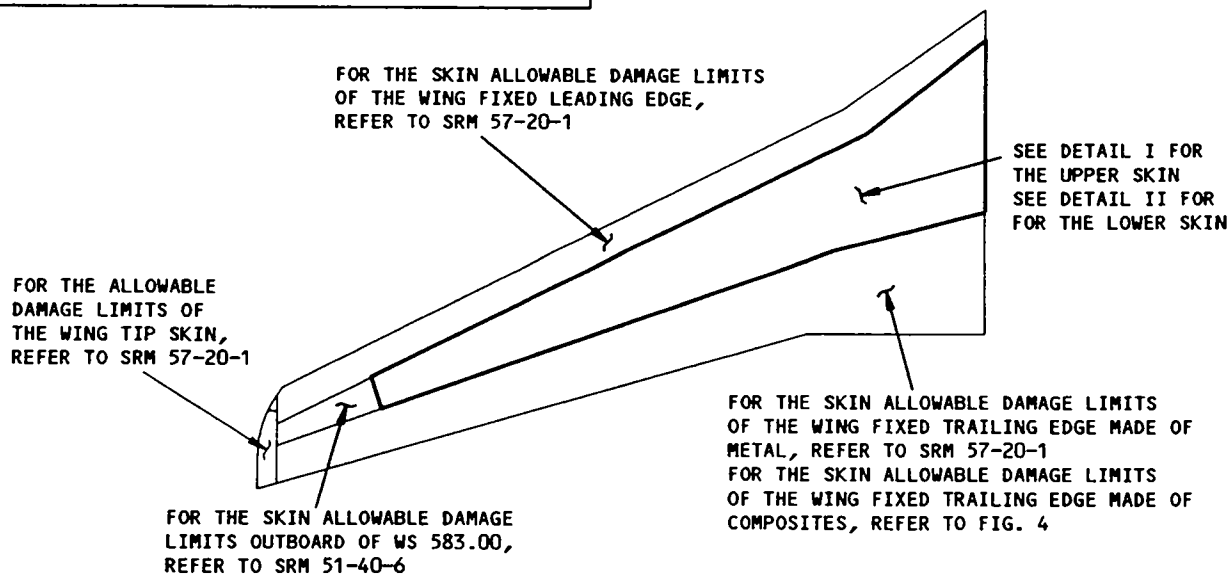

Wing Inspar Skin Allowable Damage (Inboard of WS 583.00)
(Preferred Method)
Figure 1B (Sheet 1)

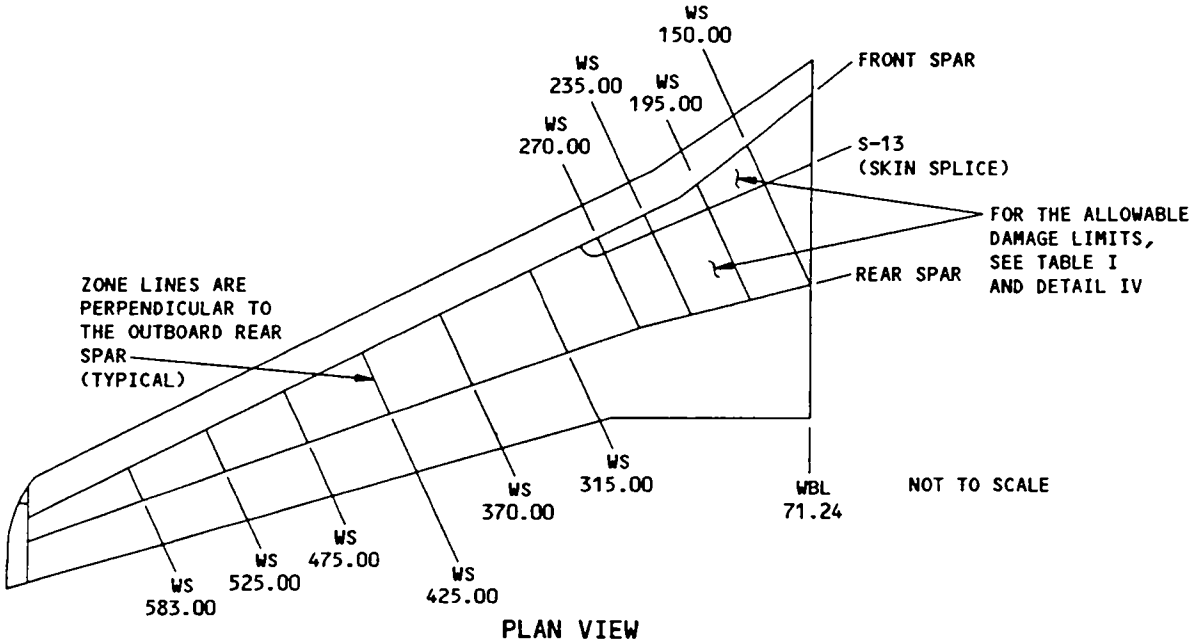

PLAN VIEW
UPPER SKIN
DETAIL I

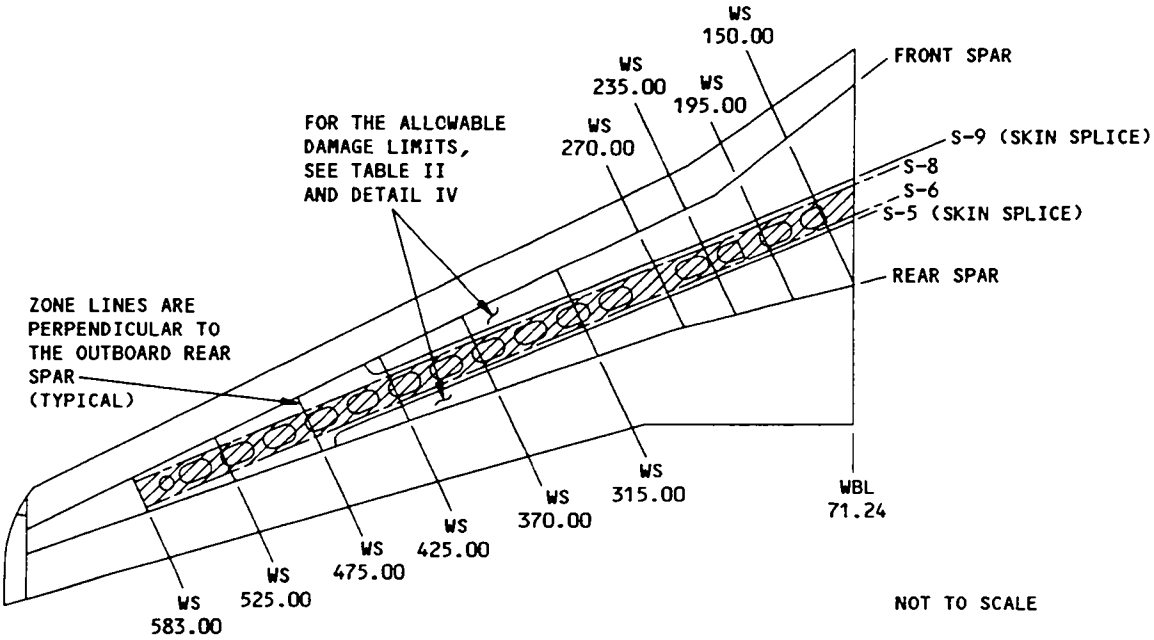

CRITICAL AREA. TELL THE BOEING COMPANY IF YOU HAVE DAMAGE IN THIS AREA. THE BOEING COMPANY WILL GIVE INSTRUCTIONS.

PLAN VIEW
LOWER SKIN
DETAIL II

Wing Inspar Skin Allowable Damage (Inboard of WS 583.00)
(Preferred Method)
Figure 1B (Sheet 2)

NOTES

- DAMAGE, SUCH AS BLENDOUTS, TRIMOUTS, OR DENTS:
  - THAT OCCUR TO A STRUCTURALLY SIGNIFICANT ITEM (SSI) AS GIVEN IN SRM 51-00-4, FIG. 3 AND,
  - THAT ARE WITHIN ALLOWABLE DAMAGE LIMITS OF THE BOEING SRM,

  DO NOT HAVE AN EFFECT ON THE DAMAGE TOLERANCE PROPERTIES OF THE SSI. THEREFORE, EXISTING SUPPLEMENTAL STRUCTURAL INSPECTION DOCUMENT (SSID) INSPECTION PROGRAMS REMAIN EFFECTIVE.
- ALL DIMENSIONS ARE IN INCHES, UNLESS GIVEN DIFFERENTLY.
- FOR ALLOWABLE DAMAGE LIMITS FOR THE UPPER SKIN OF THE INSPAR WING, REFER TO TABLE I.
- FOR ALLOWABLE DAMAGE LIMITS FOR THE LOWER SKIN OF THE INSPAR WING, REFER TO TABLE II.
- FOR REMOVAL OF DAMAGE AT A FASTENER, REFER TO FIG. 5.
- REFER TO AMM 51-21 FOR THE REFINISH OF REWORKED SURFACES.
- REFER TO NDT PART 6, 51-00-00 FOR HFEC INSPECTION PROCEDURE.
- REFER TO SOPM 20-20-02 FOR PENETRANT INSPECTION PROCEDURES.
- REFER TO SOPM 20-44-04 FOR THE APPLICATION OF CORROSION RESISTANT PRIMER.
- REFER TO SRM 51-70 FOR AERODYNAMIC SMOOTHNESS REQUIREMENTS.
- REFER TO SRM 51-10-1 FOR DAMAGE CLASSIFICATION.
- REFER TO SRM 51-10-2 FOR PROTECTIVE TREATMENT OF METALLIC MATERIALS.
- REFER TO SRM 51-20-4 FOR REPAIR SEALING.
- REFER TO SRM 51-10-8 FOR SHOT PEENING PROCEDURES.
- AFTER ALL DAMAGE CLEANUP:
  - MAKE THE ROUGHNESS OF THE BLENDOUT AREA 125 MICROINCHES R_a OR SMOOTHER
  - DO A 10X VISUAL OR PENETRANT INSPECTION TO MAKE SURE THE DAMAGE IS REMOVED
  - SHOT PEEN THE DAMAGED AREA ON THE EXTERIOR SKIN SURFACE. ROTARY PEEN DAMAGED AREAS IN THE FUEL TANKS
  - APPLY ALODINE 600
  - APPLY BMS 10-79, TYPE III, PRIMER TO THE EXTERNAL SKIN SURFACE. APPLY BMS 10-20, TYPE II PRIMER TO THE INTERNAL SKIN SURFACE.
- TO RESTORE AN AERODYNAMIC SURFACE, DO AS FOLLOWS:
  - FILL THE AREAS WITH BMS 5-95 SEALANT. REFER TO SRM 51-20-4
  - LET THE SEALANT CURE
  - APPLY ONE MORE COAT OF BMS 10-79, TYPE III PRIMER OVER THE SEALANT. REFER TO SOPM 20-44-04
  - APPLY ONE LAYER OF BMS 10-100 TO THE UPPER SKIN. APPLY BMS 5-95, CLASS F SEALANT, PLUS BMS 10-60 PROTECTIVE ENAMEL TO THE LOWER SKIN.

A KEEP A RECORD OF THE CROSS-SECTIONAL AREA REMOVED FROM EXTERNAL AND INTERNAL SKIN SURFACES, STIFFENERS AND SPAR CHORDS. THIS WILL PREVENT ACCIDENTAL REMOVAL OF MORE MATERIAL THAN IS PERMITTED.

B FOR REMOVAL OF NICK, GOUGE, CORROSION, AND SCRATCH DAMAGE ON A SURFACE, SEE DETAIL IV. IF THE DEPTH OF DAMAGE OR CROSS SECTIONAL AREA LOSS IS MORE THAN SHOWN IN THE TABLES, DO AS FOLLOWS:
- DO NOT BLEND OUT THE DAMAGE AT 10X FOR THE UPPER SKIN OR 20X FOR THE LOWER SKIN
- REMOVE THE MINIMUM AMOUNT OF MATERIAL TO CLEAN UP THE DAMAGE
- GO TO THE BOEING COMPANY FOR INSTRUCTIONS.

C TO FIND THE QUANTITY OF MATERIAL THAT HAS DECREASED AT A STIFFENER OR SPAR, SEE DETAIL V.

D THE REGION OF SKIN AT A SPAR IS USED TO FIND THE ALLOWABLE DAMAGE LIMITS. THIS REGION IS FOUND BETWEEN THE EDGE OF THE SKIN AT THE SPAR AND THE LINE THAT IS IN THE MIDDLE OF:
- THE CENTERLINE OF THE INNER ROW OF THE SPAR CHORD TO SKIN FASTENERS
- THE CENTERLINE OF THE FASTENERS ALONG THE ADJACENT STIFFENER.

SEE DETAIL III.

E THE REGION OF SKIN AT A STIFFENER IS USED TO FIND THE ALLOWABLE DAMAGE LIMITS. THIS REGION IS FOUND BETWEEN LINES THAT ARE IN THE MIDDLE OF:
- THE CENTERLINE OF THE FASTENERS ALONG THE STIFFENER
- THE CENTERLINE OF THE FASTENERS ALONG THE ADJACENT STIFFENER ON EACH SIDE.

WHEN DAMAGE IS CLOSE TO A SPLICE STIFFENER, THE CENTERLINE OF THE OUTER ROW OF FASTENERS AT THE SPLICE STIFFENER IS USED TO FIND THE REGION OF SKIN AT A STIFFENER.

SEE DETAIL III.

F TO FIND THE QUANTITY OF MATERIAL THAT HAS DECREASED BETWEEN THE REAR SPAR AND THE FRONT SPAR, SEE DETAIL VI.

Wing Inspar Skin Allowable Damage (Inboard of WS 583.00)
(Preferred Method)
Figure 1B (Sheet 3)

BOEING PROPRIETARY - Copyright © - Unpublished Work - See title page for details.

NOTES (CONTINUED)

[G] SEE DETAIL VII FOR A SAMPLE CALCULATION OF MATERIAL THAT HAS DECREASED.

[H] TO FIND THE QUANTITY OF DAMAGE IN A CROSS SECTIONAL AREA AT A STIFFENER OR A SPAR, DO AS FOLLOWS:

- FIND THE DAMAGE AREAS THAT ARE IN ONE SKIN SEGMENT AT A STIFFENER OR A SPAR [D] [E]
- FIND LINES THAT ARE PERPENDICULAR TO THE STIFFENER
- MEASURE THE DIMENSION BETWEEN THE PERPENDICULAR LINES.

IF THE DIMENSION IS LESS THAN 1.0 INCH, INCUDE BOTH AREAS OF DAMAGE IN THE QUANTITY OF CROSS SECTIONAL AREA LOSS.

[I] IF THERE IS DAMAGE BETWEEN TWO ADJACENT STIFFENERS, FIND THE AREAS OF THE DAMAGE THAT APPLY TO THE NEAREST STIFFENER:

- FIND THE MIDDLE OF THE AREA BETWEEN THE TWO STIFFENERS
- INCLUDE THE AREA OF DAMAGE ON EACH SIDE OF THAT MIDDLE AS PART OF THE CROSS SECTIONAL AREA AT THE NEAREST STIFFENER. THIS CROSS SECTIONAL AREA IS SHOWN AS SKIN REGION 'A' OR SKIN REGION 'B' IN DETAIL V. [E]

IF THERE IS DAMAGE BETWEEN A STIFFENER AND A SPAR, FIND THE AREAS OF THE DAMAGE THAT APPLY TO EACH:

- FIND THE MIDDLE OF THE AREA BETWEEN THE STIFFENER AND THE SPAR [D] [E]
- INCLUDE THE AREA OF DAMAGE ON EACH SIDE OF THAT MIDDLE AS PART OF THE CROSS SECTIONAL AREA AT THE STIFFENER OR AT THE SPAR.

[J] TO FIND THE QUANTITY OF DAMAGE BETWEEN THE FRONT SPAR AND THE REAR SPAR, DO AS FOLLOWS:

- FIND A LINE BETWEEN THE FRONT SPAR AND THE REAR SPAR. THIS LINE MUST BE INCLINED LESS THAN 15 DEGREES FROM A LINE THAT IS PERPENDICULAR TO THE STIFFENERS
- FIND ALL DAMAGE THAT IS LESS THAN 1.0 INCH FROM THE LINE SPECIFIED ABOVE. INCLUDE THIS DAMAGE IN THE TOTAL DAMAGE FROM THE FRONT SPAR TO THE REAR SPAR.

[K] IN THIS AREA, DAMAGE IS PERMITTED AT ONLY ONE UPPER STIFFENER IN THE ZONE. THE MAXIMUM DEPTH OF DAMAGE PERMITTED IS 0.02 INCHES. THE MAXIMUM LOSS OF AREA PERMITTED IS 0.02 SQUARE INCHES.

[L] IN THIS AREA, THE MAXIMUM DEPTH OF DAMAGE PERMITTED IS 0.02 INCH. THE MAXIMUM LOSS OF AREA PERMITTED IS 0.02 SQUARE INCH.

THE MAXIMUM SPANWISE DIMENSION PERMITTED FOR ALL BLENDOUTS ADDED TOGETHER, FOR EACH STIFFENER IN THE ZONE, IS 4.0 INCHES.

[M] IN THIS AREA, THE MAXIMUM DEPTH OF DAMAGE PERMITTED IS 0.02 INCH. THE MAXIMUM LOSS OF AREA PERMITTED IS 0.02 SQUARE INCH.

THE MAXIMUM SPANWISE DIMENSIONS PERMITTED FOR ALL BLENDOUTS ADDED TOGETHER, FOR THE SPAR IN THE ZONE, IS 4.0 INCHES.

Wing Inspar Skin Allowable Damage (Inboard of WS 583.00)
(Preferred Method)
Figure 1B (Sheet 4)

ZONE (WING STATIONS)	ALLOWABLE DAMAGE [A]										
	MAX DEPTH OF DAMAGE AFTER CLEANUP AND MAX LOSS OF CROSS-SECTIONAL AREA AT A STIFFENER OR SPAR [B] [C]										TOTAL MAX LOSS OF CROSS-SECTIONAL AREA FROM FRONT SPAR TO REAR SPAR (SQ.IN.) [F]
	REAR SPAR [D]		STIFFENER NO. 1 THROUGH STIFFENER NO. 7 [E]		STIFFENER NO. 8 THROUGH STIFFENER NO. 10 [E]		STIFFENER NO. 11 THROUGH STIFFENER NO. 20 [E]		FRONT SPAR [D]		
	MAX DEPTH (IN.)	MAX AREA LOSS (SQ. IN.)	MAX DEPTH (IN.)	MAX AREA LOSS (SQ. IN.)	MAX DEPTH (IN.)	MAX AREA LOSS (SQ. IN.)	MAX DEPTH (IN.)	MAX AREA LOSS (SQ. IN.)	MAX DEPTH (IN.)	MAX AREA LOSS (SQ. IN.)	
INBOARD OF WS 150	0.03	0.04	0.02	0.03	0.02	0.03	[L]	[L]	[M]	[M]	0.11
WS 150 TO WS 195	0.03	0.04	0.02	0.03	0.02	0.03	[L]	[L]	[M]	[M]	0.11
WS 195 TO WS 235	0.03	0.04	0.02	0.02	[K]	[K]	[K]	[K]	0.02	0.03	0.11
WS 235 TO WS 270	0.03	0.04	0.02	0.02	[K]	[K]	[K]	[K]	0.03	0.04	0.11
WS 270 TO WS 315	0.03	0.04	0.02	0.02	[K]	[K]	[K]	[K]	0.03	0.04	0.05
WS 315 TO WS 370	0.02	0.03	0.02	0.02	[K]	[K]	[K]	[K]	0.02	0.03	0.05
WS 370 TO WS 425	0.02	0.03	0.02	0.02	0.02	0.02	[L]	[L]	[M]	[M]	0.05
WS 425 TO WS 475	0.02	0.02	0.02	0.02	0.02	0.02	[L]	[L]	[M]	[M]	0.02
WS 475 TO WS 525	0.02	0.02	—	—	0.02	0.02	[L]	[L]	[M]	[M]	0.02
WS 525 TO WS 583	0.02	0.02	—	—	0.02	0.02	[L]	[L]	[M]	[M]	0.02

ALLOWABLE DAMAGE LIMITS FOR THE UPPER SKIN
TABLE I

Wing Inspar Skin Allowable Damage (Inboard of WS 583.00)
(Preferred Method)
Figure 1B (Sheet 5)

ZONE (WING STATIONS)	ALLOWABLE DAMAGE [A]								
	MAX DEPTH OF DAMAGE AFTER CLEANUP AND MAX LOSS OF CROSS-SECTIONAL AREA AT A STIFFENER OR SPAR [B] [C]								TOTAL MAX LOSS OF CROSS-SECTIONAL AREA FROM FRONT SPAR TO REAR SPAR (SQ.IN.) [F]
	REAR SPAR [D]		STIFFENER NO. 1 THROUGH STIFFENER NO. 6 [E]		STIFFENER NO. 8 THROUGH STIFFENER NO. 12 [E]		FRONT SPAR [D]		
	MAX DEPTH (IN.)	MAX AREA LOSS (SQ. IN.)	MAX DEPTH (IN.)	MAX AREA LOSS (SQ. IN.)	MAX DEPTH (IN.)	MAX AREA LOSS (SQ. IN.)	MAX DEPTH (IN.)	MAX AREA LOSS (SQ. IN.)	
INBOARD OF WS 150	0.04	0.08	0.03	0.05	0.03	0.05	0.04	0.08	0.41
WS 150 TO WS 195	0.04	0.08	0.03	0.05	0.03	0.05	0.04	0.08	0.41
WS 195 TO WS 235	0.04	0.08	0.04	0.08	0.04	0.08	0.04	0.08	0.41
WS 235 TO WS 270	0.05	0.10	0.05	0.10	0.05	0.10	0.05	0.10	0.34
WS 270 TO WS 315	0.05	0.10	0.05	0.10	0.04	0.08	0.04	0.08	0.34
WS 315 TO WS 370	0.04	0.08	0.03	0.06	0.03	0.06	0.03	0.06	0.18
WS 370 TO WS 425	0.03	0.06	0.03	0.04	[L]	[L]	[M]	[M]	0.18
WS 425 TO WS 475	0.03	0.06	0.03	0.04	[L]	[L]	[M]	[M]	0.10
WS 475 TO WS 525	0.03	0.06	0.02	0.04	[L]	[L]	[M]	[M]	0.08
WS 525 TO WS 583	0.02	0.04	0.02	0.04	[L]	[L]	[M]	[M]	0.08

ALLOWABLE DAMAGE LIMITS FOR THE LOWER SKIN
TABLE II

Wing Inspar Skin Allowable Damage (Inboard of WS 583.00)
(Preferred Method)
Figure 1B (Sheet 6)

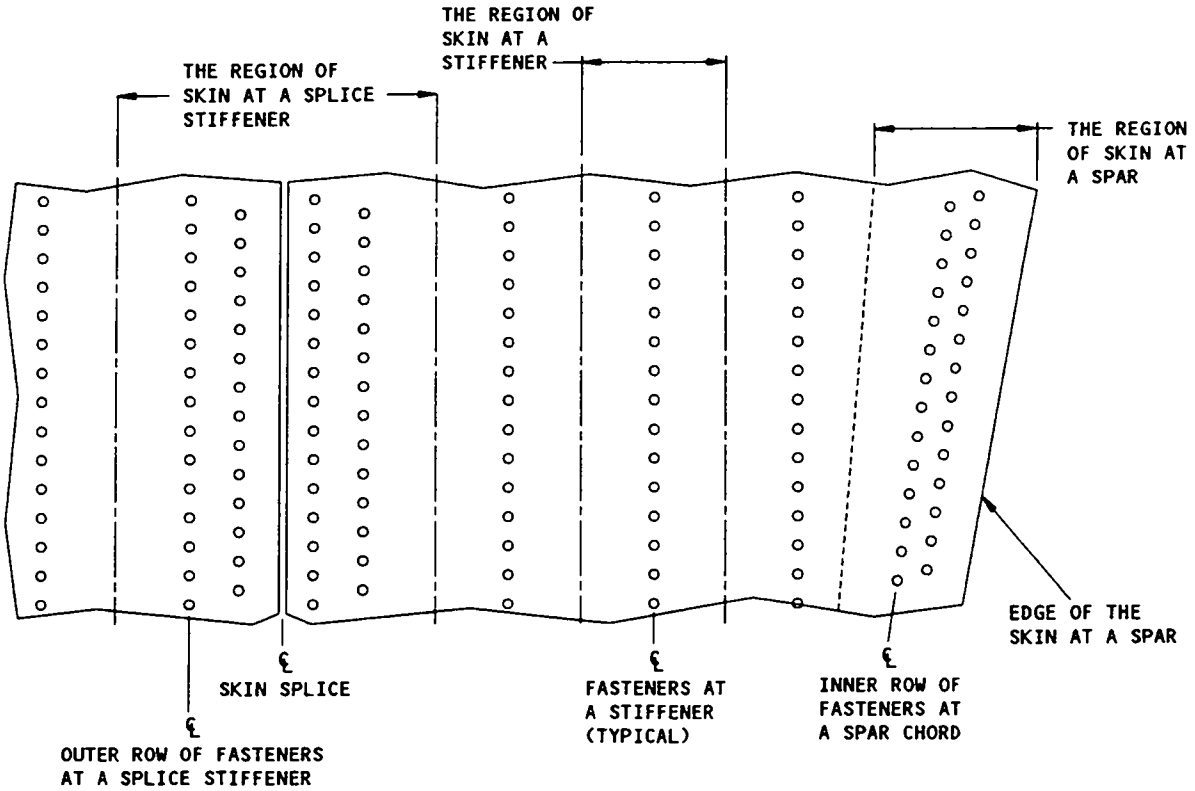

THE REGIONS OF SKIN THAT ARE USED TO FIND THE ALLOWABLE DAMAGE LIMITS AT A STIFFENER OR A SPAR

DETAIL III

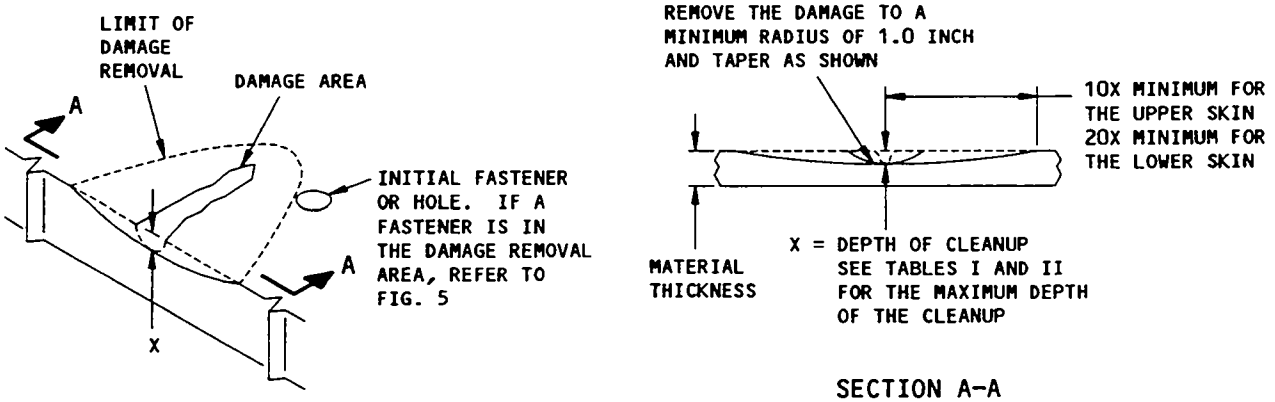

SECTION A-A

REMOVAL OF NICK, GOUGE, CORROSION, AND SCRATCH DAMAGE ON A SURFACE
DETAIL IV

Wing Inspar Skin Allowable Damage (Inboard of WS 583.00)
(Preferred Method)
Figure 1B (Sheet 7)

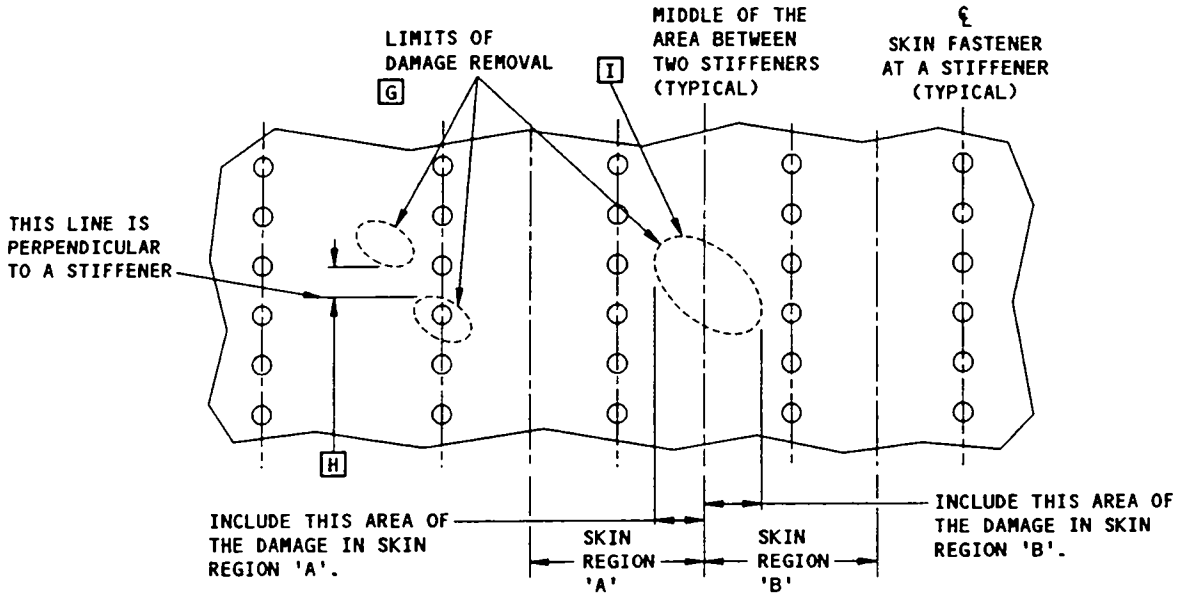

QUANTITY OF DAMAGE AT A STIFFENER OR A SPAR
DETAIL V

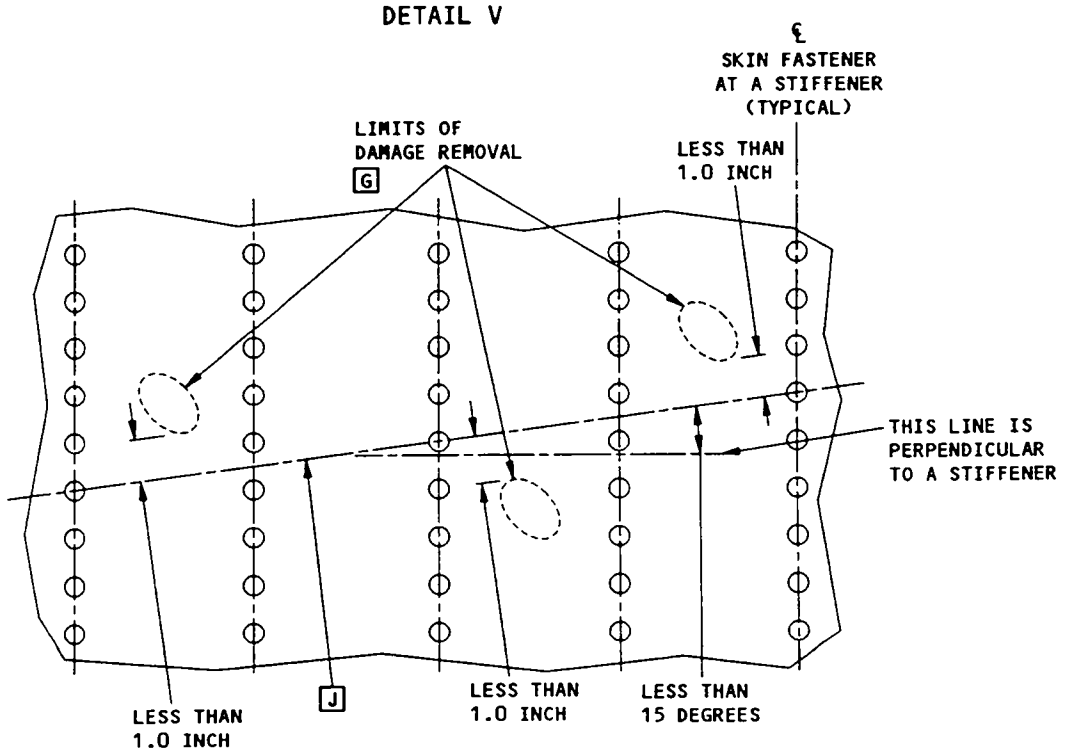

QUANTITY OF DAMAGE BETWEEN THE FRONT SPAR AND THE REAR SPAR
DETAIL VI

Wing Inspar Skin Allowable Damage (Inboard of WS 583.00)
(Preferred Method)
Figure 1B (Sheet 8)

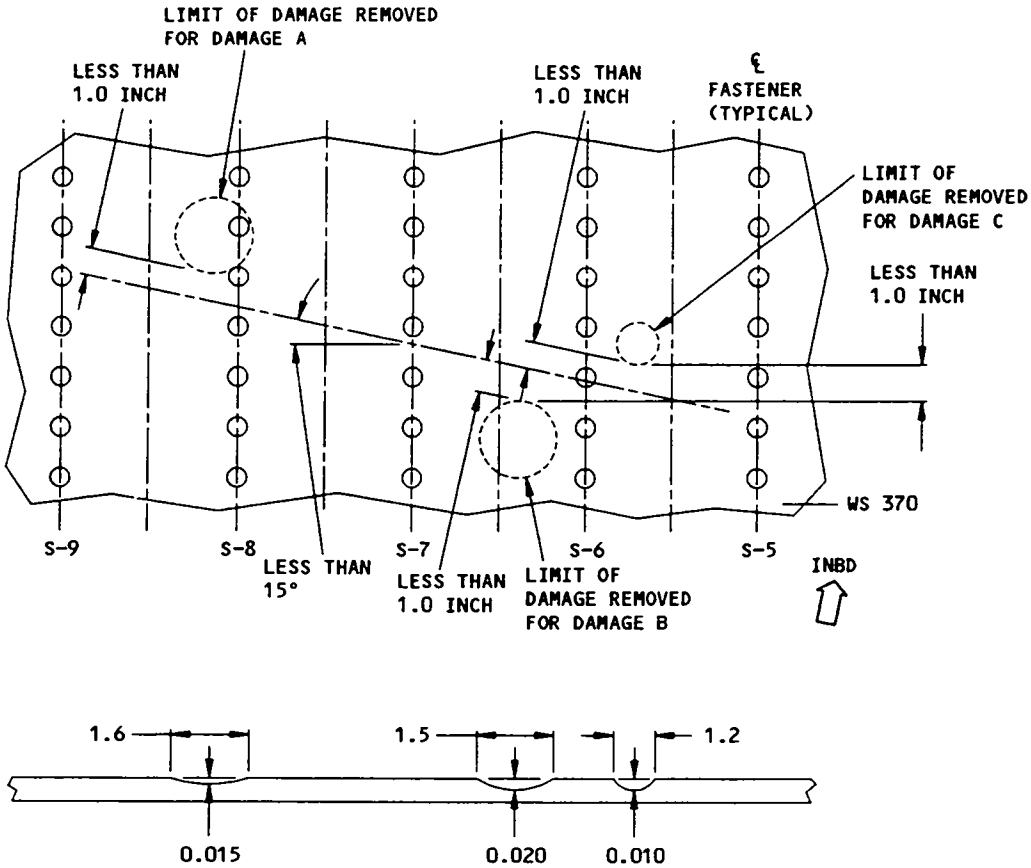

CLEANUP OF DAMAGE PERPENDICULAR TO THE STIFFENERS (SAMPLE CALCULATION ON THE PAGE THAT FOLLOWS IS FOR THREE DAMAGE LOCATIONS IN THE UPPER SKIN)
DETAIL VII

Wing Inspar Skin Allowable Damage (Inboard of WS 583.00)
(Preferred Method)
Figure 1B (Sheet 9)

STEP 1 - FIND THE ALLOWABLE DAMAGE DEPTH FOR EACH DAMAGE LOCATION SHOWN.

DAMAGE A (THE REGION OF SKIN FOR STIFFENER NO. 8):

- FROM TABLE I, WS 315 TO WS 370, THE MAXIMUM DEPTH OF DAMAGE PERMITTED IS 0.02 INCH. THE 0.015 INCH DEPTH SHOWN IS LESS THAN OR EQUAL TO 0.02 INCH.

DAMAGE B (THE REGION OF SKIN FOR STIFFENERS NO. 6 AND 7):

- FROM TABLE I, WS 315 TO WS 370, THE MAXIMUM DEPTH OF DAMAGE PERMITTED FOR BOTH STIFFENERS IS 0.02 INCH. THE 0.02 INCH DEPTH SHOWN IS LESS THAN OR EQUAL TO 0.02 INCH.

NOTE: IF THE ALLOWABLE DAMAGE DEPTH FOR STIFFENERS NO. 6 AND 7 IS NOT THE SAME, USE THE SMALLER DEPTH.

DAMAGE C (THE REGION OF SKIN FOR STIFFENER NO. 6):

- FROM TABLE I, WS 315 TO WS 370, THE MAXIMUM DEPTH OF DAMAGE PERMITTED IS 0.02 INCH. THE 0.01 INCH DEPTH SHOWN IS LESS THAN OR EQUAL TO 0.02 INCH.

STEP 2 - CALCULATE THE CROSS SECTIONAL AREA THAT HAS DECREASED AT THE STIFFENERS. THEN FIND IF THAT DECREASED AREA IS PERMITTED.

THE AREA THAT HAS DECREASED AT DAMAGE A = 1.6/2 X 0.015 = 0.012 SQUARE INCH

FROM TABLE I, WS 315 TO WS 370, THE MAXIMUM DECREASE IN CROSS SECTIONAL AREA PERMITTED AT STIFFENER NO. 8 IS 0.02 SQUARE INCH. THE 0.012 SQUARE INCH THAT IS CALCULATED IS LESS THAN OR EQUAL TO 0.02 SQUARE INCH.

AT DAMAGE B, THE AREA THAT HAS DECREASED AT STIFFENER NO. 6 IS 80% OF THE TOTAL AREA THAT HAS DECREASED. THE AREA THAT HAS DECREASED AT STIFFENER NO. 7 IS 20% OF THE TOTAL AREA THAT HAS DECREASED.

THE AREA THAT HAS DECREASED AT DAMAGE B = 1.5/2 X 0.02 = 0.015 SQUARE INCH

0.80 X 0.015 = 0.012 SQUARE INCH (APPLIED TO STIFFENER NO. 6)

0.20 X 0.015 = 0.003 SQUARE INCH (APPLIED TO STIFFENER NO. 7)

FROM TABLE I, WS 315 TO WS 370, THE MAXIMUM DECREASE IN CROSS SECTIONAL AREA PERMITTED AT STIFFENER NO. 7 IS 0.02 SQUARE INCH. THE 0.003 SQUARE INCH THAT IS CALCULATED IS LESS THAN OR EQUAL TO 0.02 SQUARE INCH.

THE DIMENSION BETWEEN DAMAGE B AND DAMAGE C IS LESS THAN 1.0 INCH. THUS, ADD THE AREA THAT HAS DECREASED AT STIFFENER NO. 6 OF DAMAGE B (0.012 SQUARE INCH) TO THE AREA THAT HAS DECREASED AT DAMAGE C.

THE AREA THAT HAS DECREASED AT DAMAGE C = 1.2/2 X 0.01 = 0.006 SQUARE INCH

THE TOTAL AREA THAT HAS DECREASED = 0.006 + 0.012 (FROM DAMAGE B) = 0.018 SQUARE INCH

FROM TABLE I, WS 315 TO WS 370, THE MAXIMUM CROSS SECTIONAL AREA LOSS PERMITTED AT STIFFENER NO. 6 IS 0.02 SQUARE INCH. THE 0.018 SQUARE INCH THAT IS CALCULATED IS LESS THAN OR EQUAL TO 0.02 SQUARE INCH.

STEP 3 - CALCULATE THE TOTAL CROSS SECTIONAL AREA THAT HAS DECREASED BETWEEN THE FRONT AND REAR SPARS. THEN FIND IF THAT DECREASED AREA IS PERMITTED. [J]

ADD THE AREAS THAT HAVE DECREASED IN DAMAGE A,B, AND C AS THE TOTAL AREA DECREASED BETWEEN THE FRONT AND REAR SPARS.

THE TOTAL AREA THAT HAS DECREASED = 0.012 + 0.015 + 0.006 = 0.033 SQUARE INCH

FROM TABLE I, WS 315 TO WS 370, THE MAXIMUM DECREASE IN CROSS SECTIONAL AREA PERMITTED BETWEEN THE FRONT AND REAR SPARS IS 0.05 SQUARE INCH. THE 0.033 SQUARE INCH CALCULATED IS LESS THAN OR EQUAL TO 0.05 SQUARE INCH.

BECAUSE ALL VALUES ARE LESS THAN OR EQUAL TO THE LIMITS SHOWN IN TABLE I, THE DAMAGE SHOWN WOULD BE PERMITTED.

NOTE: NO DAMAGE WOULD BE PERMITTED AT STIFFENER NO. 9 OR 10, WS 315 TO WS 370. THIS IS BECAUSE DAMAGE EXISTS AT STIFFENER NO. 8.

Wing Inspar Skin Allowable Damage (Inboard of WS 583.00)
(Preferred Method)
Figure 1B (Sheet 10)

FIGURE 2 REPLACED BY
57-30-3, FIGURE 5

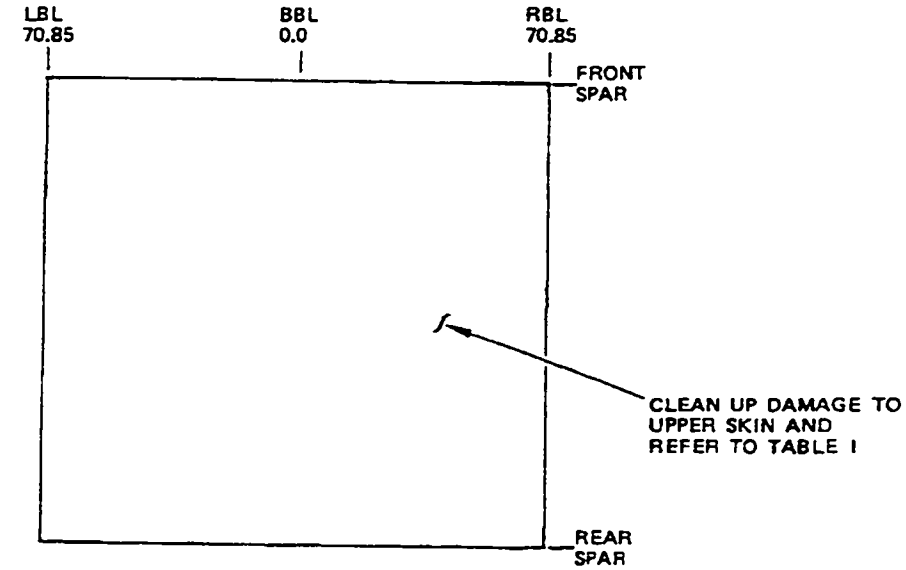

UPPER SKIN

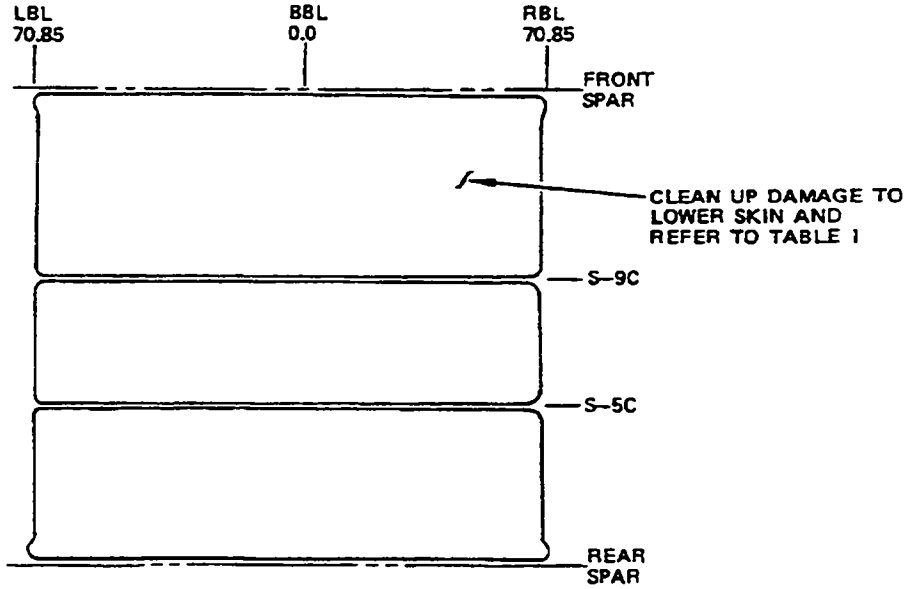

LOWER SKIN

Allowable Damage - Wing Center Section Skin
Figure 3 (Sheet 1)

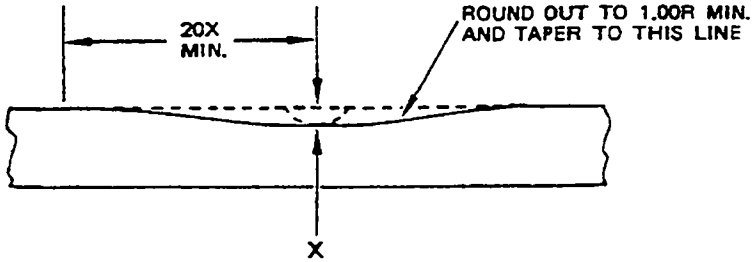

SECTION THROUGH CLEANED UP DAMAGE
DETAIL I

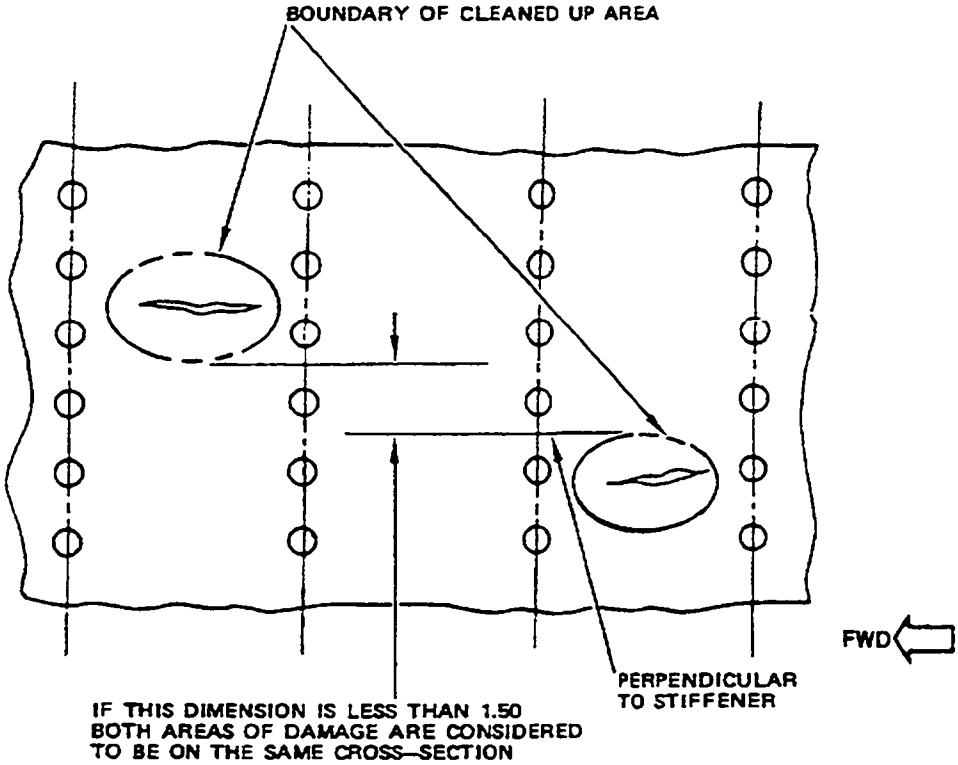

ADDITIVE DAMAGE
DETAIL II

Allowable Damage - Wing Center Section Skin
Figure 3 (Sheet 2)

NOTES

- DAMAGE, SUCH AS BLENDOUTS, TRIMOUTS, OR DENTS:
  - THAT OCCUR TO A STRUCTURALLY SIGNIFICANT ITEM (SSI) GIVEN IN SRM 51-00-4, FIG. 3 AND,
  - THAT ARE WITHIN THE ALLOWABLE DAMAGE LIMITS OF THE BOEING SRM,

  DO NOT HAVE AN EFFECT ON THE DAMAGE TOLERANCE PROPERTIES OF THE SSI. THEREFORE, EXISTING SUPPLEMENTAL STRUCTURAL INSPECTION DOCUMENT (SSID) INSPECTION PROGRAMS REMAIN EFFECTIVE.
- REFER TO SRM 51-10-1 FOR INVESTIGATION AND CLEANUP OF DAMAGE.
- DAMAGE TO CENTER WING SKINS BY NICKS, SCRATCHES, GOUGES, CRACKS, ABRASIONS AND CORROSION IS PERMITTED IF ALL OF THE LIMITATIONS IN TABLE I ARE NOT EXCEEDED. DAMAGE DEPTH AND LOSS OF CROSS-SECTIONAL AREA ARE TO BE DETERMINED AFTER CLEANUP (SEE DETAIL I).
- A RECORD OF SUCH DAMAGE MUST BE KEPT FOR ANY AFFECTED SKIN PANEL. FOR ANY RECURRING DAMAGE WHICH EXCEEDS THE TABULATED AREA OUT LIMITATIONS CONTACT THE BOEING COMPANY.
- THESE ALLOWABLE DAMAGE LIMITS ARE NOT APPLICABLE IF THERE IS UNREPAIRED DAMAGE TO ANY STIFFENER IN THE SAME AREA.
- REFER TO FIG. 1 FOR TYPICAL SAMPLE CALCULATION.
- REFER TO NDT PART 6, 51-00-00 FOR THE HFEC INSPECTION PROCEDURE.
- FLAP PEEN REWORKED AREAS AS GIVEN IN SOPM 20-10-03. USE SHOT NUMBER 330, INTENSITY 0.005A, AND 2.0 COVERAGE.
- SAND REWORKED AREAS TO 63 MICROINCHES AA SURFACE ROUGHNESS AFTER FLAP PEENING AND PRIOR TO APPLYING ALODINE AND PRIMER. SANDING BELOW PEEN VALLEYS NOT ALLOWED.
- APPLY A CHEMICAL CONVERSION COATING TO REWORKED SURFACES AS GIVEN IN SRM 51-10-2.
- APPLY ONE LAYER OF BMS 10-20, TYPE II PRIMER TO REWORKED SURFACES AS GIVEN IN AMM 51-20.
- REFINISH REWORKED AREAS AS GIVEN IN AMM 51-20. FOR THE UPPER CENTER WING SKIN, REFINISH AS GIVEN IN AMM 28-11-00/801.

[A] ALLOWABLE DAMAGE LIMITS GIVEN ARE NOT APPLICABLE IN THE FOLLOWING AREAS. (ASK THE BOEING COMPANY FOR SPECIFIC INSTRUCTIONS.)

1. WITHIN 1.50 INCHES OF ANY CHORDWISE ROW OF FASTENERS.
2. FORWARD OF A LINE 1.50 INCHES AFT OF THE AFT ROW OF FASTENERS ATTACHING THE SKIN TO THE FRONT SPAR.
3. AFT OF A LINE 1.50 INCHES FORWARD OF THE FORWARD ROW OF FASTENERS ATTACHING THE SKIN TO THE REAR SPAR.
4. WITHIN 1.50 INCHES OF FASTENERS IN THE SPANWISE SKIN SPLICE.

[B] LOSS OF CROSS-SECTIONAL AREA ON A LINE PERPENDICULAR TO THE STIFFENERS. MULTIPLE AREAS OF DAMAGE ARE TO BE CONSIDERED ON THE SAME LINE IF LESS THAN 1.50 INCHES FROM EACH OTHER MEASURED SPANWISE (SEE DETAIL II).

Allowable Damage - Wing Center Section Skin
Figure 3 (Sheet 3)

BOEING PROPRIETARY - Copyright © - Unpublished Work - See title page for details.

ZONE	ALLOWABLE DAMAGE [A]		
	MAX DEPTH AFTER CLEANUP	MAX LOSS OF CROSS-SECTIONAL AREA BETWEEN ADJACENT STIFFENERS OR BETWEEN SPAR AND STIFFENER (SQ. IN.) [B]	TOTAL MAX LOSS OF CROSS-SECTIONAL ARE BETWEEN REAR SPAR AND FRONT SPAR (SQ. IN.) [B]
UPPER SKIN	0.016	0.028	0.124
LOWER SKIN FRONT SPAR TO S-9C	0.018	0.043	0.434
LOWER SKIN S-9C TO S-5C	0.024	0.058	
LOWER SKIN S-5C TO REAR SPAR	0.029	0.070	

ALLOWABLE DAMAGE CENTER SECTION SKIN
TABLE I

Allowable Damage - Wing Center Section Skin
Figure 3 (Sheet 4)

REF DWG
65-46410

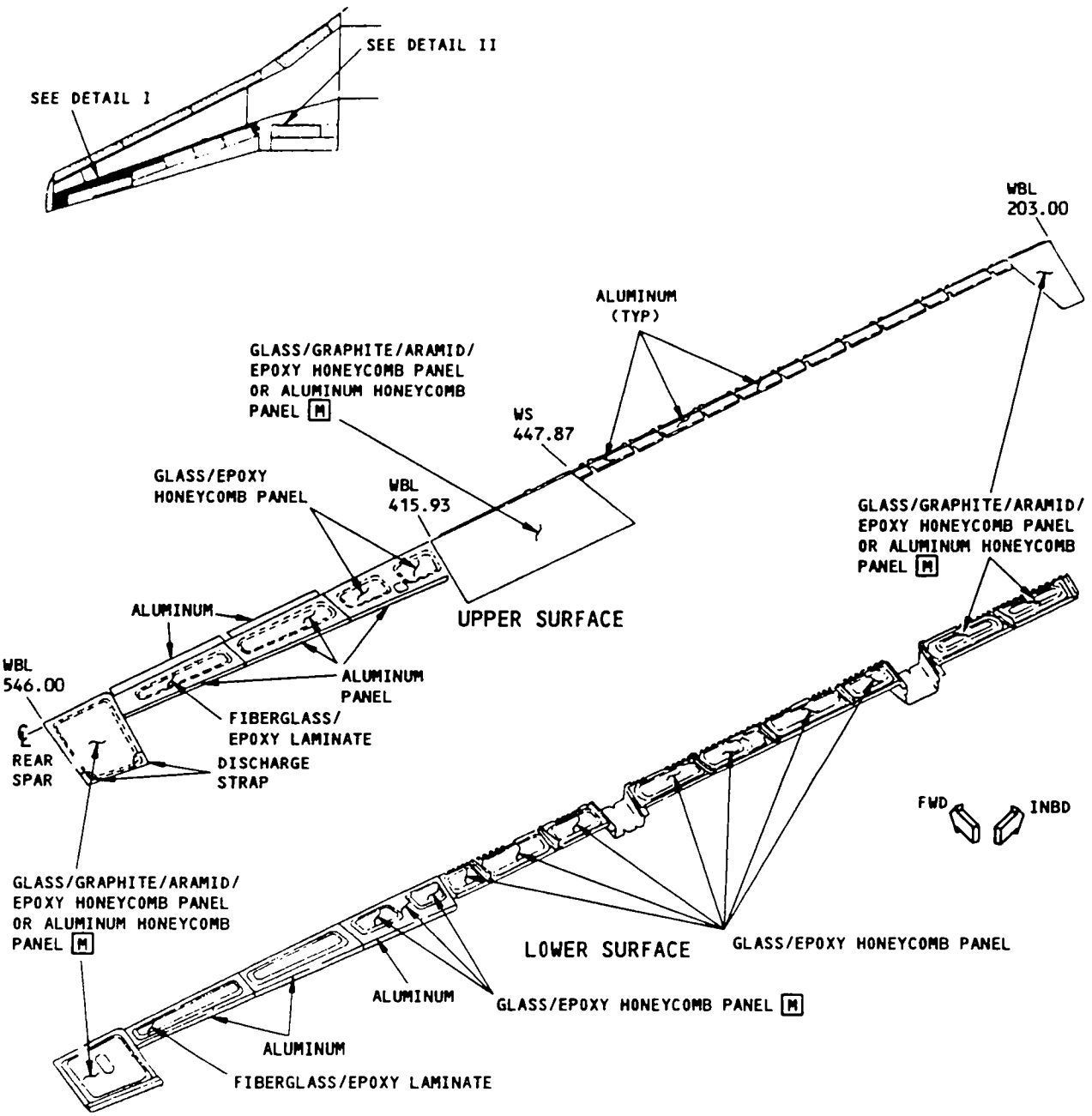

DETAIL I

Wing Fixed Trailing Edge Skin Allowable Damage
Figure 4 (Sheet 1)

C16666

REF DWG
65-50820

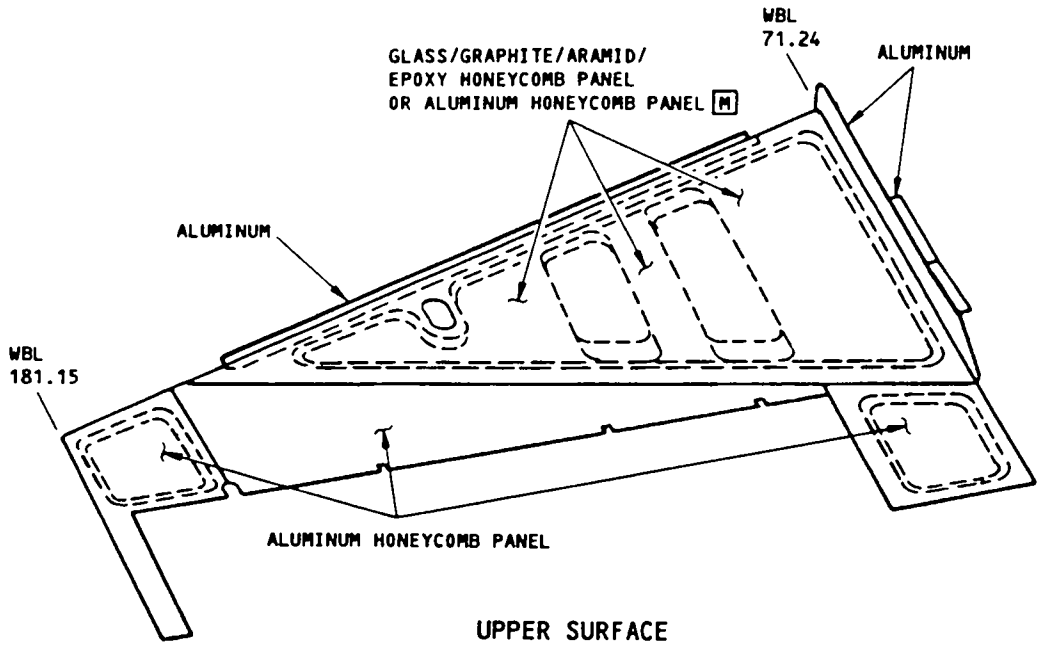

UPPER SURFACE

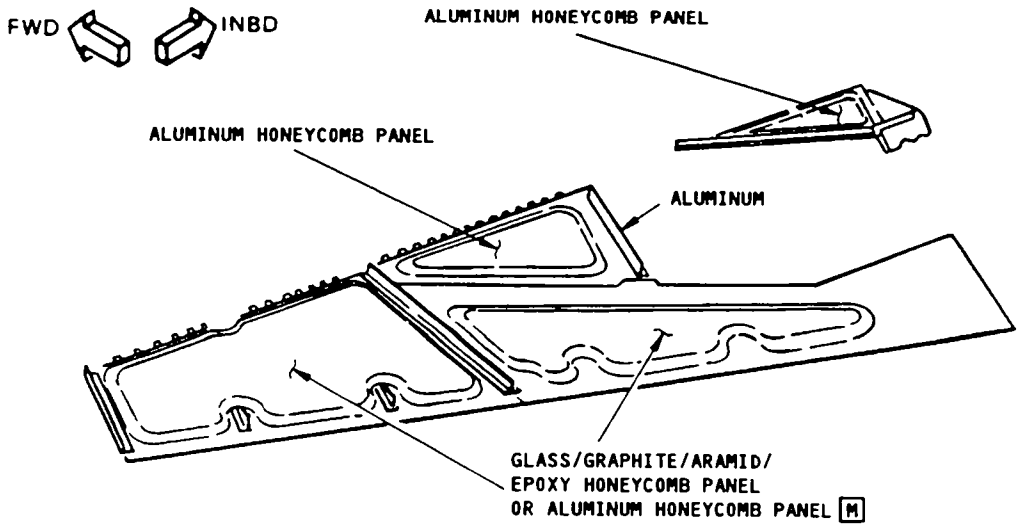

LOWER SURFACE

DETAIL II

Wing Fixed Trailing Edge Skin Allowable Damage
Figure 4 (Sheet 2)

LOCATION	CRACKS	NICKS, GOUGES, SCRATCHES, AND CORROSION	EDGE CRUSHING AND EDGE EROSION	DENTS	PUNCTURES AND HOLES	DELAMINATION
GLASS/GRAPHITE/ARAMID/ EPOXY HONEYCOMB PANELS	B	D	N	F	H	K
GLASS/EPOXY HONEYCOMB PANELS	B	D	N	F	H	K
ALUMINUM HONEYCOMB PANELS	C	E	---	G	I	J
ALUMINUM SKIN PANELS	C	E	---	S	I	---
FIBERGLASS/EPOXY LAMINATE	L	D	N	F	H	K

ALLOWABLE DAMAGE DATA FOR DETAILS I AND II
TABLE I

NOTES

- THE ALLOWABLE DAMAGE LIMITS GIVEN IN THIS FIGURE WILL NOT HAVE AN EFFECT ON A STRUCTURALLY SIGNIFICANT ITEM (SSI) GIVEN IN SRM 51-00-4, FIG. 3. THUS, NO CHANGE TO THE SUPPLEMENTAL STRUCTURAL INSPECTION DOCUMENT (SSID) INSPECTION PROGRAM IS NECESSARY.
- ALL DIMENSIONS ARE IN INCHES UNLESS GIVEN DIFFERENTLY.
- D = THE MAXIMUM DAMAGE DIMENSION.
- REFER TO AMM 51-21 TO APPLY A FINISH TO REWORKED AREAS.
- REFER TO SRM 51-10-1 FOR DAMAGE CLASSIFICATION.
- REFER TO SRM 51-10-2 FOR PROTECTIVE TREATMENT OF METALLIC AND GRAPHITE MATERIALS.
- REFER TO SRM 51-70 FOR AERODYNAMIC SMOOTHNESS.
- USUAL DAMAGE TO A PANEL EDGE CAN INCLUDE CRUSHED EDGES, CRACKS OR DELAMINATION. DAMAGE AROUND HOLES CAN INCLUDE HOLES THAT HAVE EXTENDED, FASTENERS THAT HAVE PULLED THROUGH OR CRACKS OUT OF HOLES. DAMAGE TO EDGES CAN BE REMOVED TO THE SPECIFIED LIMITS FOR THE COMPONENT.

A PROTECT THE DAMAGE FROM THE ENTRANCE OF WATER, SUNLIGHT, OR OTHER UNWANTED MATERIAL WITH ALUMINUM FOIL TAPE, 3M-Y436 OR EQUIVALENT. KEEP A RECORD OF THE DAMAGE LOCATION AND EXAMINE THE DAMAGE LOCATION AT EACH AIRPLANE "A" CHECK. REPLACE THE ALUMINUM FOIL TAPE IF ANY DETERIORATION IS FOUND. REPAIR THE DAMAGE NO LATER THAN THE NEXT AIRPLANE "C" CHECK.

B REMOVE EDGE CRACKS AS SHOWN IN DETAIL III AND VII. CRACKS ARE NOT PERMITTED IN MORE THAN ONE FASTENER HOLE IN A GROUP OF SIX. DAMAGE MUST NOT BE LARGER THAN 10% OF THE EDGE BAND LENGTH ON A SIDE. CRACK DAMAGE IS PERMITTED IN THE HONEYCOMB AREA IF:

- IT IS 1.50 INCH OR LESS IN LENGTH FOR EACH SQUARE FOOT OF AREA
- THE DAMAGE IS A MINIMUM OF 4D (EDGE TO EDGE) FROM OTHER DAMAGE, THE NEAREST FASTENER HOLE, OR THE MATERIAL EDGE.

C REMOVE EDGE CRACKS AS SHOWN IN DETAILS III AND VII A R. OTHER CRACKS ARE NOT PERMITTED.

D DAMAGE IS PERMITTED ON THE SURFACE RESIN ONLY. PROTECT THE DAMAGE AS GIVEN IN A. IF THE FIBERS ARE DAMAGED, USE THE LIMITS APPLICABLE TO CRACKS.

E REMOVE THE DAMAGE AS SHOWN IN DETAILS III, IV, VI AND VII. A MAXIMUM OF ONE DAMAGE CLEANUP AS SHOWN IN DETAIL IV IS PERMITTED IN EACH 7.0 SQUARE INCHES OF PANEL. NICKS, GOUGES, AND SCRATCHES THAT DO NOT GO THROUGH THE CLAD SURFACES MAY BE IGNORED. REFER TO SRM 51-10-1.

Wing Fixed Trailing Edge Skin Allowable Damage
Figure 4 (Sheet 3)

BOEING PROPRIETARY - Copyright © - Unpublished Work - See title page for details.

NOTES (CONT)

[F] DENT DAMAGE IS PERMITTED IF:

- IT IS 1.0 INCH OR LESS IN DIAMETER (THIS DIMENSION IS THE MAXIMUM DAMAGE DIMENSION D)
- IT IS LOCATED A MINIMUM OF 4D FROM OTHER DAMAGE, THE NEAREST HOLE, OR MATERIAL EDGE
- DENTS USUALLY INCLUDE FIBER DAMAGE AND DELAMINATION. IF FIBER DAMAGE OR DELAMINATION IS FOUND, REFER TO THE APPLICABLE DATA IN TABLE I. [A]

[G] DENTS ARE PERMITTED UP TO 1.50 SQUARE INCH WITHIN EACH SQUARE FOOT OF PANEL AREA. SEE DETAIL V. THE DAMAGE MUST NOT BE LESS THAN 4D (EDGE TO EDGE) FROM OTHER DAMAGE, A HOLE OR THE MATERIAL EDGE. IF THE DEPTH OF THE DENT IS GREATER THAN 0.05, DO ONE OF THESE PROCEDURES:

- FILL THE DENT WITH POTTING COMPOUND AS GIVEN IN SRM 51-40-1. SEAL THE AREA WITH ALUMINUM FOIL TAPE (SPEED TAPE) 3M-Y436 OR AN EQUIVALENT. KEEP A RECORD OF THE LOCATION WHERE THE SPEED TAPE IS INSTALLED. MAKE AN INSPECTION OF THAT LOCATION NO MORE THAN THE SUBSEQUENT "A" CHECK AFTER THE TAPE IS APPLIED. REPLACE THE TAPE IF IT STARTS TO COME OFF OR DETERIORATION IS FOUND. REPAIR THE DAMAGE NO MORE THAN 1000 FLIGHT HOURS AFTER THE TAPE IS APPLIED. IF THE DAMAGE BECOMES LARGER IN LESS THAN 1000 FLIGHT HOURS, REPAIR THE DAMAGE NO MORE THAN FIVE FLIGHTS AFTER THAT
- CUT OUT THE DENT AND REPAIR IT AS GIVEN IN SRM 51-40-6.

[H] PUNCTURES AND HOLES ARE PERMITTED UP TO 0.25 INCH IN DIAMETER. THE DAMAGE MUST BE A MINIMUM OF 4D (EDGE TO EDGE) FROM OTHER DAMAGE, A HOLE, OR THE MATERIAL EDGE. DO NOT CLEAN UP THE DAMAGE OTHER THAN TO REMOVE RESIN BURRS WHICH EXTEND ABOVE THE SURFACE. [A] [R]

[I] PUNCTURES AND HOLES ARE PERMITTED UP TO 0.25 INCH IN DIAMETER. THE DAMAGE MUST BE A MINIMUM OF 1.0 INCH FROM OTHER DAMAGE, A HOLE, OR THE MATERIAL EDGE. ONE HOLE FOR EACH 7.0 SQUARE INCHES OF PANEL IS PERMITTED. [A] [R]

[J] DELAMINATION IS PERMITTED UP TO 1.50 SQUARE INCH WITHIN EACH SQUARE FOOT OF PANEL AREA. DAMAGE MUST BE A MINIMUM OF 4D (EDGE TO EDGE) FROM OTHER DAMAGE, A HOLE, OR THE MATERIAL EDGE. REPAIR THE DELAMINATION NO LATER THAN 1000 FLIGHT HOURS AFTER. [A] [R]

[K] DELAMINATION IS PERMITTED UP TO 1.50 SQUARE INCH FOR EACH SQUARE FOOT OF PANEL AREA. DAMAGE MUST BE A MINIMUM OF 4D (EDGE TO EDGE) FROM OTHER DAMAGE, A HOLE, OR EDGE OF THE MATERIAL. FOR DELAMINATION ON THE EDGE, REFER TO NOTES [A] AND [R].

[L] REMOVE EDGE DAMAGE AS SHOWN IN DETAILS III AND VIII. FOR CRACKS NOT ON AN EDGE, A LENGTH UP TO 0.50 INCH IS PERMITTED. DAMAGE MUST BE A MINIMUM OF 6.0 INCHES FROM OTHER DAMAGE AND A MINIMUM OF 2.0 INCHES FROM A HOLE OR THE MATERIAL EDGE. [A] [R]

[M] REFER TO THE IDENTIFICATION SECTION FOR THE APPLICABLE CONFIGURATION AND EFFECTIVITIES.

[N] REMOVE EDGE CRUSHING DAMAGE AS SHOWN IN DETAILS III AND VII. REMOVE EDGE EROSION DAMAGE AS SHOWN IN DETAIL VIII.

[Q] AS AN OPTION TO SEALING WITH ALUMINUM FOIL TAPE, THE CHAMFER MAY BE REPAIRED WITHOUT THE REQUIREMENT FOR "A" CHECK INSPECTIONS AND A "C" CHECK REPAIR IF IT IS SEALED WITH BMS 5-92, TYPE I OR TYPE III ADHESIVE OR WITH BMS 5-123 ADHESIVE. CURE BMS 5-92, TYPE I OR TYPE III ADHESIVE AT 75°F (24°C) FOR 24 HOURS. CURE BMS 5-123 ADHESIVE AT 75°F (24°C) FOR 1 HOUR.

[R] EDGE DAMAGE TO A LENGTH OF 2 INCHES AND A DEPTH OF 0.5 INCH CAN BE SEALED AS FOLLOWS:

- APPLY ONE LAYER OF SPEED TAPE WHICH EXTENDS OUT 2 INCHES ALL AROUND THE DAMAGE
- APPLY A SECOND LAYER OF SPEED TAPE WHICH EXTENDS OUT 1 INCH ALL AROUND THE EDGES OF THE FIRST LAYER OF SPEED TAPE. [A]

THESE DAMAGE LOCATIONS MUST BE A MINIMUM OF 10 TIMES THE DAMAGE LENGTH (EDGE TO EDGE) FROM THE NEAREST HOLE OR OTHER DAMAGE LOCATIONS.

Wing Fixed Trailing Edge Skin Allowable Damage
Figure 4 (Sheet 4)

NOTES (CONT)

[S] DENTS ARE PERMITTED UP TO 1.50 SQUARE INCH WITHIN EACH SQUARE FOOT OF PANEL AREA. SEE DETAIL V. THE DAMAGE MUST NOT BE LESS THAN 4D (EDGE TO EDGE) FROM OTHER DAMAGE, A HOLE OR THE MATERIAL EDGE. IF THE DEPTH OF THE DENT IS GREATER THAN 0.05, DO ONE OF THESE PROCEDURES:

- FILL THE DENT WITH POTTING COMPOUND AS GIVEN IN SRM 51-40-1. SEAL THE AREA WITH ALUMINUM FOIL TAPE (SPEED TAPE) 3M-Y436 OR AN EQUIVALENT. KEEP A RECORD OF THE LOCATION WHERE THE SPEED TAPE IS INSTALLED. MAKE AN INSPECTION OF THAT LOCATION NO MORE THAN THE SUBSEQUENT "A" CHECK AFTER THE TAPE IS APPLIED.

[S] (CONT)

REPLACE THE TAPE IF IT STARTS TO COME OFF OR IF DETERIORATION IS FOUND. REPAIR THE DAMAGE NO MORE THAN 1000 FLIGHT HOURS AFTER THE TAPE IS APPLIED. IF THE DAMAGE BECOMES LARGER IN LESS THAN 1000 FLIGHT HOURS, REPAIR THE DAMAGE NO MORE THAN FIVE FLIGHTS AFTER THAT.

- REWORK THE DENT AS GIVEN IN SRM 51-40-1
- CUT OUT THE DENT AND REPAIR IT AS GIVEN IN SRM 51-40-5.

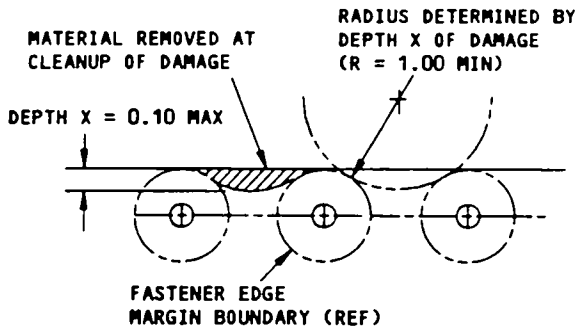

DAMAGE CLEANUP OF EDGES WHERE FASTENER EDGE MARGINS DO NOT OVERLAP

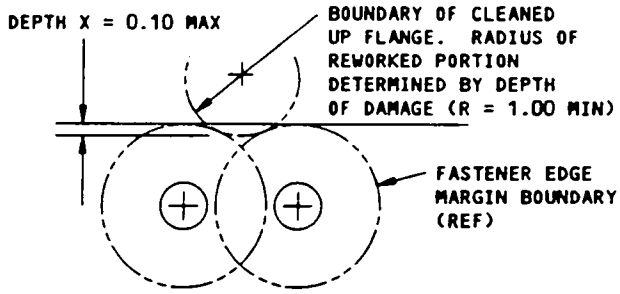

DAMAGE CLEANUP OF EDGES WHERE FASTENER EDGE MARGINS OVERLAP

DETAIL III

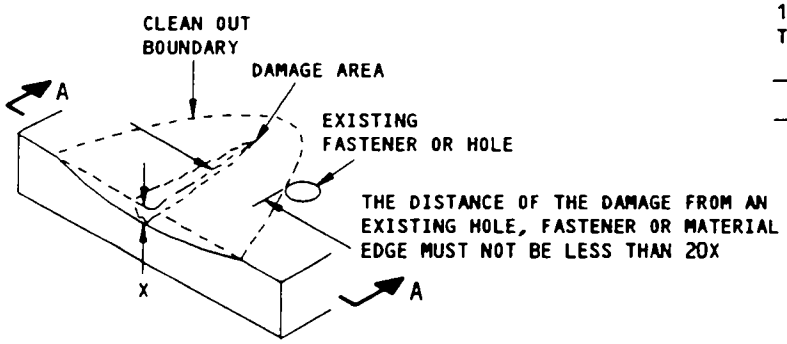

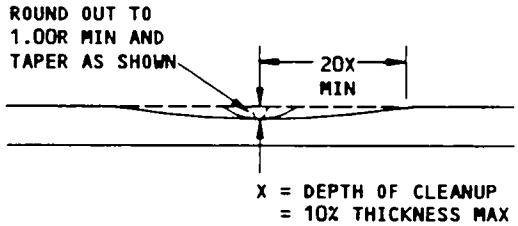

SECTION A-A

REMOVAL OF NICK, GOUGE, CORROSION, AND SCRATCH DAMAGE ON A SURFACE
DETAIL IV

Wing Fixed Trailing Edge Skin Allowable Damage
Figure 4 (Sheet 5)

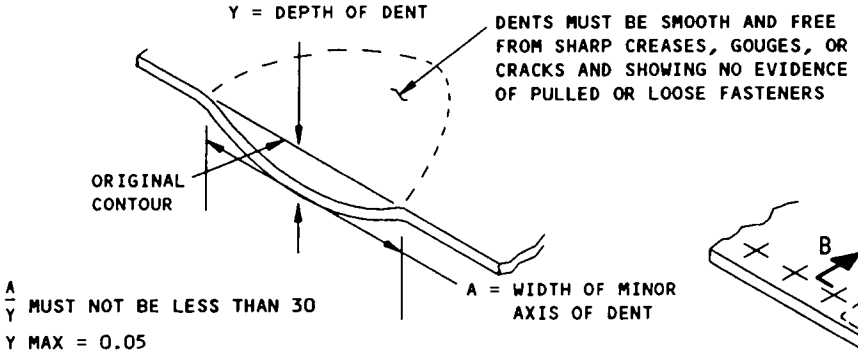

ALLOWABLE DAMAGE FOR DENT
DETAIL V

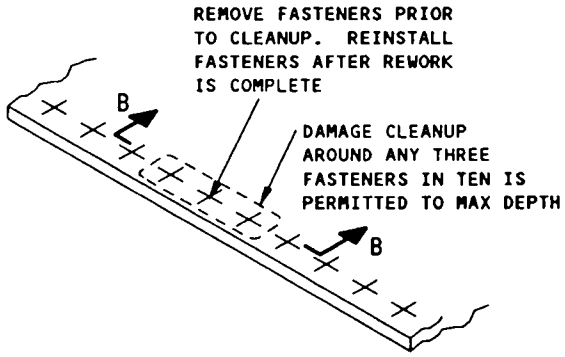

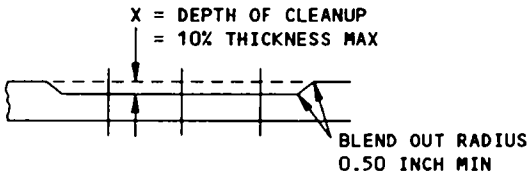

SECTION B-B
DAMAGE CLEANUP
DETAIL VI

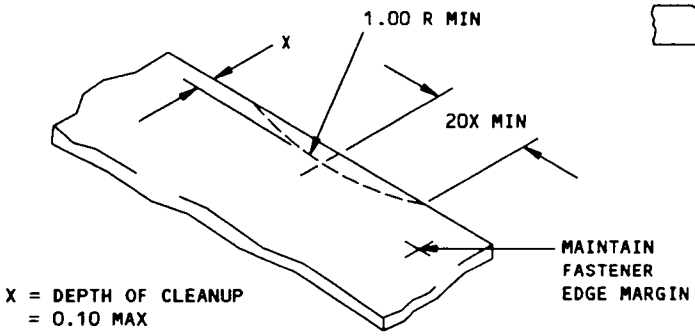

REMOVAL OF DAMAGE ON AN EDGE
DETAIL VII

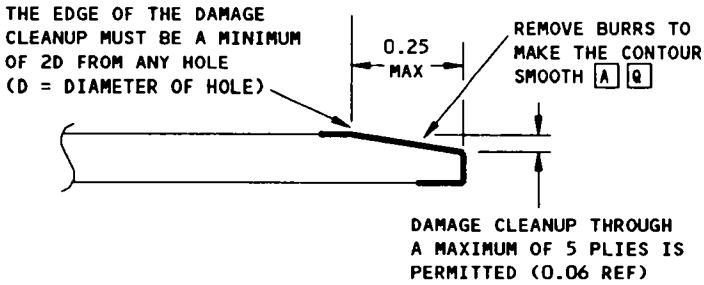

CLEANUP AND SEALING OF EDGE EROSION
DETAIL VIII

Wing Fixed Trailing Edge Skin Allowable Damage
Figure 4 (Sheet 6)

APPLICABILITY

THESE BLENDOUT AND FASTENER REPLACEMENT INSTRUCTIONS ARE APPLICABLE WHEN THERE IS DAMAGE AROUND FASTENER HOLE AREAS IN THE EXTERNAL SURFACE OF THE WING INSPAR SKINS.

WHEN YOU DO THE DAMAGE REMOVAL OR FASTENER REPLACEMENT PROCEDURES, REFER TO SRM 57-30-1, FIG. 1. FIG. 1 GIVES THE ALLOWABLE DAMAGE LIMITS OF THE WING INSPAR SKIN OF WBL 71.24

BLENDOUT INSTRUCTIONS

1. Remove the damage or corrosion from the skin. If there are steel fasteners in the corrosion area, remove them before you remove the damage or corrosion from the skin.

   CAUTION: DO NOT GRIND INTO A TITANIUM FASTENER. SMALL PARTICLES OF TITANIUM ARE FLAMMABLE. SAND INTO THE FASTENER MANUALLY OR WITH TOOLS. REFER TO PAR. 4. IN SRM 51-20-1.

2. See Table I for the maximum depth of material permitted to be removed from a fastener head.

   For aluminum rivets, sand or grind into the fastener head to remove the damage or corrosion around the fastener. For titanium fasteners, sand the fastener area to remove the damage or corrosion. See Detail I.

   Make the blendout area smooth to 125 microinches R_a or better.

3. Examine the area of the cleanup for remaining damage or corrosion. Do a 10x visual inspection to make sure the damage is removed from the surface. Do an ultrasonic inspection to make sure there is no damage under the surface. If:

   A. - All damage is removed.

   - The material removed from the fastener head is not more than the depth in Table I.

   Do the instructions in Procedure I.

   B. - There is remaining damage or corrosion, or

   - The material removed from the fastener head is more than the depth in Table I, or

   - The fastener is not listed in Table I.

   The fastener must be removed and replaced. Do the instructions in Procedure II.

PROCEDURE I

1. Shot peen the damage area.
2. Apply Alodine 600. Refer to SRM 51-10-2.
3. Apply one layer of BMS 10-79, Type III primer. Refer to SOPM 20-44-04.
4. Restore an aerodynamic surface:
   - Fill the area with BMS 5-95 sealant
   - Let the sealant cure
   - Apply one more layer of BMS 10-79, Type III primer over the sealant. Refer to SOPM 20-44-04
   - Apply one layer of BMS 10-100 to the upper skin. Apply BMS 5-95, Class F sealant plus BMS 10-60 protective enamel to the lower skin.

PROCEDURE II

WARNING: REMOVE THE FUEL FROM THE TANKS. SUPPLY THE TANK WITH A GOOD FLOW OF AIR. FUEL VAPORS ARE DANGEROUS AND EXPLOSIVE. REFER TO AMM 28-23-00.

1. Remove the fastener. [A]
2. Remove the damage or corrosion from around the fastener hole. Refer to Detail II or Detail III. Make the blendout area smooth to 125 microinches R_a or better. Refer to SRM 57-30-1, Fig. 1, for the allowable damage limits of the inspar skin.
3. Do a penetrant inspection to make sure the damage is removed from the surface. Do an ultrasonic inspection to make sure there is no damage under the surface.
4. Do a high frequency eddy current (HFEC) test around the fastener hole area and in the hole to make sure there are no cracks. Refer to NDT Part 6, 51-00-00. If there are signs of a crack in the hole, go to the Boeing Company for instructions.
5. Shot peen the damaged area.
6. Drill and countersink the fastener hole. [B] [C]
7. Apply Alodine 600 to the blendout area and countersink. Refer to SRM 51-10-2.
8. Apply one layer of BMS 10-79, Type III primer to the blendout area and the countersink. Refer to SOPM 20-44-04.

Wing Inspar Skin - Removal of Damage at a Fastener
Figure 5 (Sheet 1)

G25871

BLENDOUT INSTRUCTIONS (CONT)

PROCEDURE II (CONT)

9. Install the fastener wet with sealant and seal the collar. Refer to SRM 51-20-4.
10. Restore an aerodynamic surface:
    - Fill the area with BMS 5-95 sealant
    - Let the sealant cure
    - Apply one more layer of BMS 10-79, Type III primer over the sealant. Refer to SOPM 20-44-04
    - Apply one layer of BMS 10-100 to the upper skin. Apply BMS 5-95, Class F sealant plus BMS 10-60 protective enamel to the lower skin.

NOTES

- DAMAGE, SUCH AS BLENDOUTS, TRIMOUTS, OR DENTS:
  - THAT OCCUR TO A STRUCTURALLY SIGNIFICANT ITEM (SSI) GIVEN IN SRM 51-00-4, FIG. 3 AND,
  - THAT ARE WITHIN THE ALLOWABLE DAMAGE LIMITS OF THE BOEING SRM,

  DO NOT HAVE AN EFFECT ON THE DAMAGE TOLERANCE PROPERTIES OF THE SSI. THEREFORE, EXISTING SUPPLEMENTAL STRUCTURAL INSPECTION DOCUMENT (SSID) INSPECTION PROGRAMS REMAIN EFFECTIVE.
- THE NONDESTRUCTIVE INSPECTION (NDI) PROCEDURES SPECIFIED IN THE INSTRUCTIONS ARE BOEING RECOMMENDATIONS. THE OPERATOR MUST MAKE A DECISION, GIVEN THEIR EXPERIENCE, IF THESE PROCEDURES ARE APPLICABLE TO THE TYPE OF DAMAGE FOUND.
- ALL DIMENSIONS ARE IN INCHES, UNLESS GIVEN DIFFERENTLY.
- REFER TO AMM 28-23-00 FOR DEFUELING A FUEL TANK.
- REFER TO AMM 51-21 FOR INTERIOR AND EXTERIOR FINISHES.
- REFER TO AMM 51-21-131 FOR CORROSION CONTROL ON THE SKIN AND FASTENERS.
- REFER TO NDT MANUAL, PART 1, 51-04-00 FOR ULTRASONIC INSPECTION PROCEDURES.
- REFER TO NDT MANUAL, PART 6, 51-00-00 FOR THE EDDY CURRENT PROCEDURES.
- REFER TO SOPM 20-20-02 FOR PENETRANT INSPECTION PROCEDURES.
- REFER TO SOPM 20-44-04 FOR THE APPLICATION OF CORROSION RESISTANT PRIMER.
- REFER TO SRM 51-10-1 FOR DAMAGE CLASSIFICATION.
- REFER TO SRM 51-10-2 FOR PROTECTIVE TREATMENT OF METALLIC AND GRAPHITE MATERIALS.
- REFER TO SRM 51-10-8 FOR SHOT PEENING.
- REFER TO SRM 51-20-4 FOR REPAIR AND FASTENER SEALING.
- REFER TO SRM 51-70 FOR AERODYNAMIC SMOOTHNESS REQUIREMENTS.
- REFER TO SRM 51-30-2 FOR FASTENER INSTALLATION AND REMOVAL.
- REFER TO SRM 51-30-3 FOR FASTENER SUBSTITUTION.
- REFER TO SRM 51-30-5 FOR FASTENER HOLE SIZES.
- REFER TO SRM 51-30-9 FOR COLD WORKING OF HOLES.

[A] WHEN YOU REMOVE FASTENERS THAT ATTACH THE SKIN TO A STRUCTURE, DO AS FOLLOWS:
- DO NOT REMOVE MORE THAN 75% OF THE FASTENERS AT ONE TIME
- KEEP A MINIMUM OF ONE FASTENER, IN A ROW OF FOUR FASTENERS, IN POSITION.

[B] SEE TABLE II OR TABLE III FOR THE REPLACEMENT FASTENER. DO NOT USE TABLE III UNLESS THE REMAINING SKIN THICKNESS IS LESS THAN THE MINIMUM THICKNESS SHOWN IN TABLE II.

MAKE SURE ALL OF THE COUNTERSINK IS CLEANED UP. IF THE COUNTERSINK IS NOT CLEANED UP WITH THE FASTENER FROM TABLE II OR TABLE III, GO TO THE BOEING COMPANY FOR INSTRUCTIONS.

[C] COLD WORK ALL HOLES IN THE LOWER WING SKIN. USE THE HIGH INTERFERENCE COLD WORK METHOD. REFER TO SRM 51-30-9.

[D] DO NOT GRIND INTO THE HEAD OF A FASTENER THAT DOES NOT HAVE A REPLACEMENT GIVEN IN TABLE II.

[E] IF A FASTENER IS NOT LISTED, GO TO THE BOEING COMPANY. THE BOEING COMPANY WILL TELL YOU WHICH REPLACEMENT FASTENER TO USE.

[F] IF THE THICKNESS OF THE SKIN AT THE FASTENER AFTER CLEANUP IS LESS THAN THE MINIMUM SHOWN, DO AS FOLLOWS:
- FOR AN INITIAL ALUMINUM RIVET WITH A 30° TO 82° COUNTERSINK, SEE TABLE III
- FOR THE OTHER FASTENERS GIVEN IN THE TABLE, GET INSTRUCTIONS FROM THE BOEING COMPANY.

[G] IF NECESSARY, USE A 1/32-INCH OVERSIZE HEX DRIVE BOLT AS AN ALTERNATIVE TO A 1/64-INCH OVERSIZE HEX DRIVE BOLT.

[H] IF THE SKIN THICKNESS AT THE FASTENER AFTER CLEANUP IS LESS THAN THE MINIMUMS SHOWN, GET INSTRUCTIONS FROM THE BOEING COMPANY.

Wing Inspar Skin - Removal of Damage at a Fastener
Figure 5 (Sheet 2)

BOEING PROPRIETARY - Copyright © - Unpublished Work - See title page for details.

INITIAL FASTENER	MAXIMUM DEPTH OF MATERIAL REMOVAL FROM A FASTENER HEAD (INCH) D			
	3/16 DIA	1/4 DIA	5/16 DIA	3/8 DIA
ALUMINUM RIVET WITH 82°/30° OR MODIFIED 82° COUNTERSINK HEAD	0.01	0.02	0.02	0.02
BACB30VU()K() BACB30NW()K()	0.005	0.01	0.01	0.01
BACB30PT()K()	--	0.01	0.01	0.01

TABLE I

INITIAL FASTENER E	FASTENER DIA (INCH)	MINIMUM THICKNESS OF THE REMAINING SKIN (INCH) F	REPLACEMENT FASTENER G C
ALUMINUM RIVET WITH 82°/30° OR MODIFIED 82° COUNTERSINK HEAD	3/16	0.10	BACB30NY6K()Y BOLT WITH A BACC30AC6 COLLAR
	1/4	0.13	BACB30NY8K()Y BOLT WITH A BACC30AC8 COLLAR
	5/16	0.16	BACB30NY10K()Y BOLT WITH A BACC30AC10 COLLAR
	3/8	0.19	BACB30NY12K()Y BOLT WITH A BACC30AC12 COLLAR
BACB30NW()K() BOLT WITH A BACC30M COLLAR	3/16	0.08	BACB30NW6K()X BOLT WITH A BACC30M6 COLLAR
	1/4	0.09	BACB30NW8K()X BOLT WITH A BACC30M8 COLLAR
	5/16	0.10	BACB30NW10K()X BOLT WITH A BACC30M10 COLLAR
	3/8	0.11	BACB30NW12K()X BOLT WITH A BACC30M12 COLLAR
BACB30PT()K() BOLT WITH A BACN10WM NUT	1/4	0.09	BACB30NW8K()X BOLT WITH A BACC30AB8CY COLLAR
	5/16	0.10	BACB30NW10K()X BOLT WITH A BACC30AB10CY COLLAR
	3/8	0.11	BACB30NW12K()X BOLT WITH A BACC30AB12CY COLLAR

TABLE II

Wing Inspar Skin - Removal of Damage at a Fastener
Figure 5 (Sheet 3)

G25873

INITIAL FASTENER [E]	FASTENER DIA (INCH)	MINIMUM THICKNESS OF THE REMAINING SKIN (INCH) [H]	REPLACEMENT FASTENER [C]
ALUMINUM RIVET WITH 82°/30° OR MODIFIED 82° COUNTERSINK HEAD	3/16	0.08	BACB30NW6K()Y BOLT WITH A BACC30R6 COLLAR
	1/4	0.09	BACB30NW8K()Y BOLT WITH A BACC30R8 COLLAR
	5/16	0.10	BACB30NW10K()Y BOLT WITH A BACC30R10 COLLAR
	3/8	0.11	BACB30NW12K()Y BOLT WITH A BACC30R12 COLLAR

TABLE III

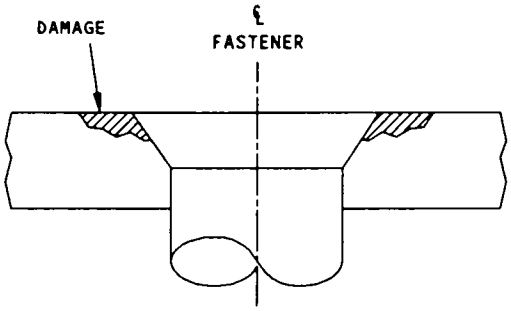

BEFORE DAMAGE IS REMOVED

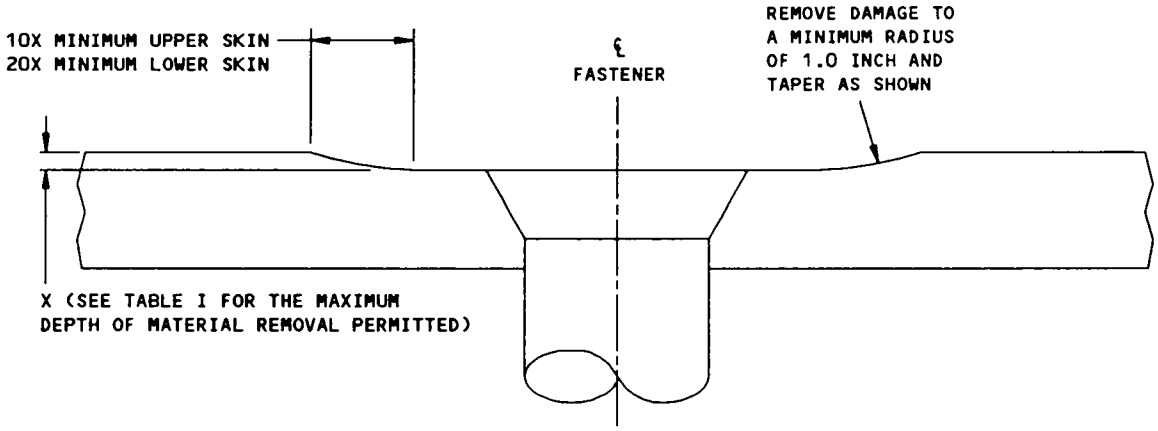

REMOVAL OF DAMAGE BY THE FASTENER-GRIND METHOD
DETAIL I

Wing Inspar Skin - Removal of Damage at a Fastener
Figure 5 (Sheet 4)

EXISTING FASTENER DIAMETER	FLAT DIAMETER	SPOTFACE TOOL NUMBER (REFER TO THE 737 ILLUSTRATED TOOL AND EQUIPMENT LIST, D6-17371)
1/4	0.44	150MIT65B00112
5/16	0.52	
3/8	0.61	

TABLE IV

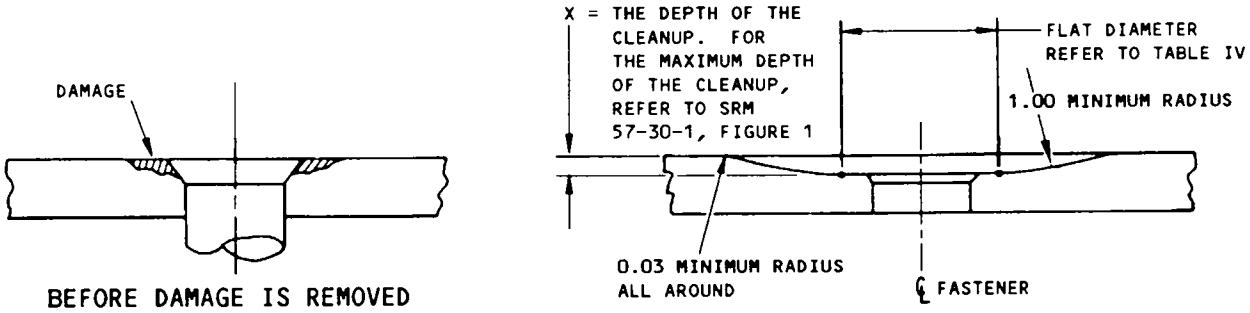

REMOVAL OF DAMAGE BY THE SPOTFACE TOOL METHOD

DETAIL II

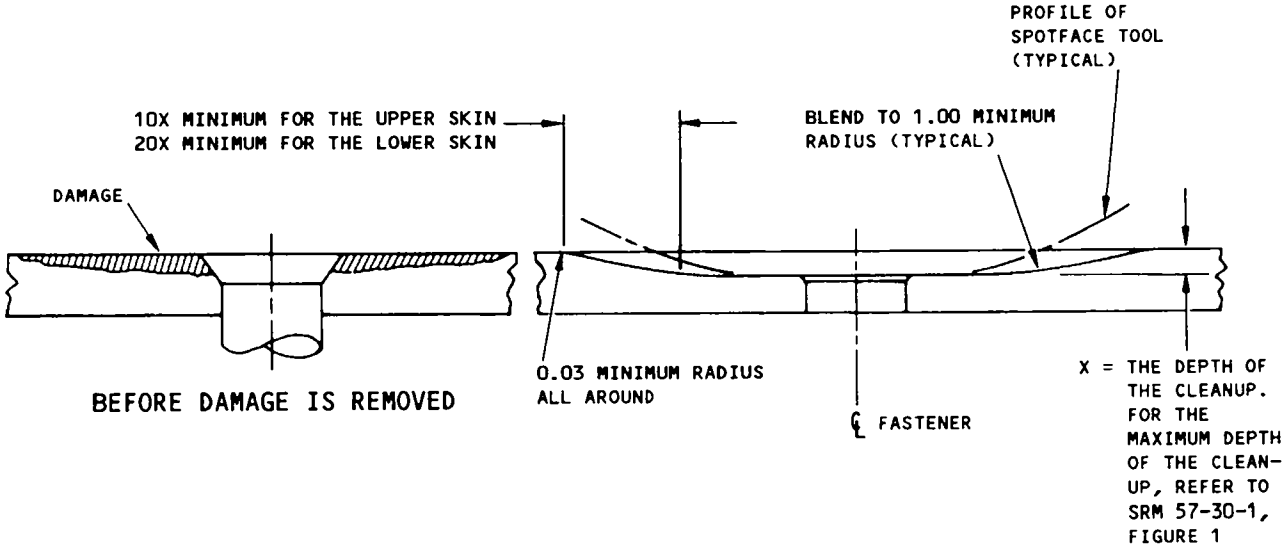

THIS DETAIL APPLIES TO DAMAGE THAT IS MORE THAN THE SPOTFACE TOOL CAN CLEAN UP. CLEAN UP THE DAMAGE AS SHOWN IN DETAIL II AND TABLE IV, AND BLEND OUT THE ADDITIONAL DAMAGE AS SHOWN IN THIS DETAIL.

DETAIL III

Wing Inspar Skin - Removal of Damage at a Fastener
Figure 5 (Sheet 5)

G25875

SUMMARY

This section will help you to locate, record, and evaluate the corrosion damage that you will find on the in-spar, upper wing skin, upper surface. This section can also help you to make a decision if the corrosion damage is permitted as given in Figure 1A or Figure 1B. If it is necessary to report damage to the Boeing Company use this section to help reduce the time necessary for Boeing to review the damage and provide a repair.

GENERAL

During normal airplane maintenance, inspect the in-spar upper wing skin, upper surface, for corrosion damage. Use the instructions in this section. If the corrosion damage is more than the allowable damage limits given in Figure 1A or Figure 1B, you can record and report the damage to Boeing. Boeing will perform a structural review of the damage. Use the Wing Skin Corrosion Data Form to report the corrosion damage. See Table II. Use the Wing Station Locator Map and Wing Station Zones to find the exact location of the damage. See Details II through VI.

OPERATOR ACTION

If you find corrosion on the in-spar upper wing skin, upper surface, follow the guidelines given below to accurately evaluate, record and report (if necessary) the subject damage.

1. Identify the possible corrosion locations on the in-spar upper wing skin, upper surface.
2. Remove the corrosion. See Detail I or refer to Figure 1A or Figure 1B.
3. Use the Wing Station Locator Map and Wing Station Zones Details II through VI to identify the wing stations common to the corrosion damage locations.
4. Show the corrosion locations on the applicable upper wing skin zones. See Details VII through XVI.
5. Complete the Upper Wing Skin Corrosion Data Form, Table II. Find if the damage is structurally satisfactory. Check if the damage is more than the allowable limits given in Figure 1A or Figure 1B. You will need to complete a Wing Skin Corrosion Data Form for each wing station. See the instructions given below.
6. If the blend-outs are more than the allowable damage limits given in Figure 1A or 1B, you can forward the Wing Skin Corrosion Data Form to Boeing for review.

INSTRUCTIONS TO FILL THE WING SKIN CORROSION DATA FORM, TABLE II

Complete a separate Wing Skin Corrosion Data Form for each Wing Station Zone that contains corrosion damage. Use individual sheets for each zone to simplify the calculations of the material area removed. Use the abbreviations given in Table I.

Column 1 Enter all corrosion data along individual wing station lines. Start at the corrosion location that is the most inboard. See Details II through VI to find the wing station lines.

NOTE: For more information Refer to Figure 1A, Sheet 3 and 6, or Figure 1B, sheet 8 and 9

Column 2 Determine the forward and aft location of each corrosion location.

Column 3 Measure the maximum depth of the blend.

NOTE: To find the maximum depth of the blend remove the damage to a minimum 1.0 inch radius. Blend out the damage, taper at a 10:1 ratio. See Detail I or refer to Figure 1A, Sheet 3, Detail I or Figure 1B, Sheet 7, Detail IV. Do not blend out the corrosion at 10:1 ratio until the maximum depth is found.

Column 4 Measure the Chord/Span wise dimensions of the blend-outs. See Detail I for the chord wise (d) dimension definition. The span wise dimension is measured perpendicular to the chord wise dimension at the centerline of the blend.

NOTE: Keep the blend-out size to a minimum so that a minimum amount of material is removed from the wing skin.

Column 5 Calculate and record the Individual Area removed, $Ai = (x)*(d/2)$. Record the individual area removed in column 5 of Table II.

Column 6 Calculate and record the Total Area Removed, $At = \Sigma(Ai)$

NOTE: Add the values listed in column 5 that have the same Wing Station number in column 1 to find the total area removed along a wing station line. For more information refer to Figure 1A, Sheet 6, or Figure 1B, Sheet 10.

Procedure to Locate, Record, Evaluate, and Report In-Spar Upper Wing Skin, Upper Surface Corrosion
Figure 6 (Sheet 1)

BOEING PROPRIETARY - Copyright © - Unpublished Work - See title page for details.

WING ASSEMBLY OR COMPONENT	ABBREVIATION	EXAMPLE
REAR SPAR	RS	
FRONT SPAR	FS	
STIFFENER LOCATION	S+ (+ IS THE STIFFENER NUMBER)	S3 HAS THE MEANING "STIFFENER 3"
BETWEEN STIFFENERS	S+–+ (+–+ HAS THE MEANING "BETWEEN STIFFENER ...AND STIFFENER"	S3–4 HAS THE MEANING "BETWEEN STIFFENER 3 AND 4"

NOTE: For more information on spar and stiffener skin region definitions, Refer to Figure 1B, Sheet 7.

TABLE I

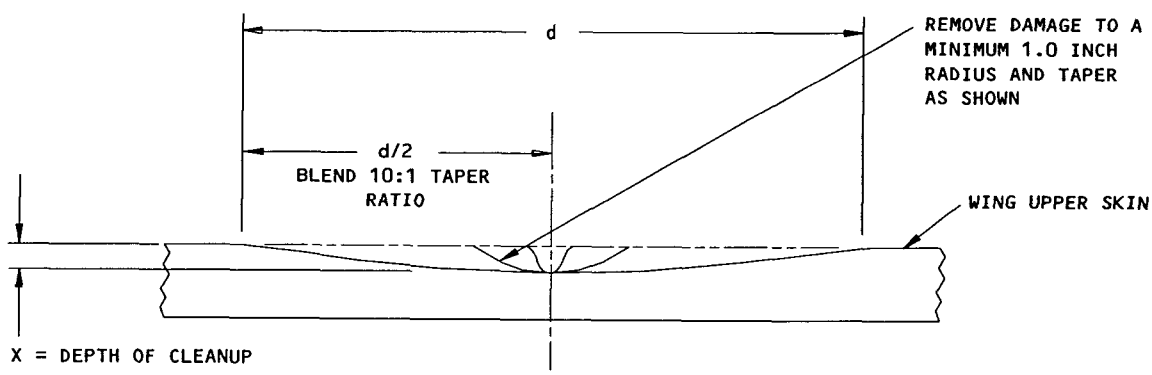

TYPICAL CROSS-SECTION OF A BLEND OUT
(CHORD WISE DIRECTION)
DETAIL I

FWD

Procedure to Locate, Record, Evaluate, and Report In-Spar Upper Wing Skin, Upper Surface Corrosion
Figure 6 (Sheet 2)

BOEING PROPRIETARY – Copyright © – Unpublished Work – See title page for details.

WING SKIN CORROSION DATA FORM

AIRPLANE INFO. MODEL | BASIC # VAR. # | SN

ZONE # [A] R.H. | L.H.

ITEM (1)	LOCATION (2) [C]		BLEND DIMENSIONS		INDIVIDUAL AREA REMOVED (CHORD WISE) Ai = (x)*(d/2) (5)	TOTAL FRONT TO REAR SPAR CHORD WISE AREA REMOVED At = Σ(Ai) [B] (6)
	W STA [D]	STIFF. NO. OR SPAR	MAX DEPTH (3)	CHORD/SPAN (4)		
1						
2						
3						
4						
5						
6						
7						
8						
9						
10						
11						
12						
13						
14						
15						
16						
17						
18						
19						
20						

NOTES

[A] SEE DETAIL II THROUGH VI OR REFER TO FIGURE 1A, SHEET 5 OR FIGURE 1B, SHEET 5

[B] REFER TO FIGURE 1A, SHEET 6 OR FIGURE 1B, SHEET 10

[C] FOR WING STATION (W STA) AND STIFFENER (STIFF), SEE DETAILS II THROUGH XVI

[D] RECORD CORROSION DATA ALONG WING STATION LINES, NOT ALONG STIFFENERS.

WING SKIN CORROSION DATA FORM
TABLE II

Procedure to Locate, Record, Evaluate, and Report In-Spar
Upper Wing Skin, Upper Surface Corrosion
Figure 6 (Sheet 3)

BOEING PROPRIETARY - Copyright © - Unpublished Work - See title page for details.

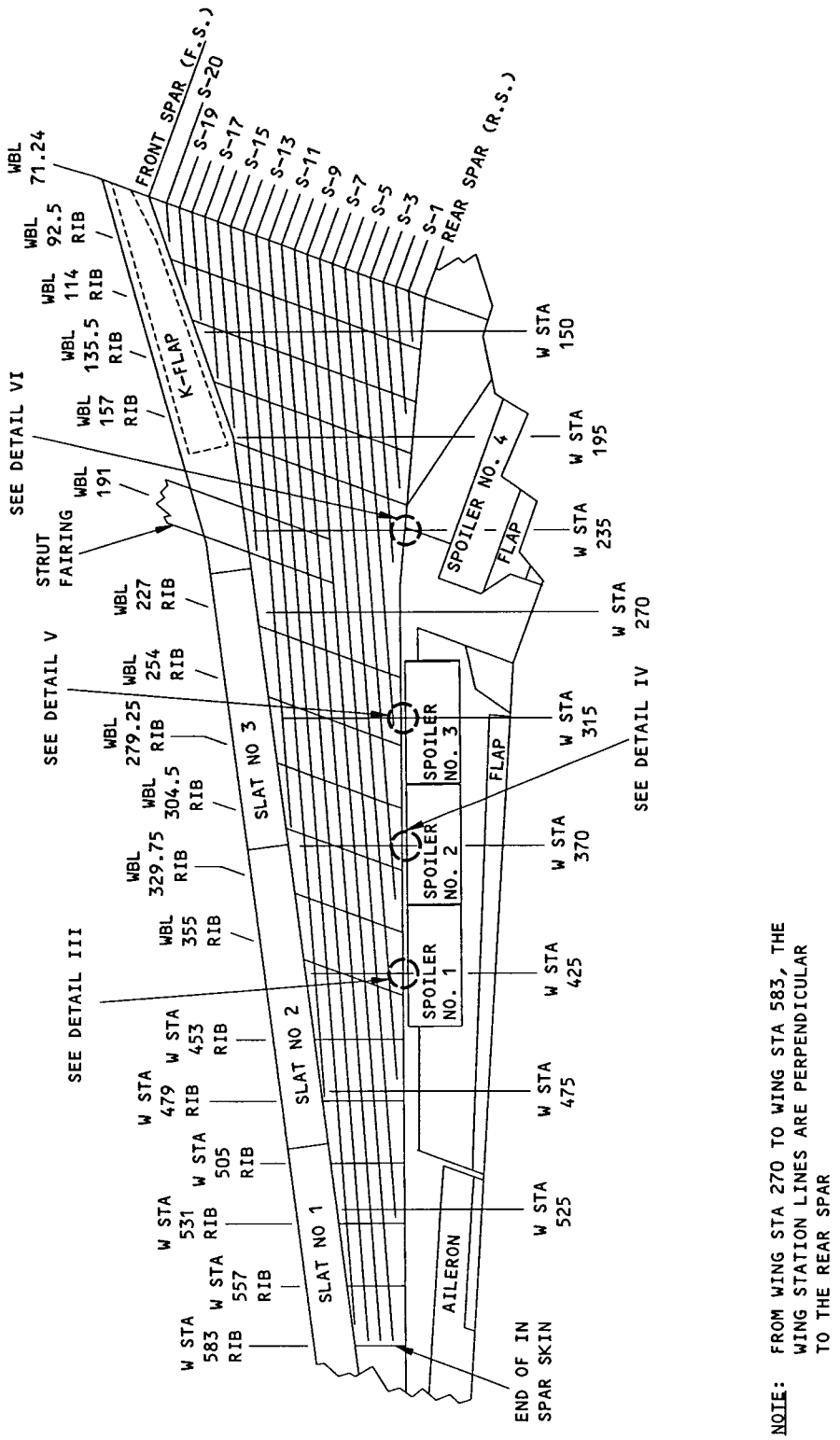

Procedure to Locate, Record, Evaluate, and Report In-Spar Upper Wing Skin, Upper Surface Corrosion
Figure 6 (Sheet 4)

BOEING PROPRIETARY - Copyright © - Unpublished Work - See title page for details.

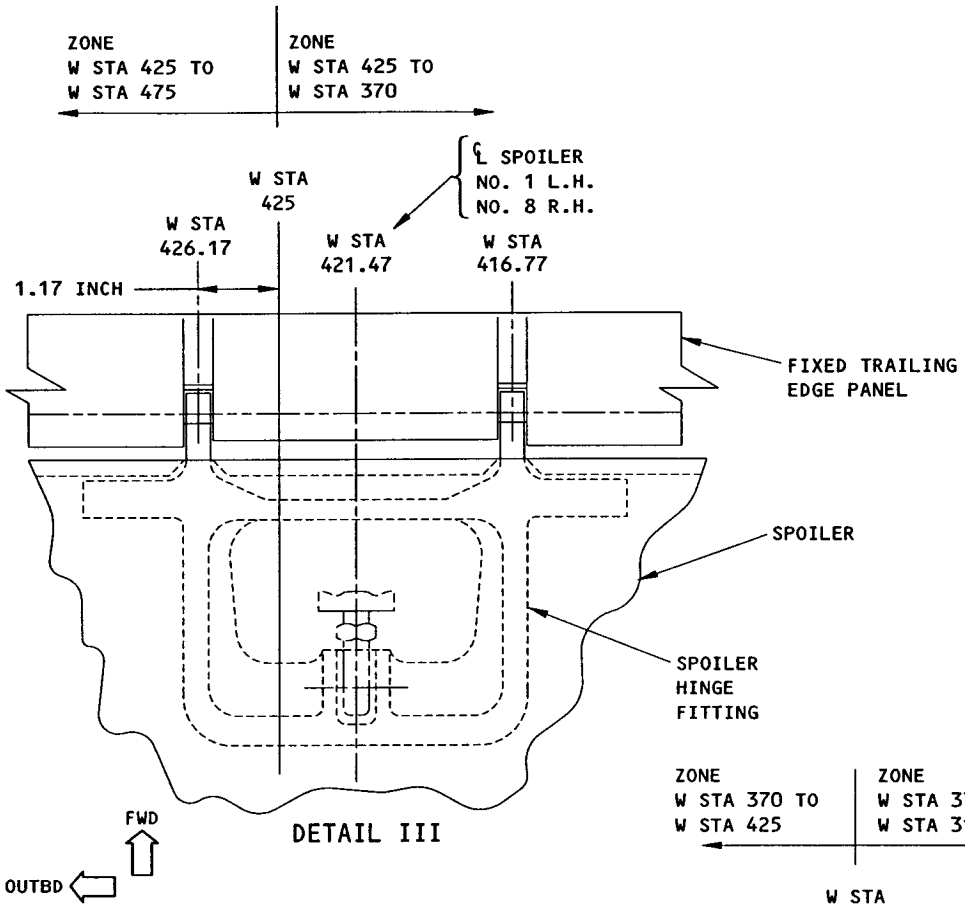

DETAIL III

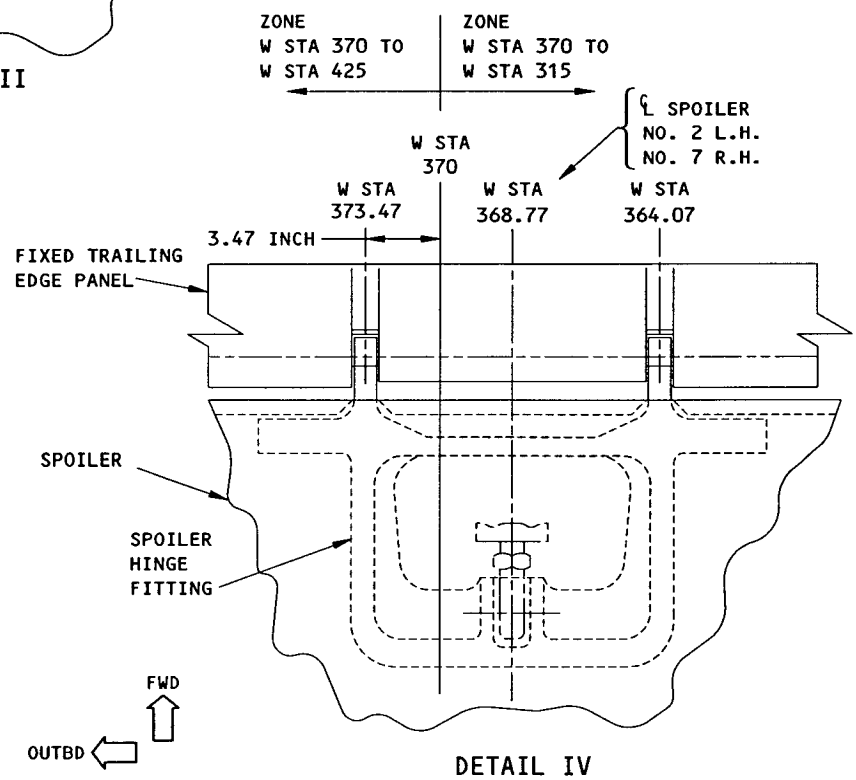

DETAIL IV

Procedure to Locate, Record, Evaluate, and Report In-Spar
Upper Wing Skin, Upper Surface Corrosion
Figure 6 (Sheet 5)

BOEING PROPRIETARY - Copyright © - Unpublished Work - See title page for details.

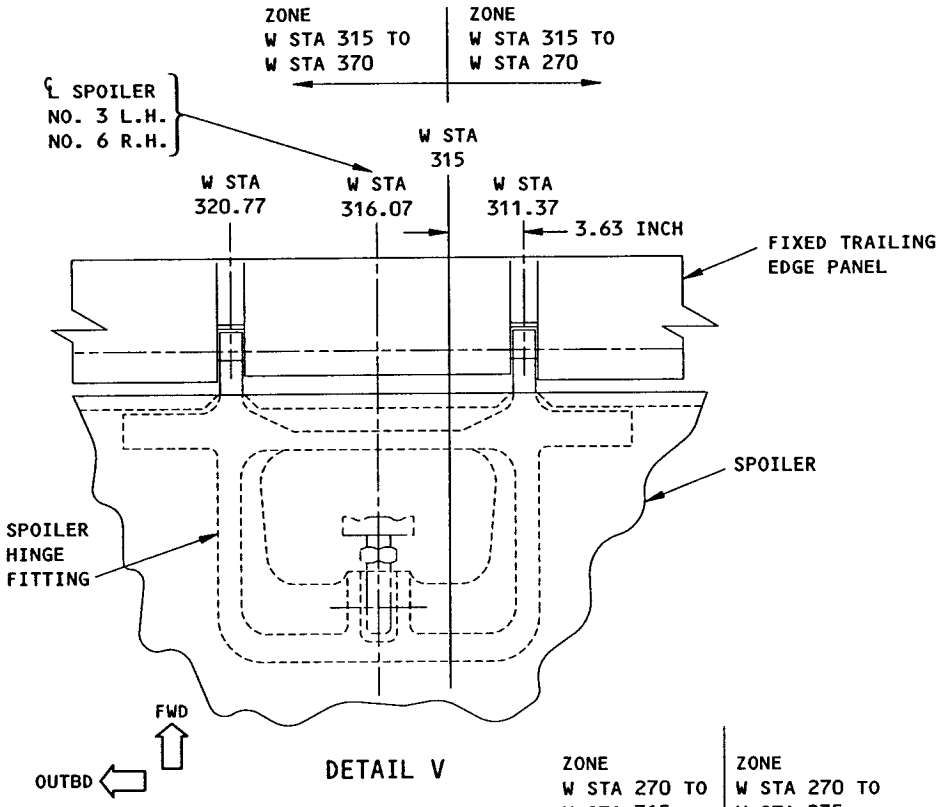

DETAIL V

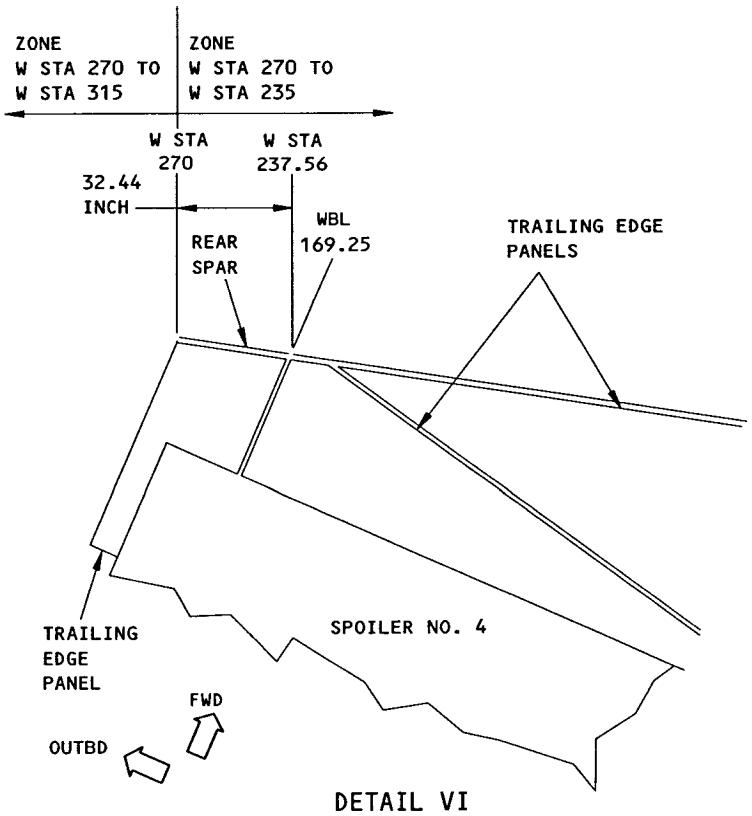

DETAIL VI

Procedure to Locate, Record, Evaluate, and Report In-Spar
Upper Wing Skin, Upper Surface Corrosion
Figure 6 (Sheet 6)

BOEING PROPRIETARY - Copyright © - Unpublished Work - See title page for details.

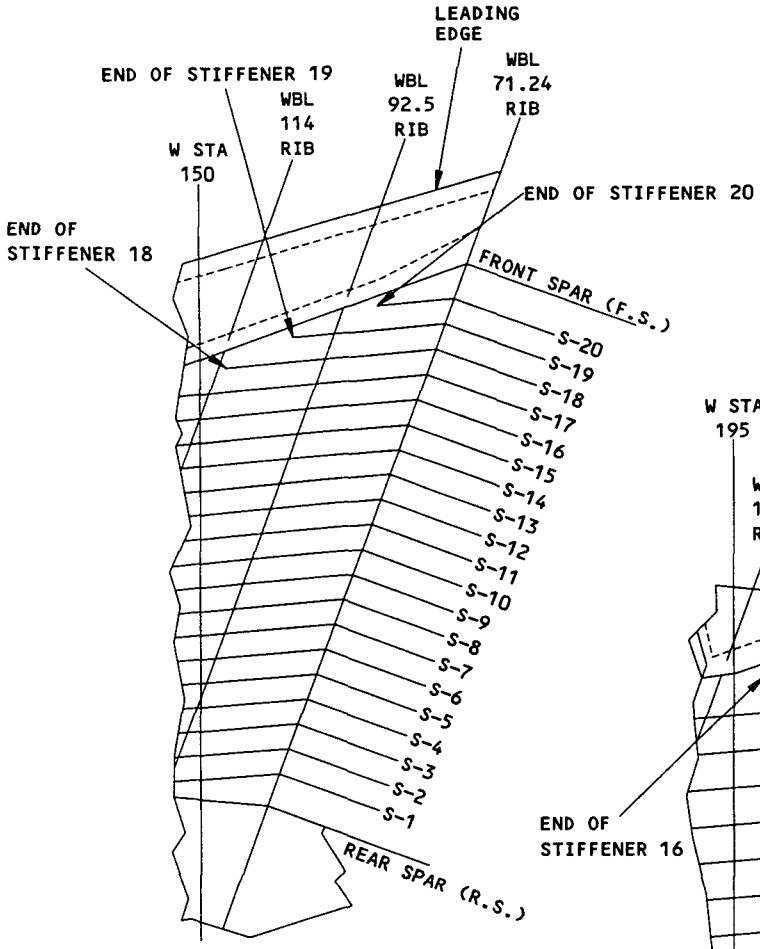

WING
INBOARD OF WS 150
DETAIL VII

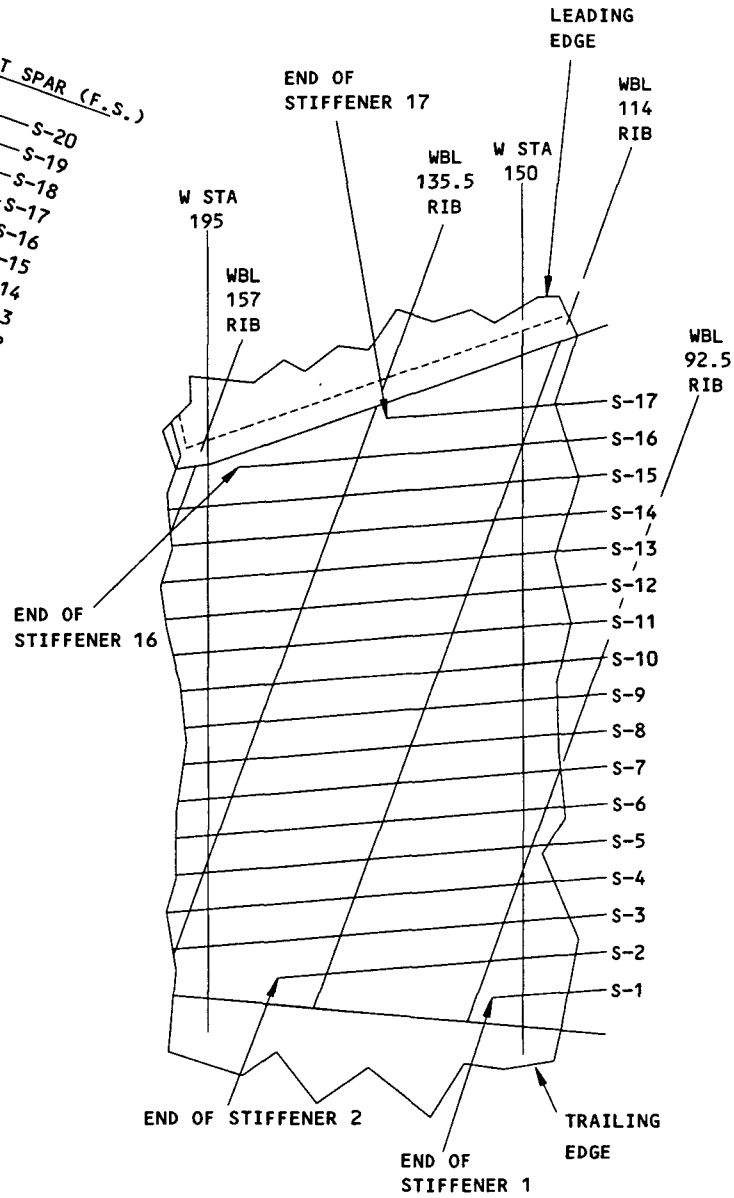

WING
FROM WS 150 TO WS 195
DETAIL VIII

Procedure to Locate, Record, Evaluate, and Report In-Spar
Upper Wing Skin, Upper Surface Corrosion
Figure 6 (Sheet 7)

BOEING PROPRIETARY - Copyright © - Unpublished Work - See title page for details.

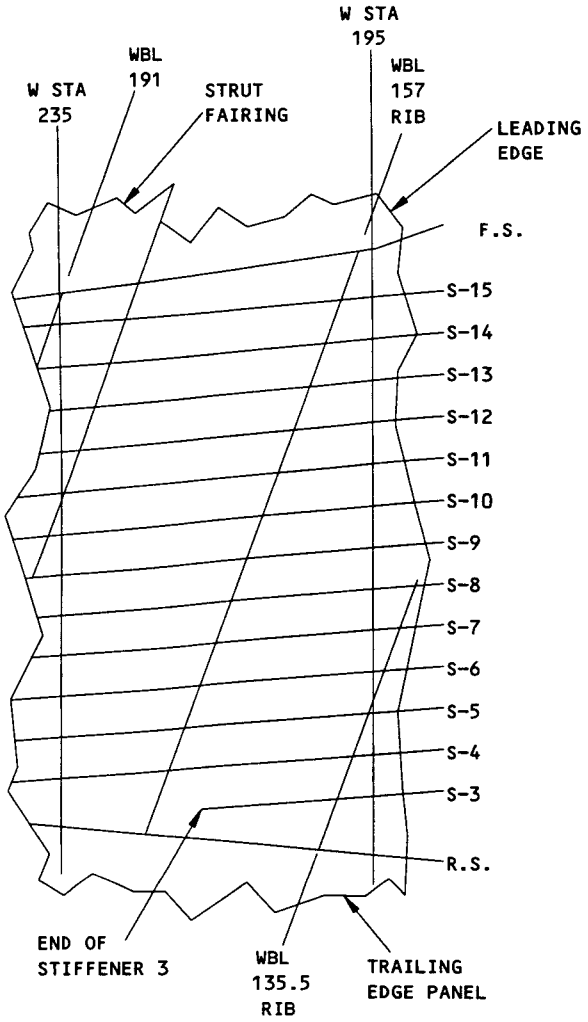

WING
FROM WS 195 TO WS 235
DETAIL IX

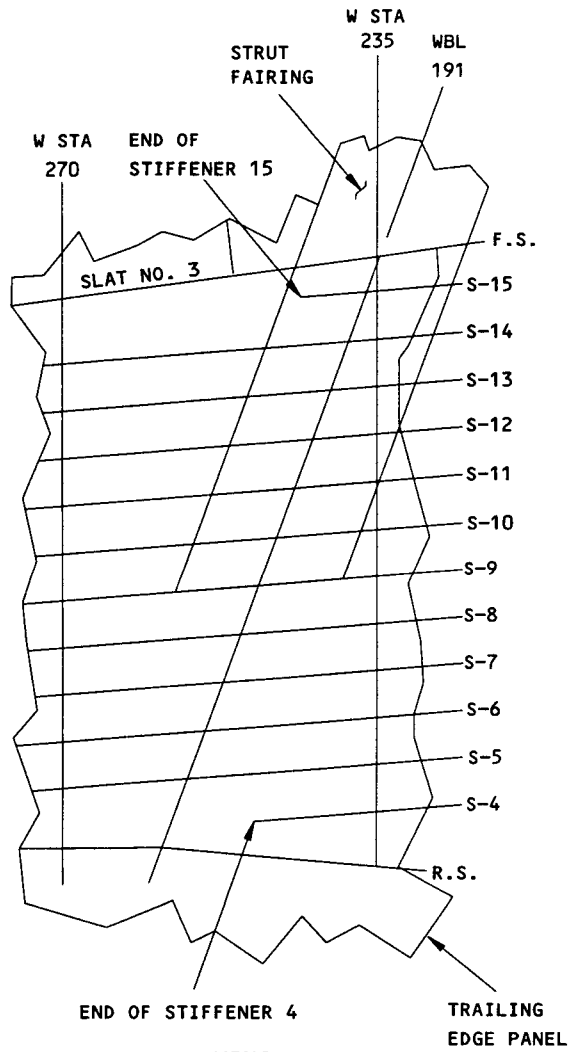

WING
FROM WS 235 TO WS 270
DETAIL X

Procedure to Locate, Record, Evaluate, and Report In-Spar
Upper Wing Skin, Upper Surface Corrosion
Figure 6 (Sheet 8)

BOEING PROPRIETARY - Copyright © - Unpublished Work - See title page for details.

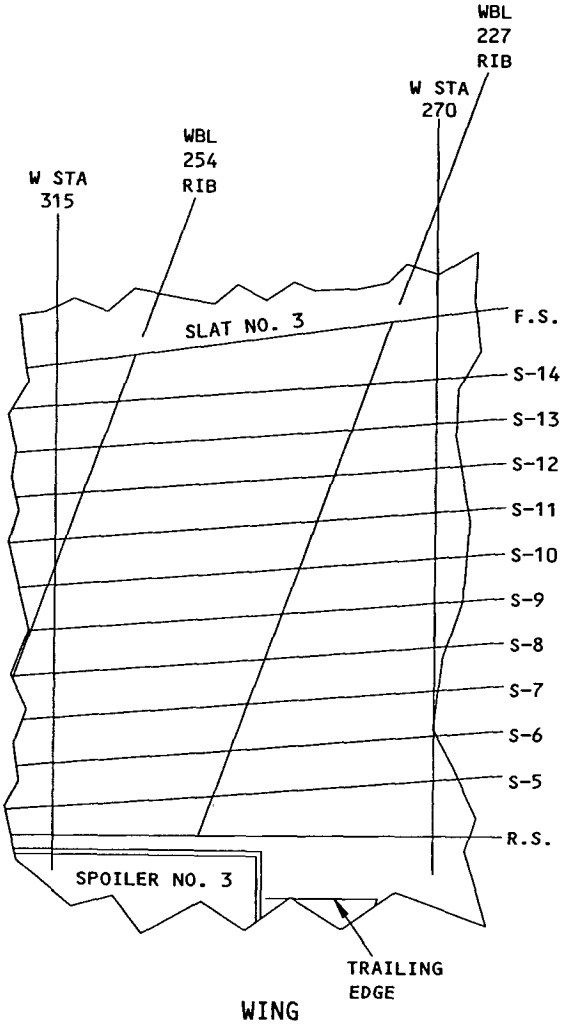

WING
FROM WS 270 TO WS 315
DETAIL XI

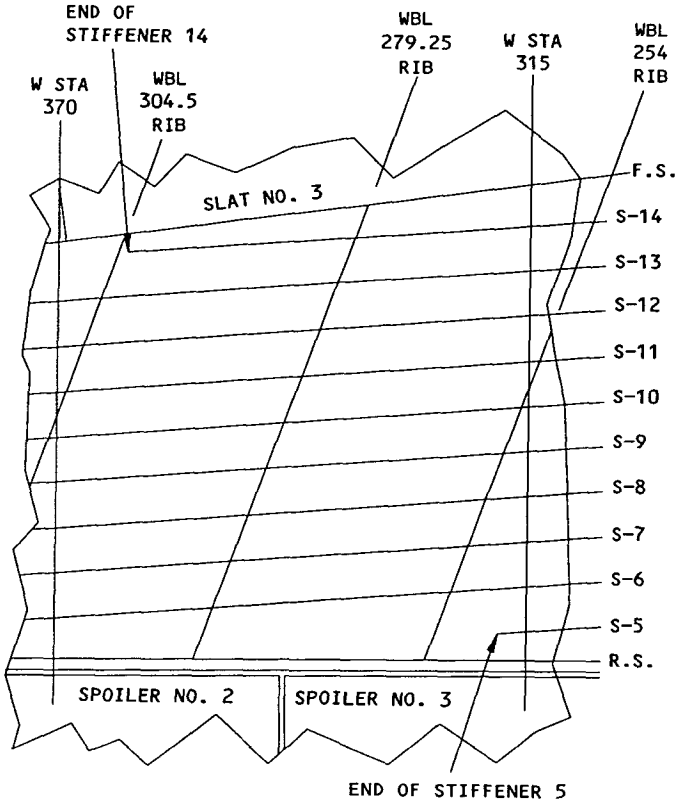

WING
FROM WS 315 TO WS 370
DETAIL XII

Procedure to Locate, Record, Evaluate, and Report In-Spar
Upper Wing Skin, Upper Surface Corrosion
Figure 6 (Sheet 9)

BOEING PROPRIETARY - Copyright © - Unpublished Work - See title page for details.

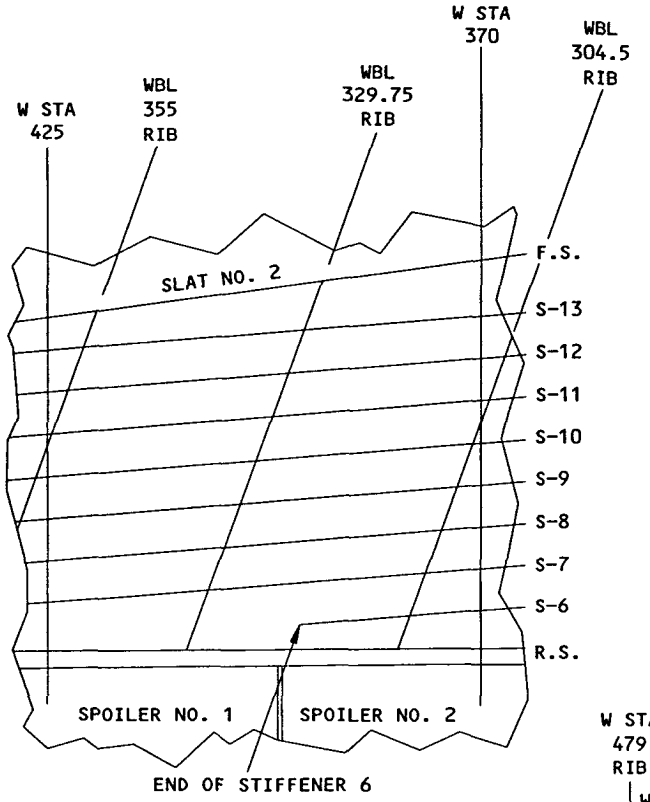

WING
FROM WS 370 TO WS 425
DETAIL XIII

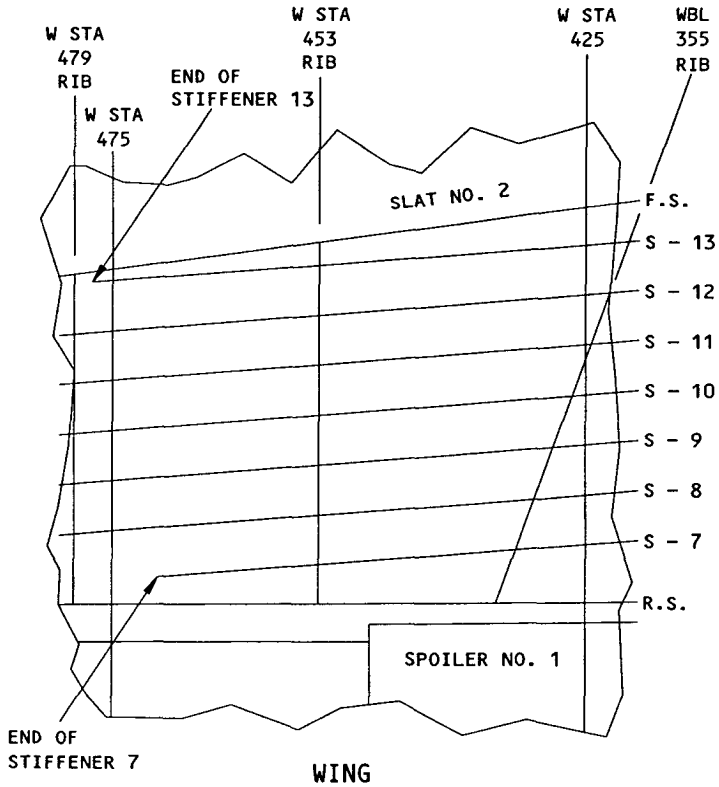

WING
FROM WS 425 TO WS 475
DETAIL XIV

Procedure to Locate, Record, Evaluate, and Report In-Spar
Upper Wing Skin, Upper Surface Corrosion
Figure 6 (Sheet 10)

BOEING PROPRIETARY - Copyright © - Unpublished Work - See title page for details.

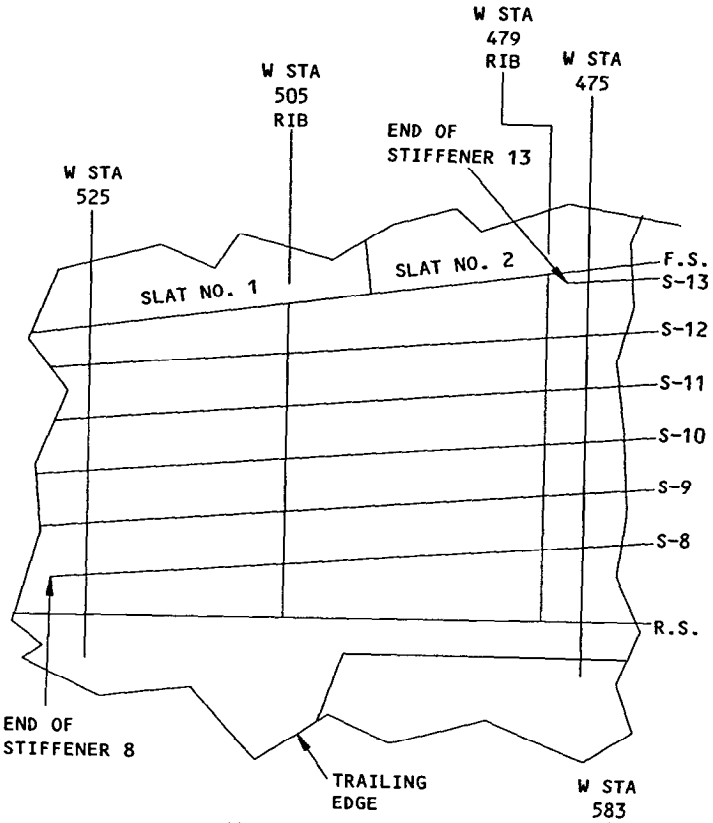

WING
FROM WS 475 TO WS 525
DETAIL XV

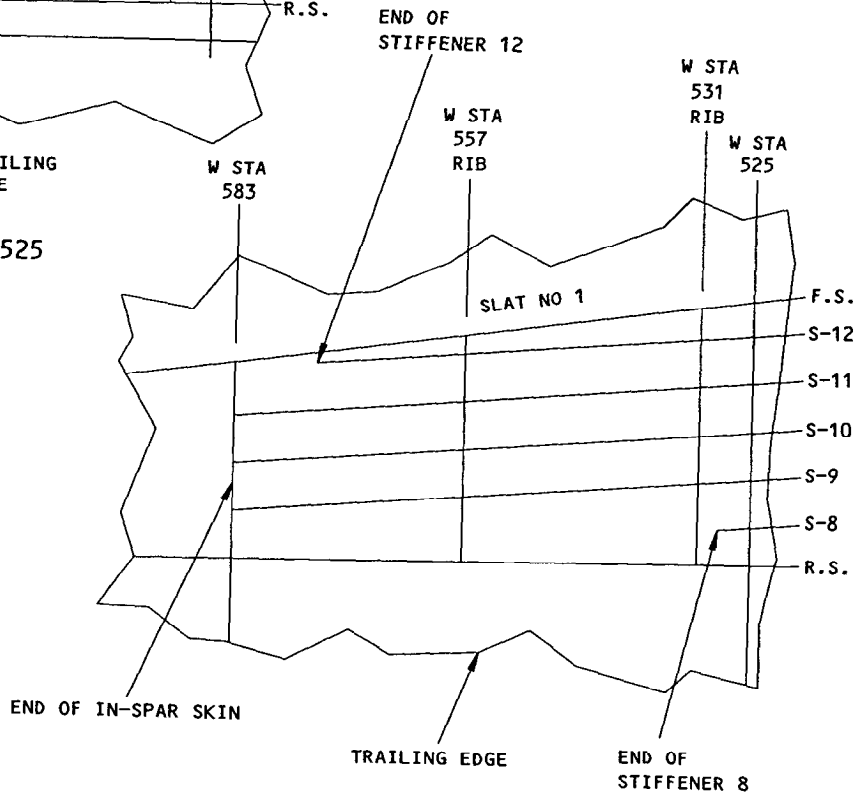

WING
FROM WS 525 TO WS 583
DETAIL XVI

Procedure to Locate, Record, Evaluate, and Report In-Spar Upper Wing Skin, Upper Surface Corrosion
Figure 6 (Sheet 11)

BOEING PROPRIETARY - Copyright © - Unpublished Work - See title page for details.

NOTES

- SKIN THICKNESS IS INDICATED BY DIMENSIONS WITHIN SPECIFIC BOUNDARIES. ARROWS AND DIMENSIONS INDICATE A CONSTANT TAPER IN SKIN THICKNESS BETWEEN BOUNDARIES. ALL DIMENSIONS ±0.005 INCH.

[A] DELETED

[B] DELETED

[C] DELETED

[D] FOR CUM LINE NUMBER 1 ONLY

[E] DELETED

[F] DELETED

[G] DELETED

[H] DELETED

[J] FOR CUM LINE NUMBERS: 2 THRU 5, 7

[K] FOR CUM LINE NUMBERS:
243, 244, 246, THRU 248, 250, 252, 253, 257 THRU 262, 264, 266, 267, 269 THRU 273, 275, 277, 279, 280, 282 THRU 285, 287, 291 THRU 293, 296, 323 THRU 325, 331, 374, 375, 380, 383 (BOEING REF: P0026-P0899, P2822-P3499, P7001-P7299, P8503-P8799)

[L] FOR CUM LINE NUMBER:
72, 84, 102, 110, 128, 143, 149, 155, 157, 158, 162, 164, 166, 173, 184, 194, 196, 199, 203, 205, 208, 212, 215, 217, 223, 225, 230, 234, 238, 242, 245, 249, 251, 254 THRU 256, 263, 265, 268, 274, 276, 278, 281, 286, 288 THRU 290, 294, 295, 297 THRU 322, 326, 328 THRU 330, 332 THRU 373, 376 THRU 379, 391, 382, 384 THRU 634, 637, 649 THRU 777, 779 THRU 879, 881 THRU 927, 929 THRU 950, 952 THRU 974, 976 THRU 994, 997 THRU 1000, 1002 THRU 1006, 1008 THRU 1014, 1016 THRU 1021, 1023, 1024, 1026 THRU 1029, 1031, 1033, 1035, 1038, 1039, 1041, 1042, 1044, 1045, 1046, 1047, 1049, 1050, 1051, 1053 THRU 1056, 1058 THRU 1062, 1064 THRU 1068, 1070 THRU 1072, 1074, 1075, 1077 THRU 1079, 1081, 1082, 1084 THRU 1086, 1088, 1089, 1091, 1093, 1095, 1097, 1099, 1102, 1105, 1109, 1113, 1117, 1120, 1135, 1143, 1151, 1154, 1155, 1165, 1167, 1176, 1178, 1186, 1189, 1194, 1197, 1199, 1203, 1223, 1226, 1236, 1241, 1245, 1256, 1257, 1261, 1262, 1265 THRU 1267, 1299, 1313, 1319, 1329, 1342, 1347, 1361, 1369, 1371, 1379, 1387, 1392, 1397, 1399, 1401, 1403, 1405, 1414, 1415, 1418, 1420, 1422, 1426, 1453, 1456, 1486 (BOEING REF: P4341-P4399, P4420-P4499, P4501-P5499, P8979-P9995)

[M] FOR CUM LINE NUMBERS:
6, 8 THRU 71, 73 THRU 83, 85 THRU 101, 103 THRU 109, 111 THRU 127, 129 THRU 142, 144 THRU 148, 150 THRU 154, 156, 159 THRU 161, 163, 165, 167 THRU 172, 174 THRU 183, 185 THRU 193, 195, 197, 198, 200 THRU 202, 204, 206, 207, 209 THRU 211, 213, 214, 216, 218 THRU 222, 224, 226 THRU 229, 231 THRU 233, 235 THRU 237, 239 THRU 241

[N] FORGINGS OF 7079-T6 MATERIAL HAVE BEEN REPLACED BY FORGINGS OF 7075-T73 IN PRODUCTION: 7075-T73 FORGINGS ARE RECOMMENDED WHEN EXISTING STOCKS OF 7079-T6 ARE EXHAUSTED

[O] FOR CUM LINE NUMBERS

[P] DELETED

[Q] DOES NOT INCLUDE 0.040 PAD

[R] DEPTH OF MACHINE CUT VARIES TO FAIR WITH LEADING EDGE SKIN

[S] FOR AIRPLANES WITH 125,000 LB MAX TAXI GROSS WEIGHT AND CUM LINE NUMBER 928

Wing Interspar Skin Identification
Figure 1 (Sheet 1)

[T] FOR CUM LINE NUMBERS:
1223, 1226, 1236, 1241, 1245, 1256, 1257, 1261, 1262, 1265 THRU 1267, 1299, 1313, 1319, 1329, 1342, 1347, 1361, 1369, 1371, 1379, 1387, 1392, 1397, 1399, 1401, 1403, 1405, 1414, 1415, 1418, 1420, 1422, 1424, 1426, 1453, 1456, 1486

[U] FOR CUM LINE NUMBERS:
72, 84, 102, 110, 128, 143, 149, 155, 157, 158, 162, 164, 166, 173, 184, 194, 196, 199, 203, 205, 208, 212, 215, 217, 223, 225, 230, 234, 238, 242, 245, 249, 251, 254 THRU 256, 263, 265, 268, 274, 276, 278, 281, 286, 288 THRU 290, 294, 295, 297 THRU 322, 326, 328 THRU 330, 332 THRU 373, 376 THRU 379, 382, 384 THRU 879, 881 THRU 927, 929 THRU 950, 952 THRU 974, 976 THRU 1000, 1002 THRU 1006, 1008 THRU 1014, 1016 THRU 1021, 1023, 1024, 1026 THRU 1029, 1031, 1033, 1035, 1038, 1039, 1041, 1042, 1044 THRU 1047, 1049, 1050, 1051, 1053 THRU 1056, 1058 THRU 1062, 1064 THRU 1068, 1070 THRU 1072, 1074, 1075, 1077 THRU 1079, 1081, 1082, 1084 THRU 1086, 1088, 1089, 1091, 1093, 1095, 1097, 1099, 1102, 1105, 1109, 1113, 1117, 1120, 1135, 1143, 1151, 1154, 1155, 1165, 1167, 1176, 1178, 1186, 1189, 1194, 1197, 1199, 1203, 1223, 1226, 1236, 1241, 1245, 1256, 1257, 1261, 1262, 1265 THRU 1267, 1299, 1313, 1319, 1329, 1342, 1347, 1361, 1369, 1371, 1379, 1387, 1392, 1397, 1399, 1401, 1403, 1405, 1414, 1418, 1420, 1422, 1424, 1426, 1453, 1456, 1486, 1523, 1530, 1565, 1579, 1581, 1583, 1585

Wing Inspar Skin Identification
Figure 1 (Sheet 2)

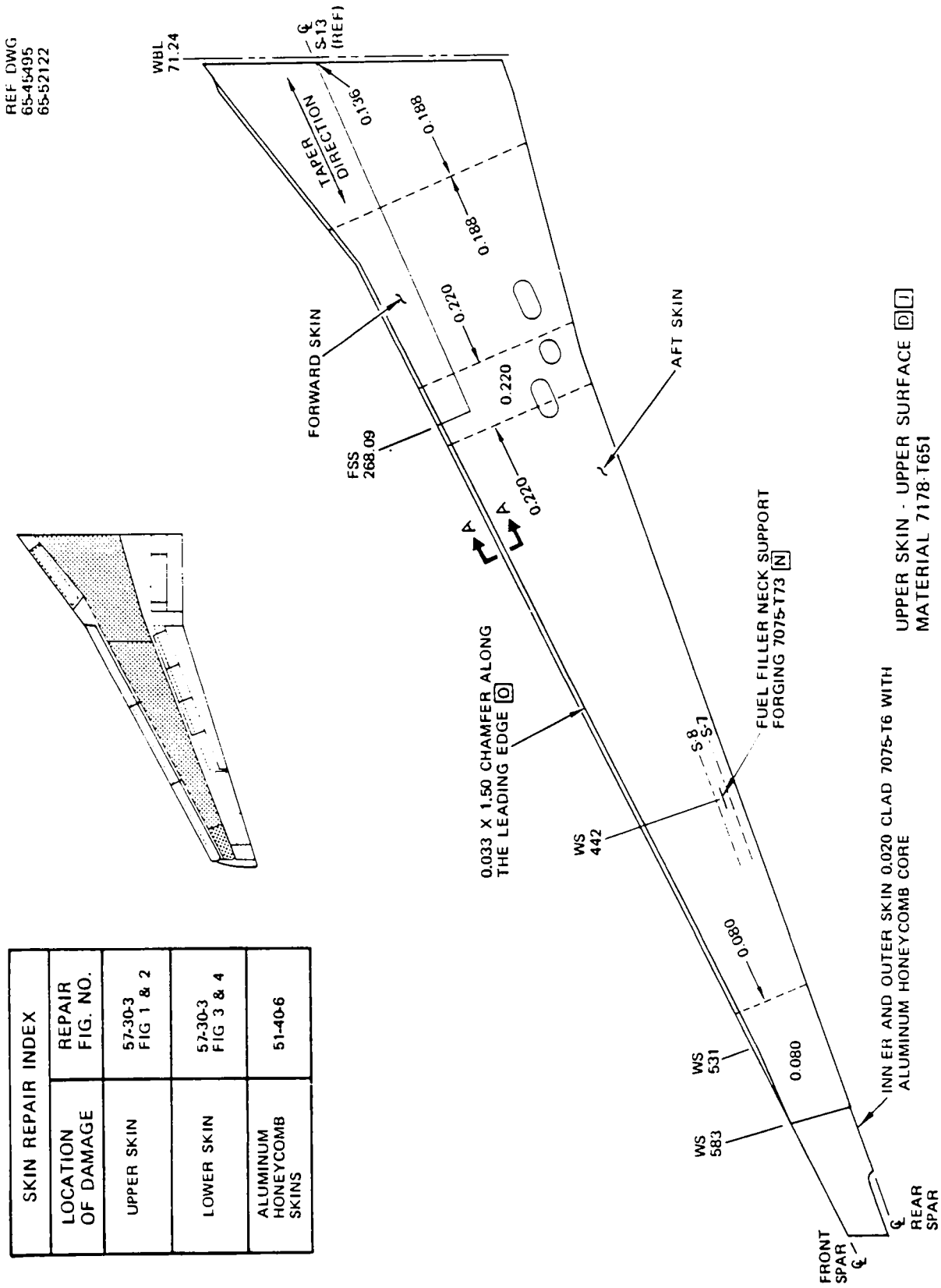

SKIN REPAIR INDEX	
LOCATION OF DAMAGE	REPAIR FIG. NO.
UPPER SKIN	57-30-3 FIG 1 & 2
LOWER SKIN	57-30-3 FIG 3 & 4
ALUMINUM HONEYCOMB SKINS	51-40-6

Wing Interspar Skin Identification
Figure 1 (Sheet 3)

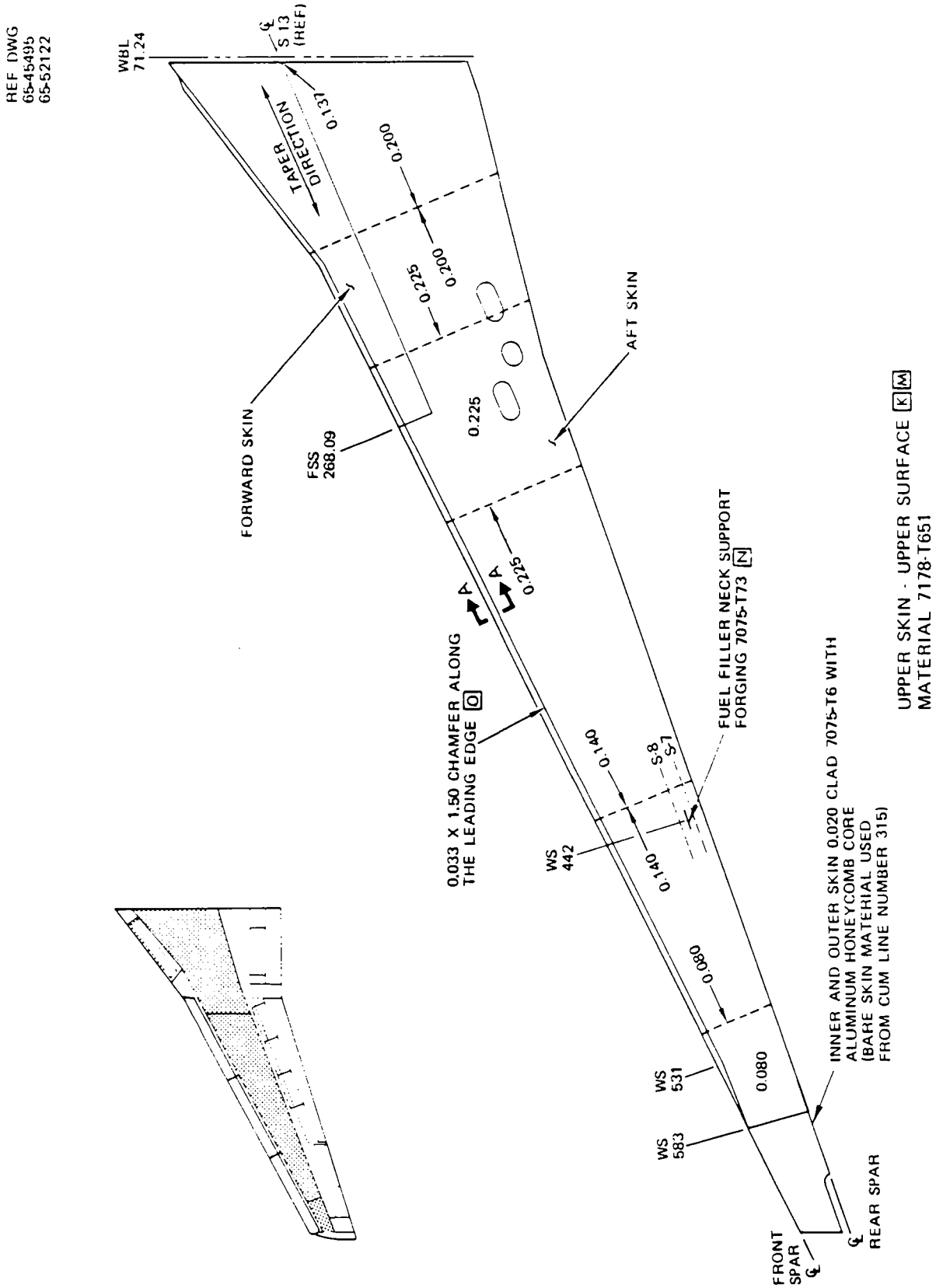

Wing Interspar Skin Identification
Figure 1 (Sheet 4)

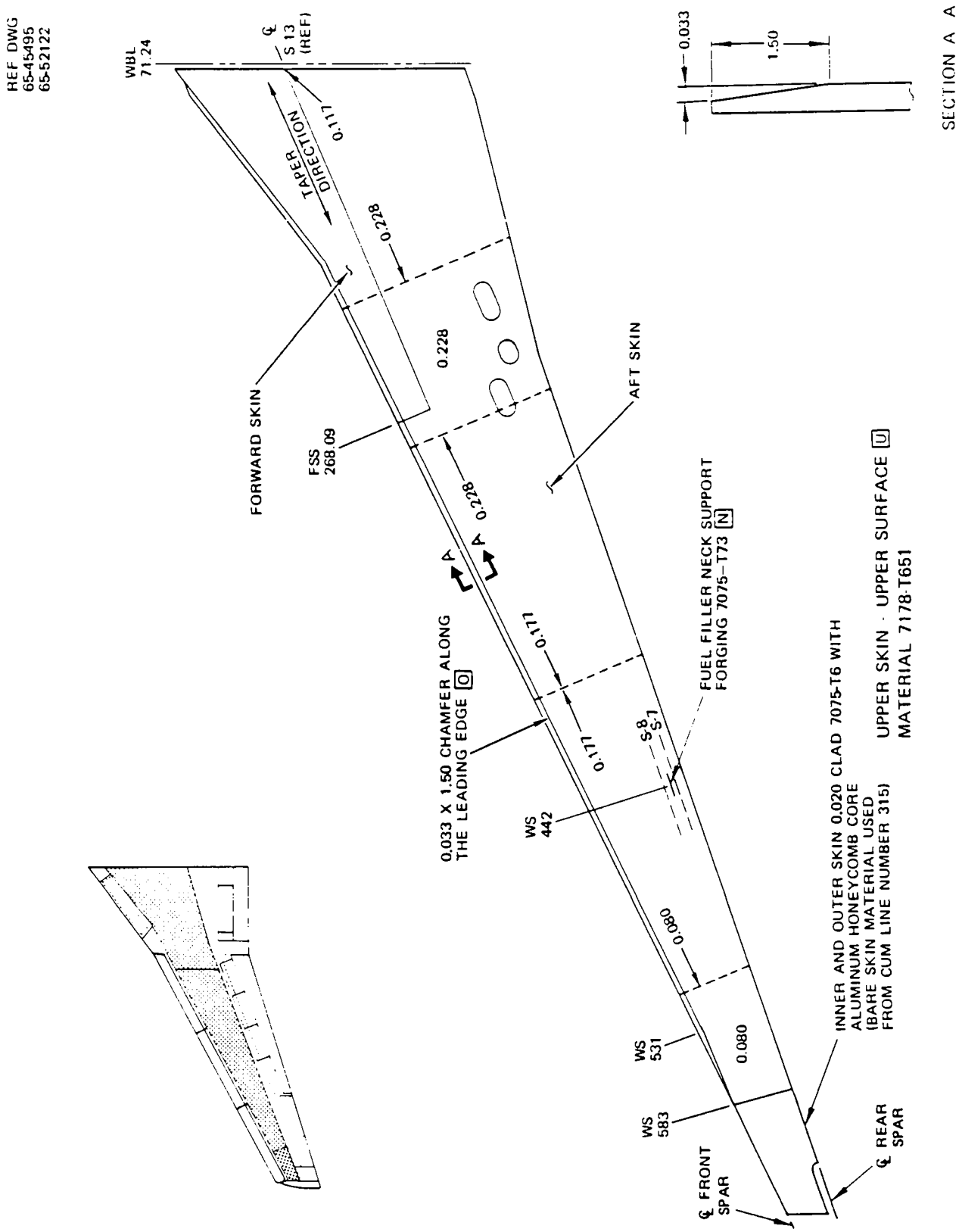

Wing Interspar Skin Identification
Figure 1 (Sheet 5)

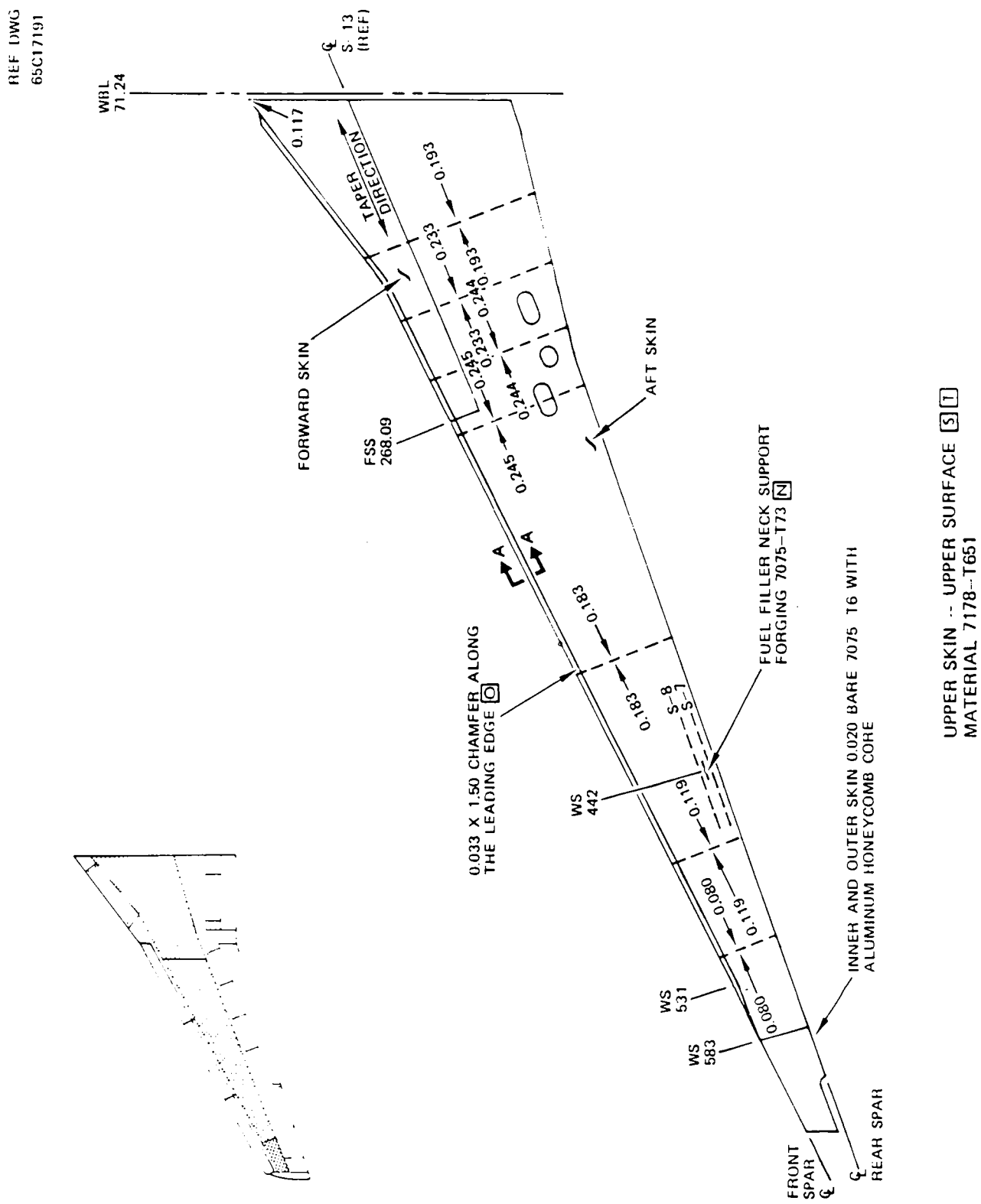

Wing Interspar Skin Identification
Figure 1 (Sheet 6)

REF DWG
65-45498

LOWER SKIN - UPPER SURFACE [D][J]
MATERIAL 2024-T351

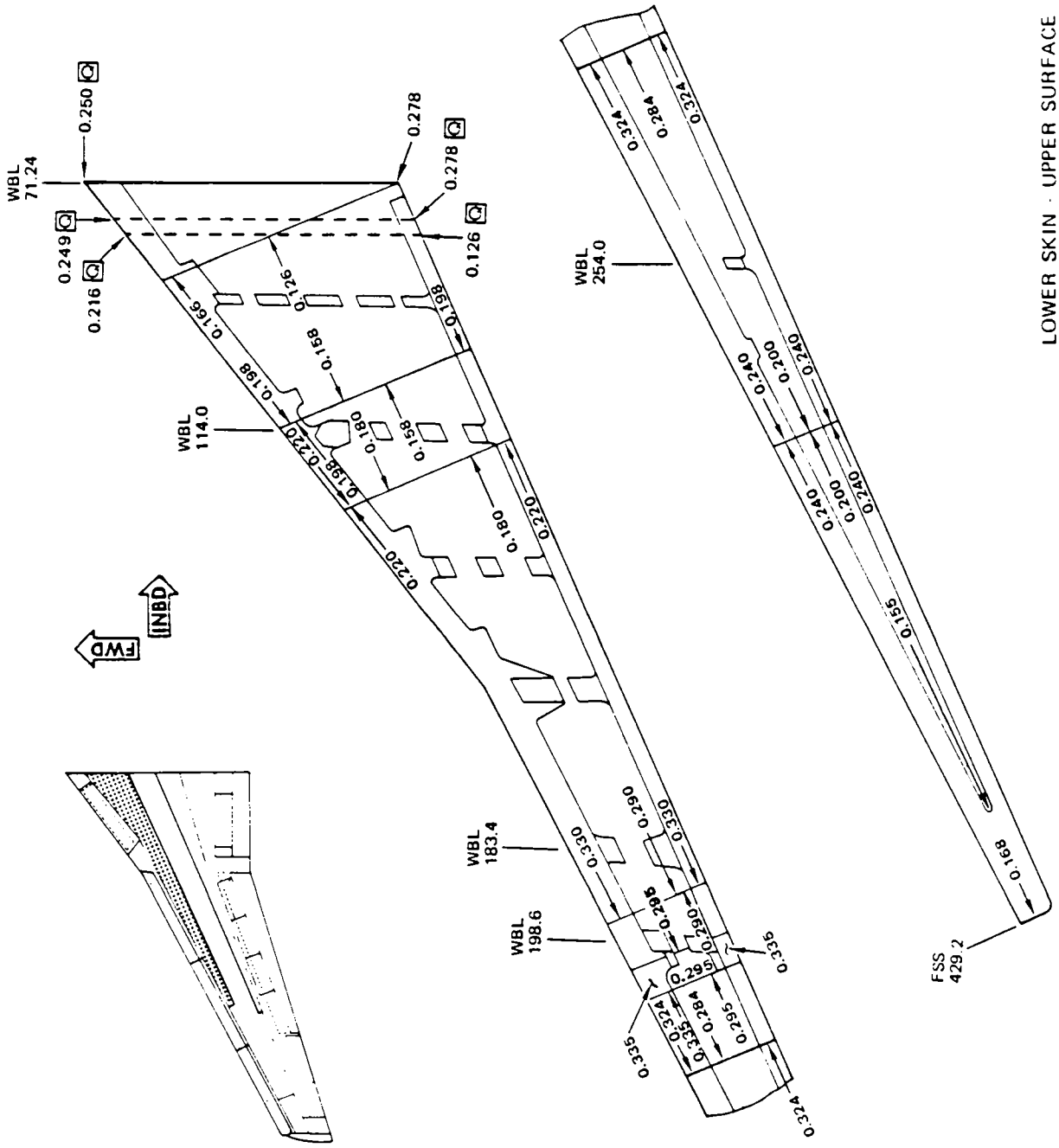

Wing Interspar Skin Identification
Figure 1 (Sheet 7)

REF DWG
65-45498

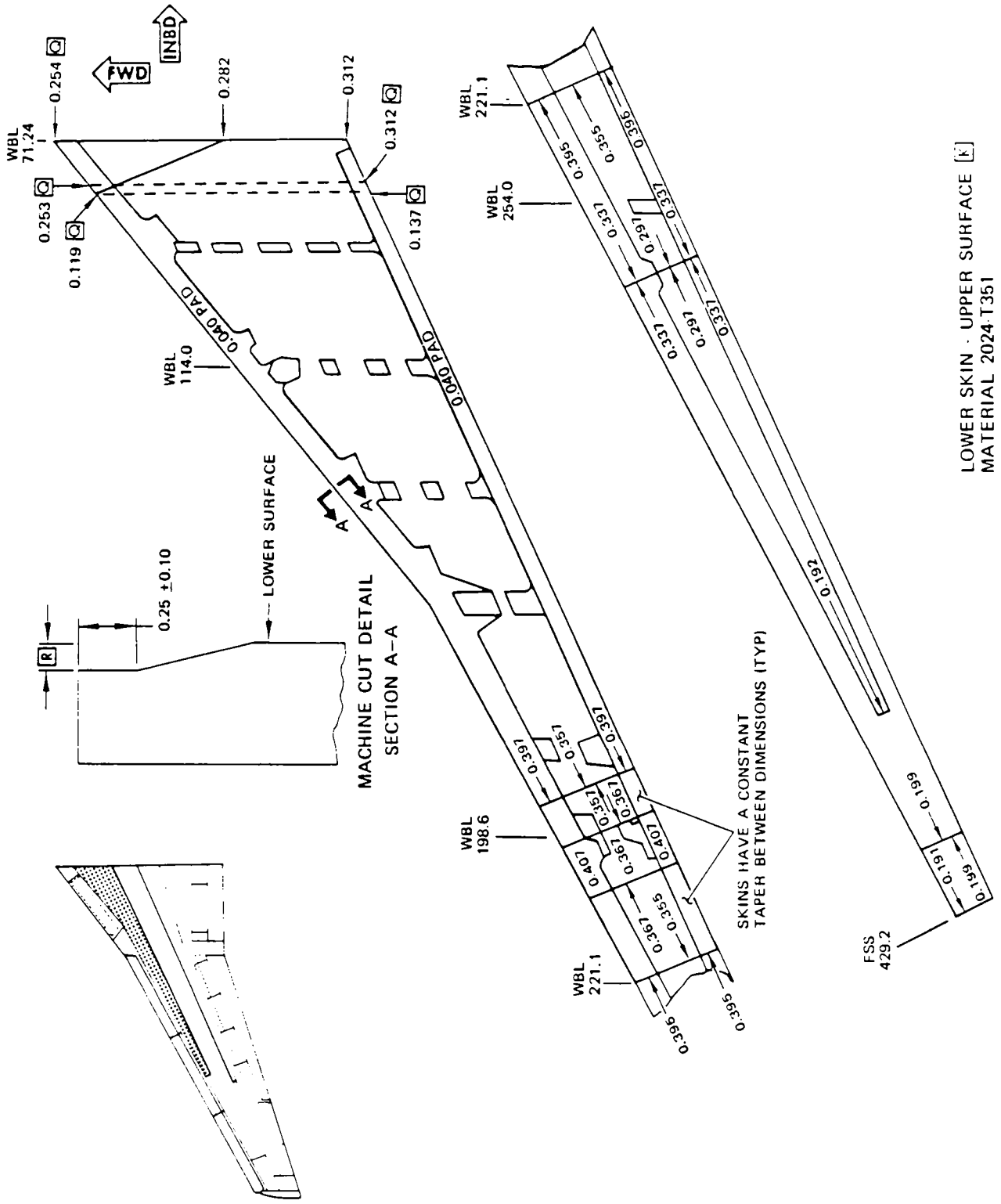

Wing Interspar Skin Identification
Figure 1 (Sheet 8)

REF DWG
65-45498

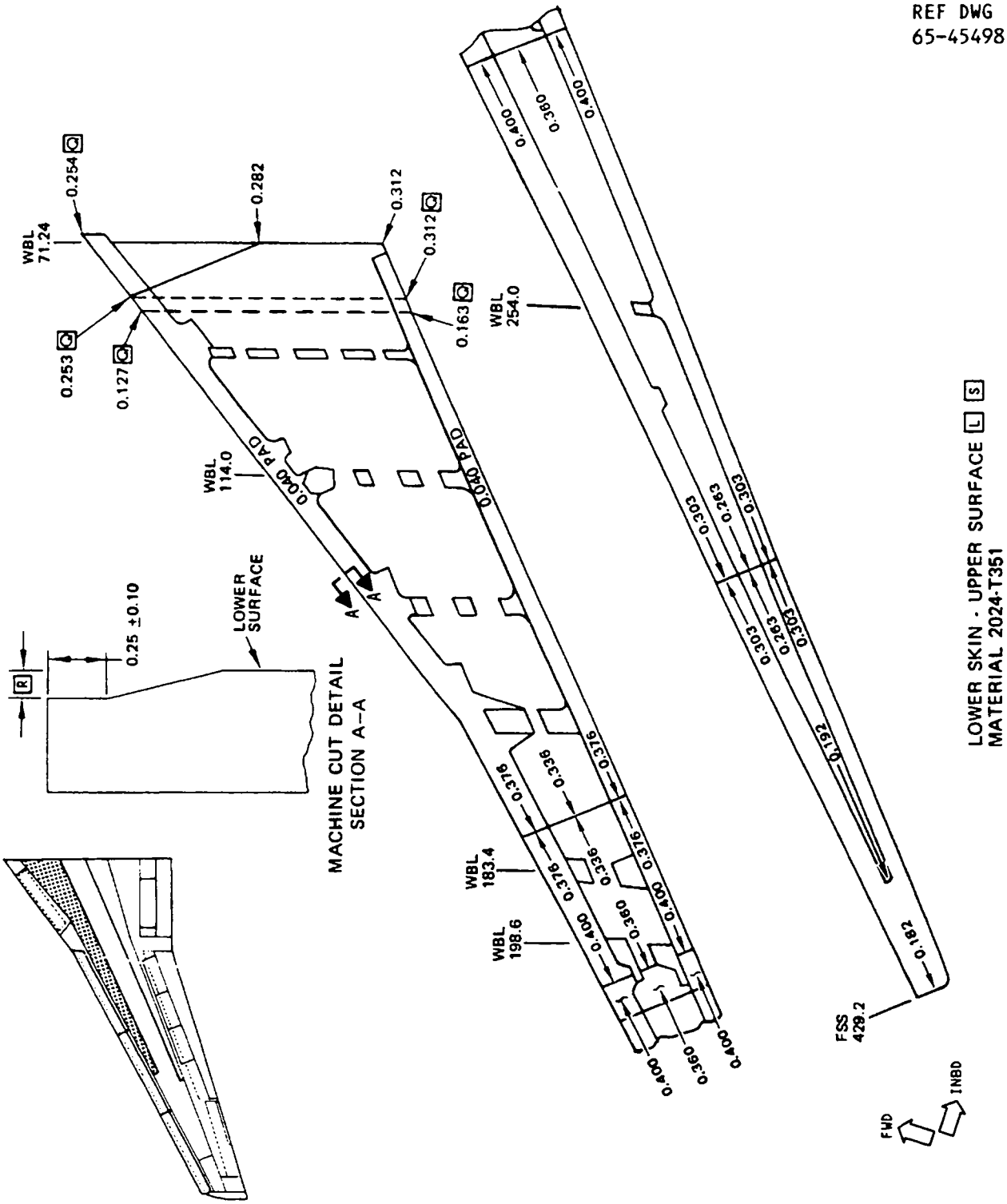

Wing Interspar Skin Identification
Figure 1 (Sheet 9)

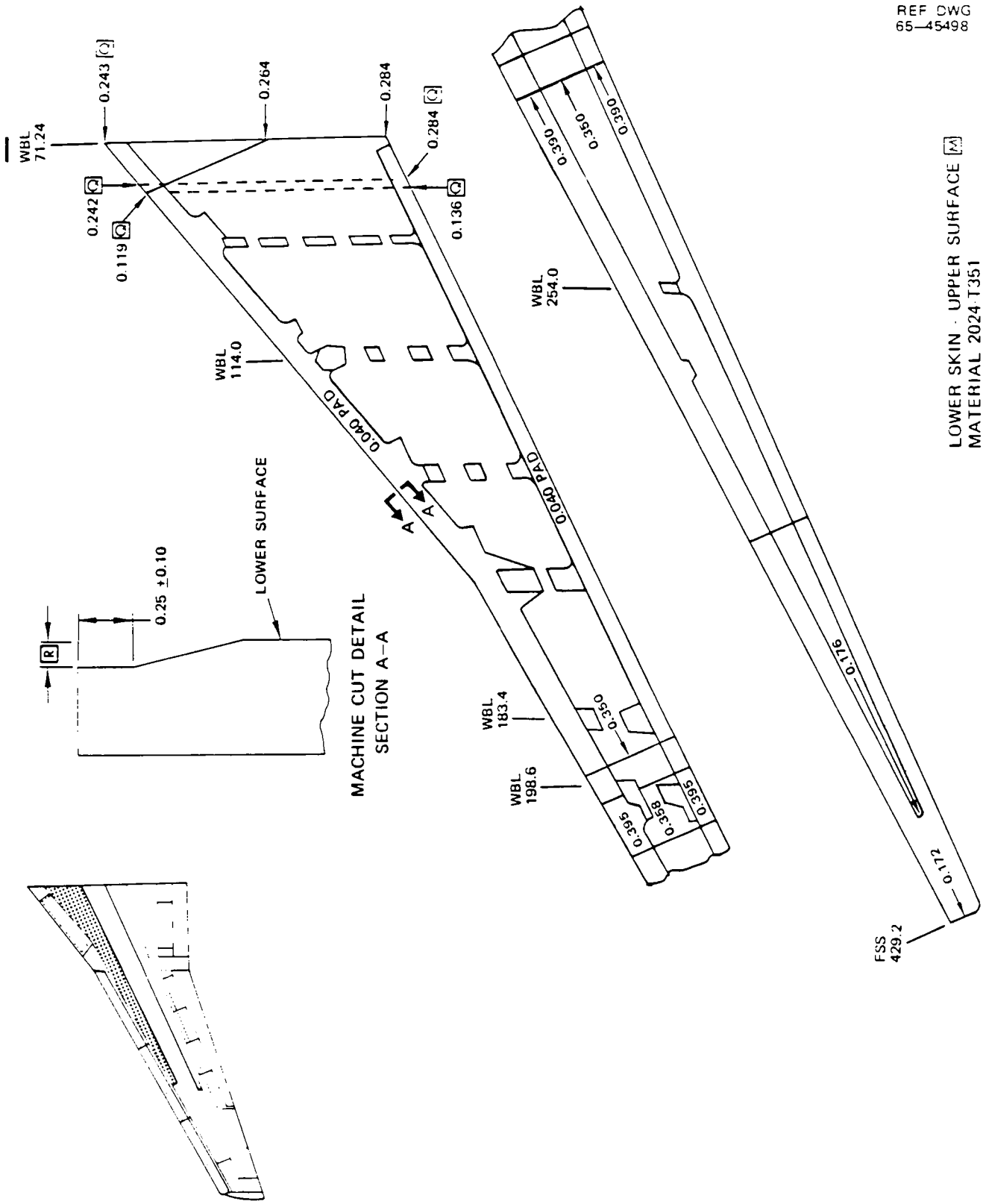

Wing Interspar Skin Identification
Figure 1 (Sheet 10)

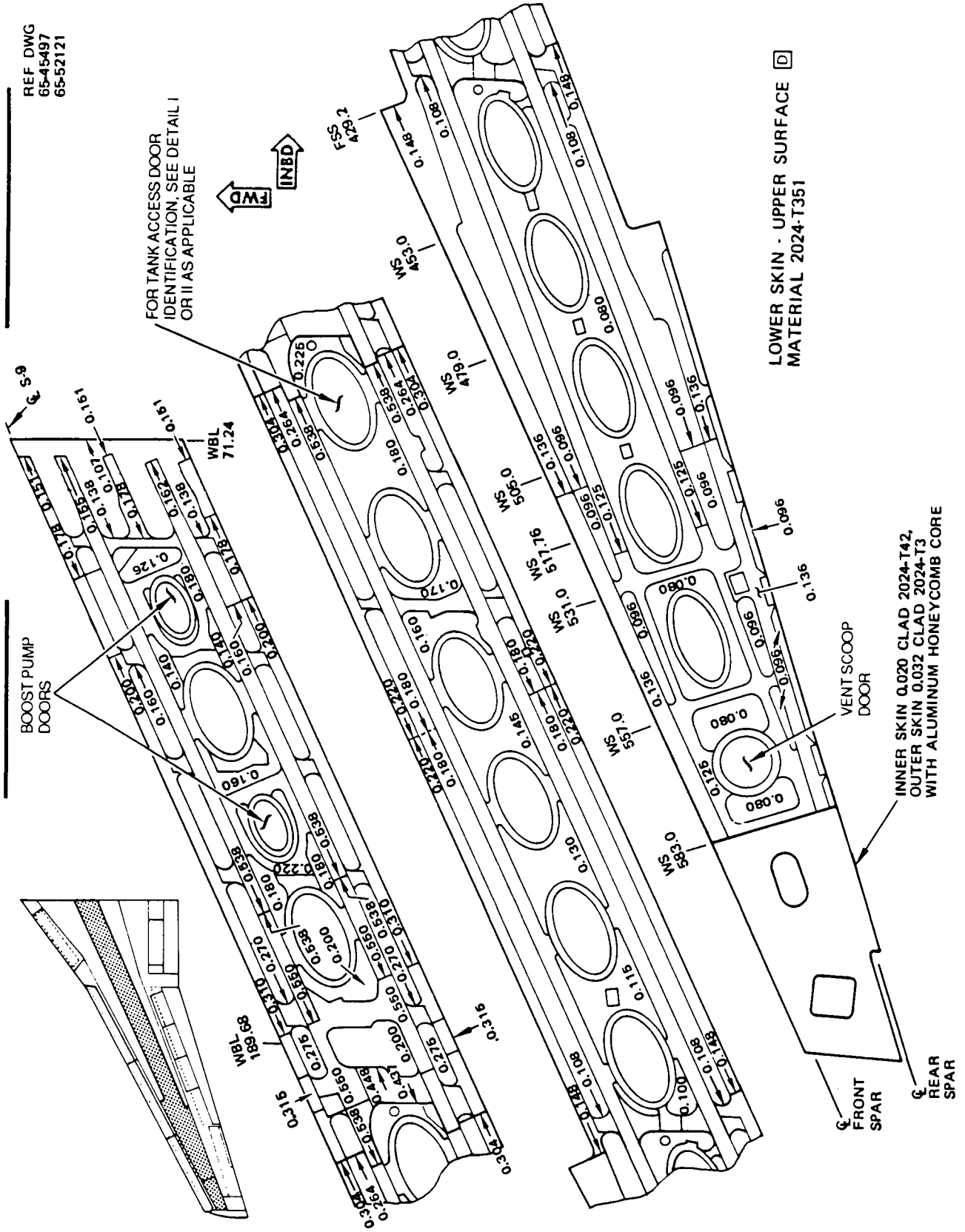

Wing Interspar Skin Identification
Figure 1 (Sheet 11)

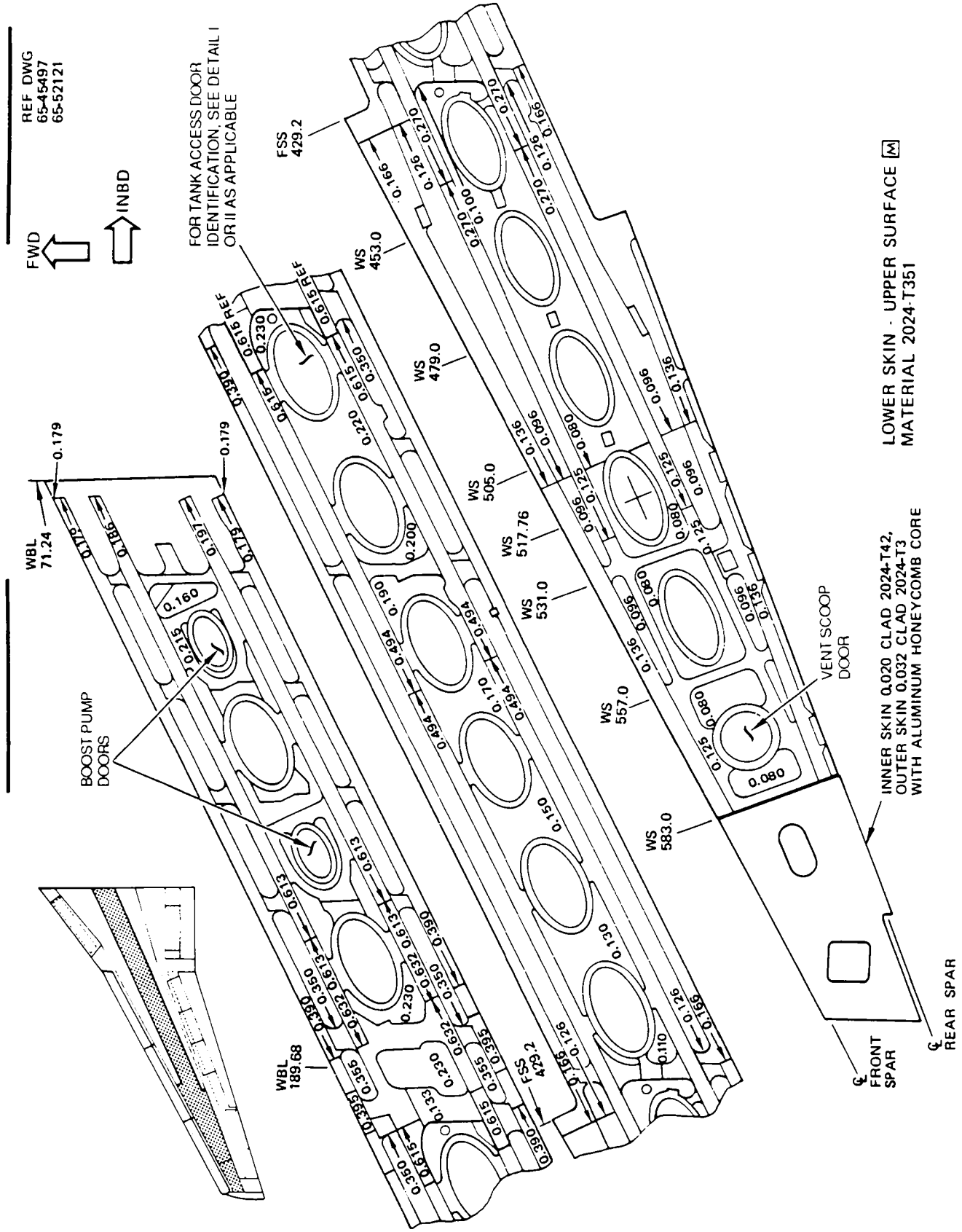

Wing Interspar Skin Identification
Figure 1 (Sheet 12)

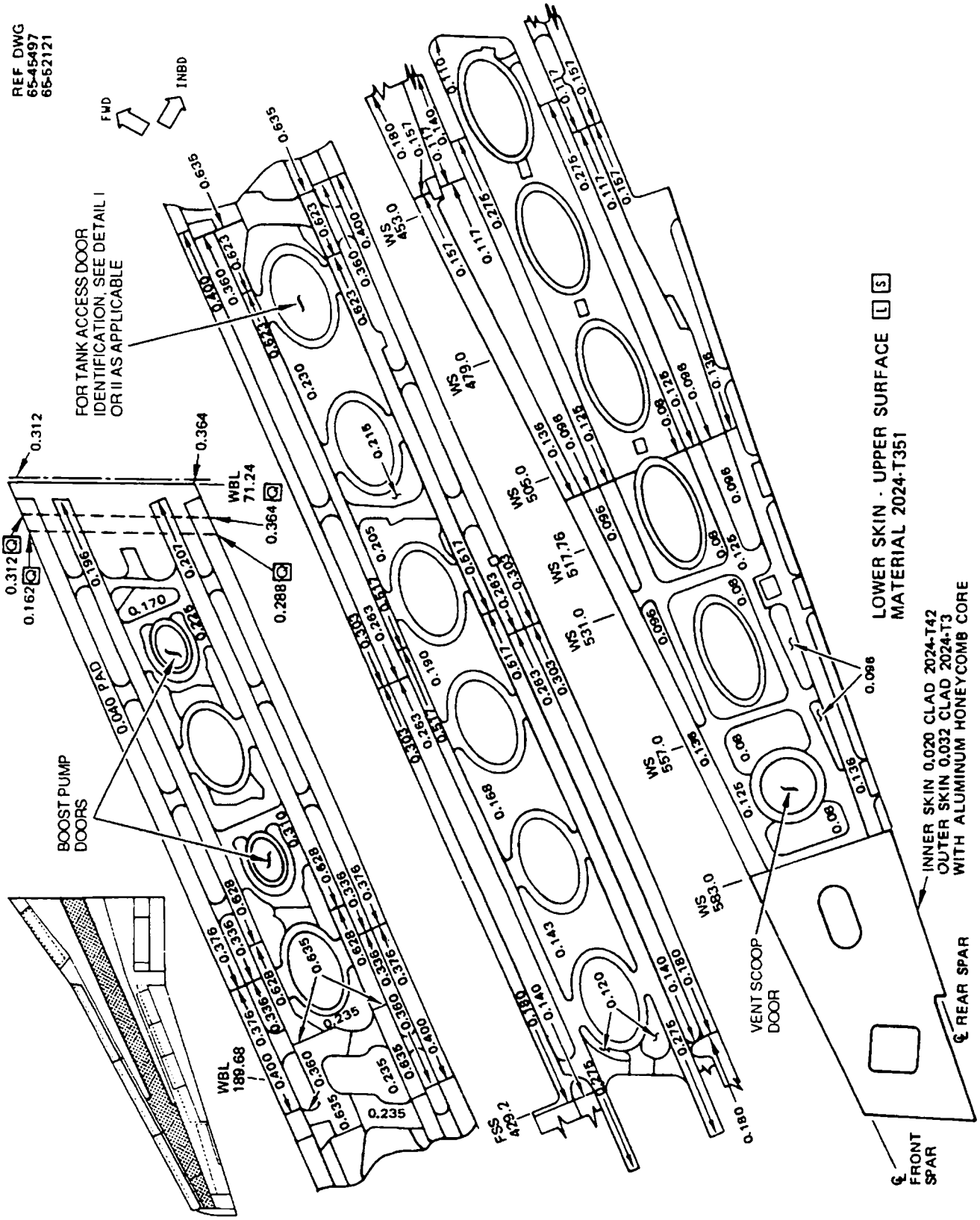

Wing Interspar Skin Identification
Figure 1 (Sheet 13)

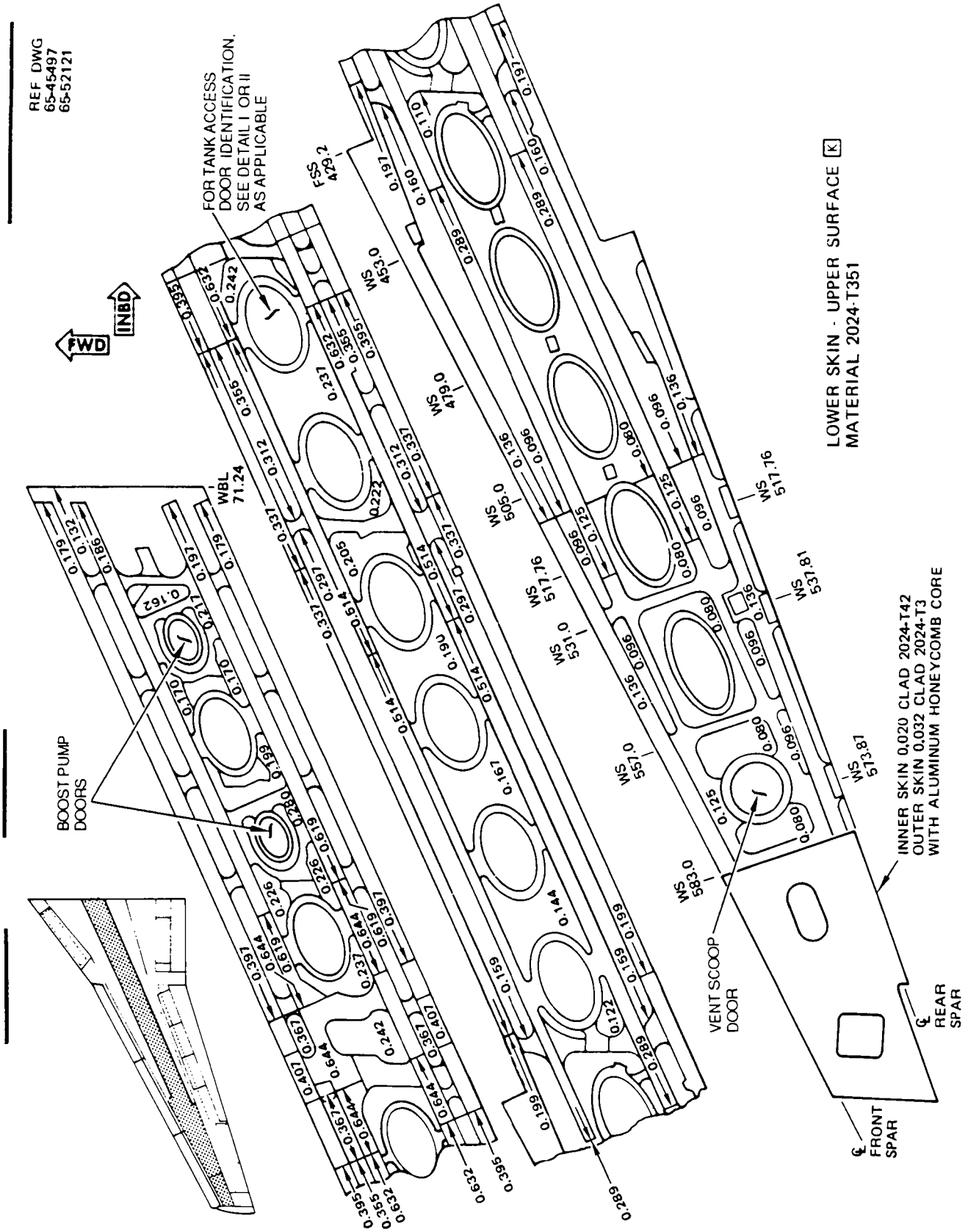

Wing Interspar Skin Identification
Figure 1 (Sheet 14)

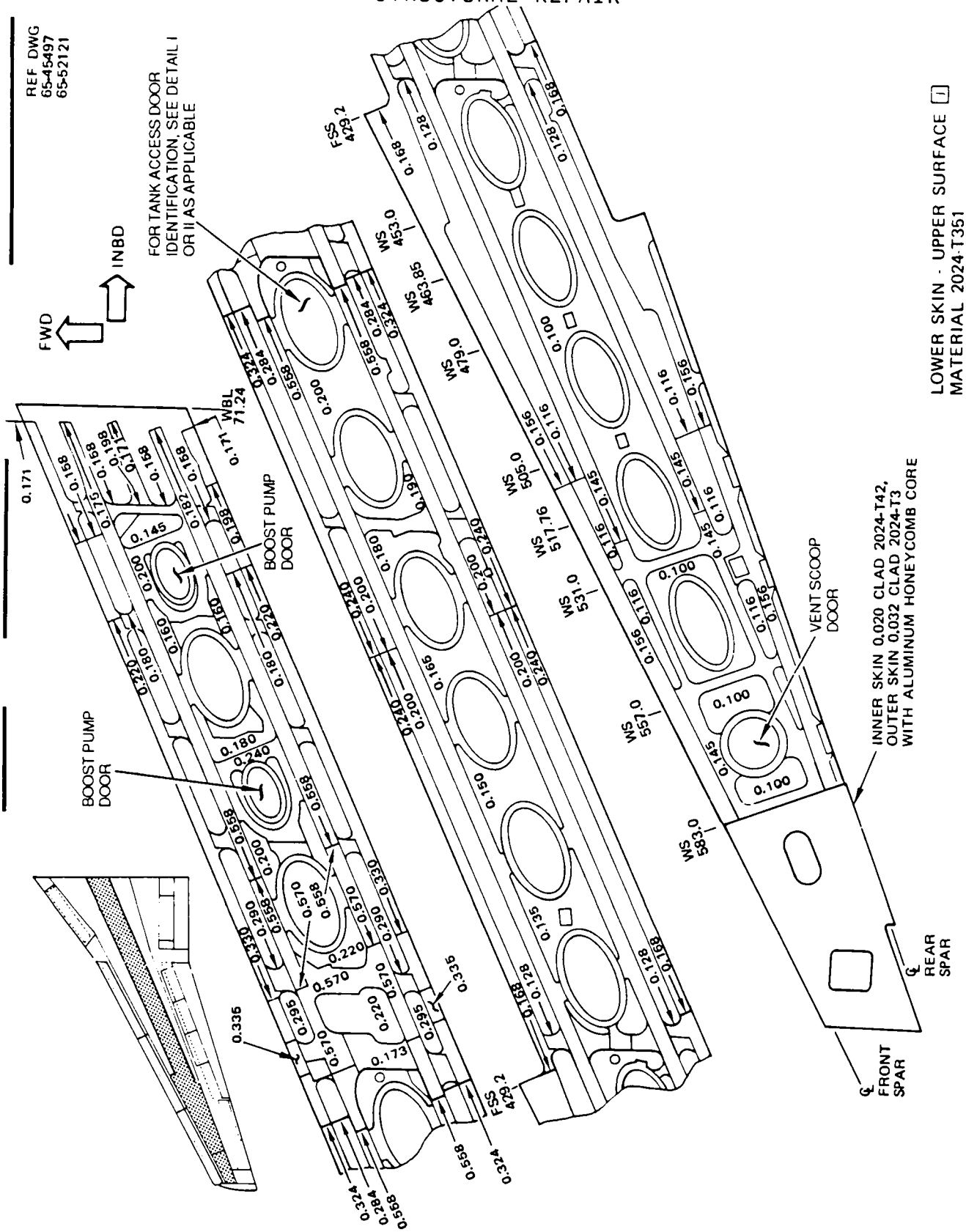

Wing Interspar Skin Identification
Figure 1 (Sheet 15)

REF DWG
65-50748

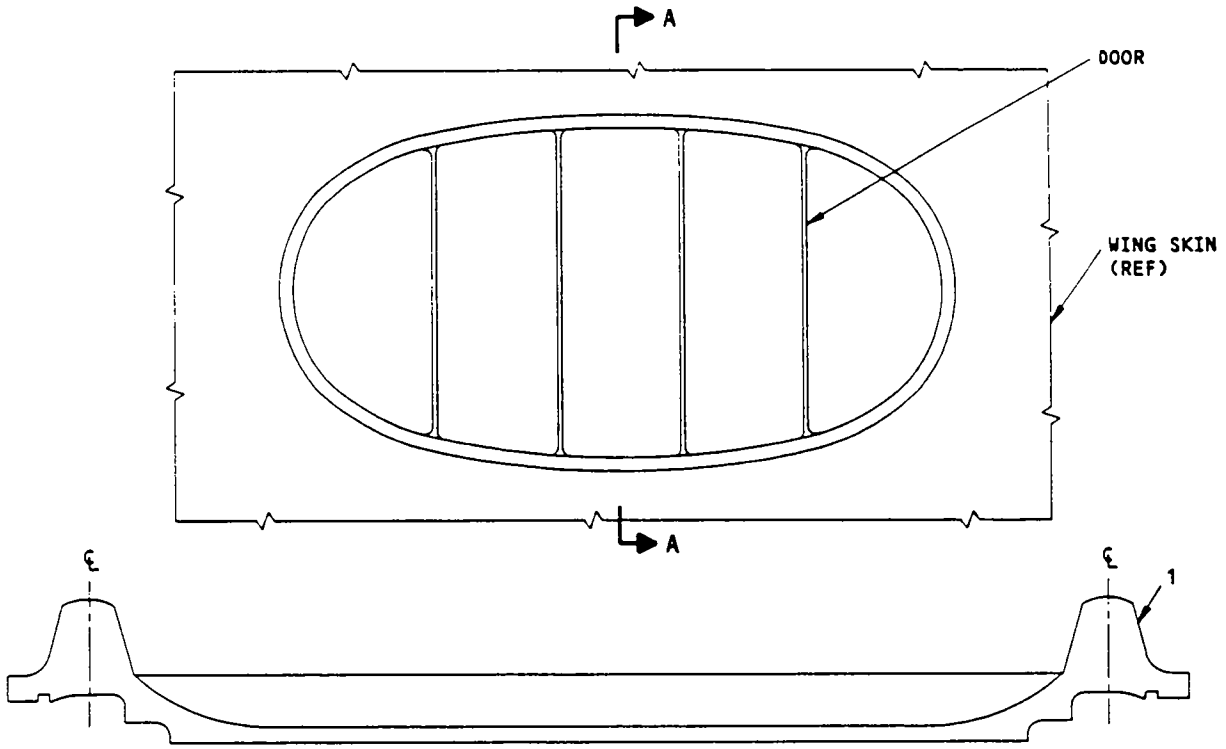

SECTION A-A
(ROTATED 90° CCW)

FUEL TANK ACCESS DOOR - CAST ALUMINUM
(DRIPSTICK DOOR SIMILAR)
DETAIL I

ITEM	DESCRIPTION	GAGE	MATERIAL	EFFECTIVITY
1	FUEL TANK ACCESS DOOR		A360 AL ALLOY QQ-A-591 COMP 12A OPTION: A380 AL ALLOY QQ-A-591 COMP 10	

LIST OF MATERIALS FOR DETAIL I

Wing Interspar Skin Identification
Figure 1 (Sheet 15A)

REF DWG
65C33357

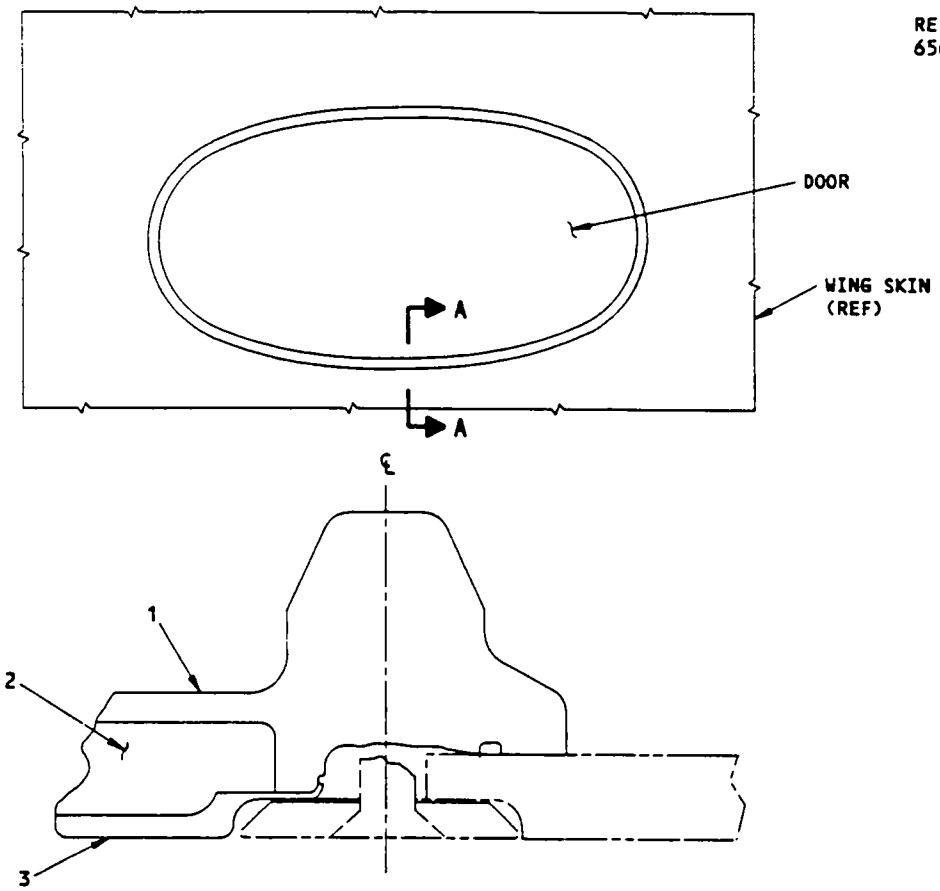

SECTION A-A
(ROTATED 90° CCW)

IMPACT RESISTANT FUEL TANK ACCESS DOOR
(DRIPSTICK DOOR SIMILAR)
DETAIL II

ITEM	DESCRIPTION	GAGE	MATERIAL	EFFECTIVITY
1	BACKING PLATE		NYLON 6/12 PER ASTM 4066, GROUP 6, CLASS 3, WEATHER RESISTANT, 30% GLASS FILLED. OPTION: NYLON 6/10 PER ASTM 4066 GRADE 7, 30% GLASS FILLED.	
2	CORE		5052 AL ALLOY CORE PER MIL-C-7438, GRADE B, CLASS 2, 12.0-1/8-30 OPTION: 5056 AL CORE PER MIL-C-7438, GRADE B, CLASS 2, 12.0-1/8-30.	
3	FACE PLATE	0.300	2024-T351 PER QQ-A-250/4	

LIST OF MATERIALS FOR DETAIL II

Wing Interspar Skin Identification
Figure 1 (Sheet 15B)

REF DWG
65-45496

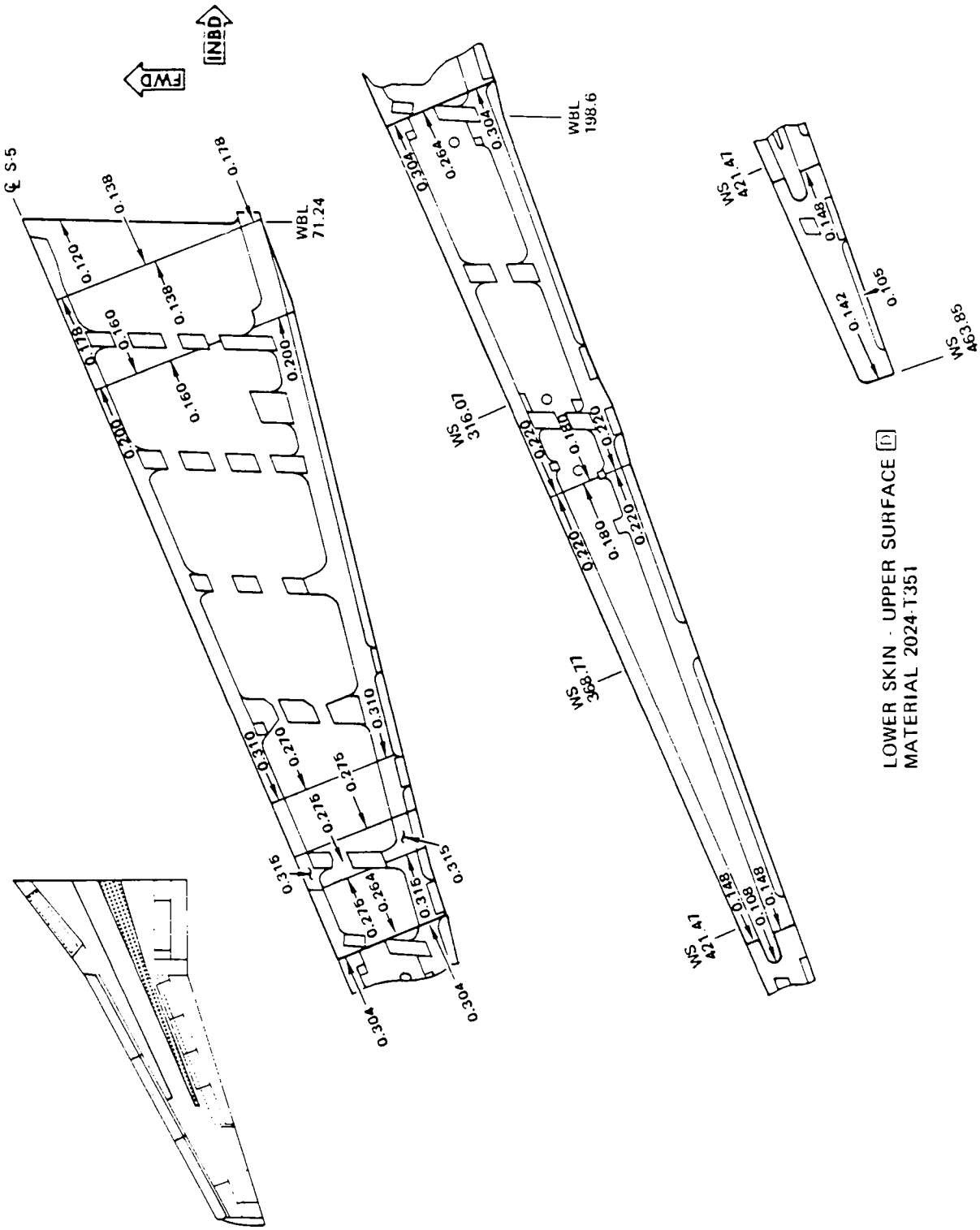

LOWER SKIN - UPPER SURFACE [D]
MATERIAL 2024-T351

Wing Interspar Skin Identification
Figure 1 (Sheet 16)

REF DWG
65-45496

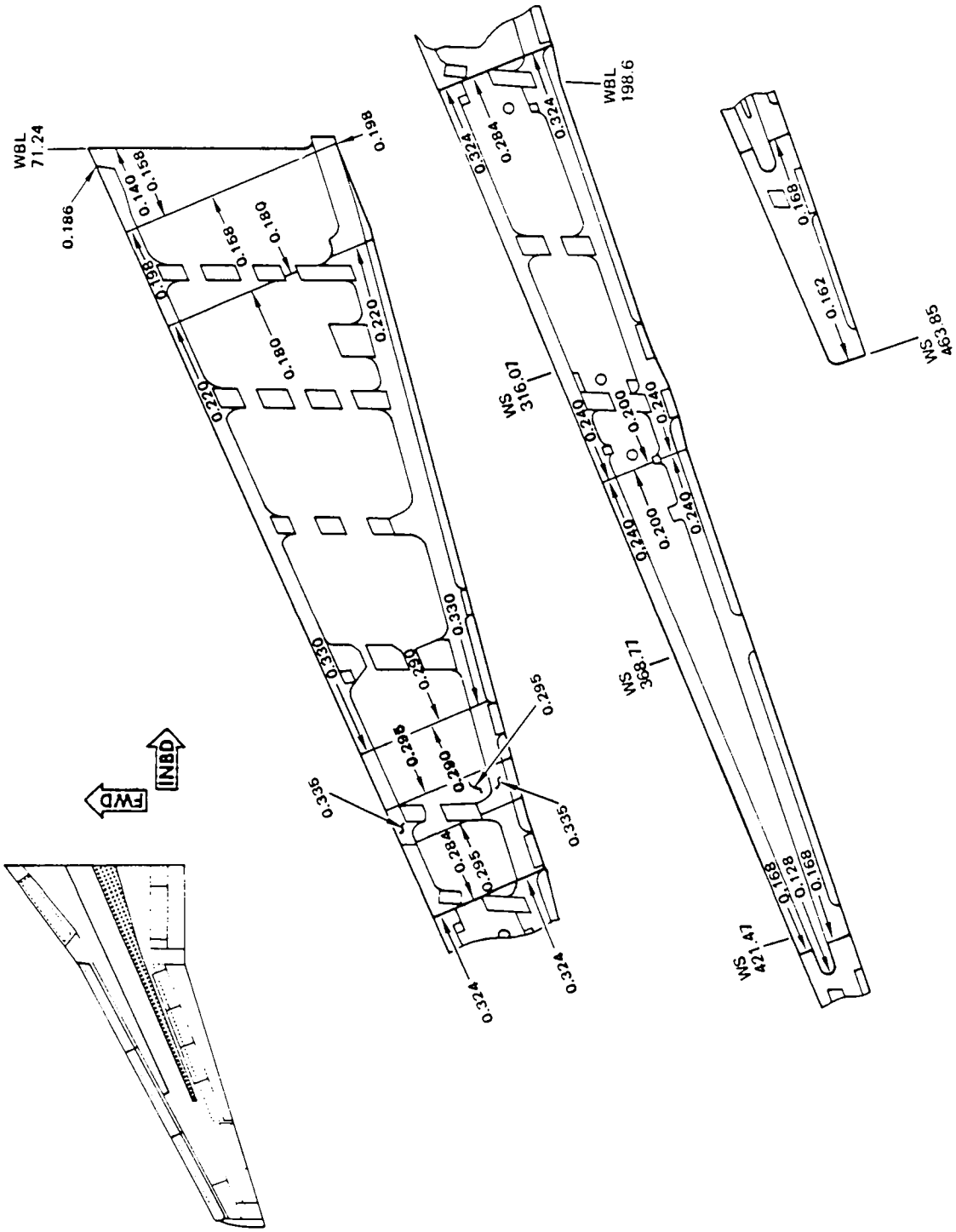

LOWER SKIN - UPPER SURFACE [J]
MATERIAL 2024-T351

Wing Interspar Skin Identification
Figure 1 (Sheet 17)

REF DWG
65-45496

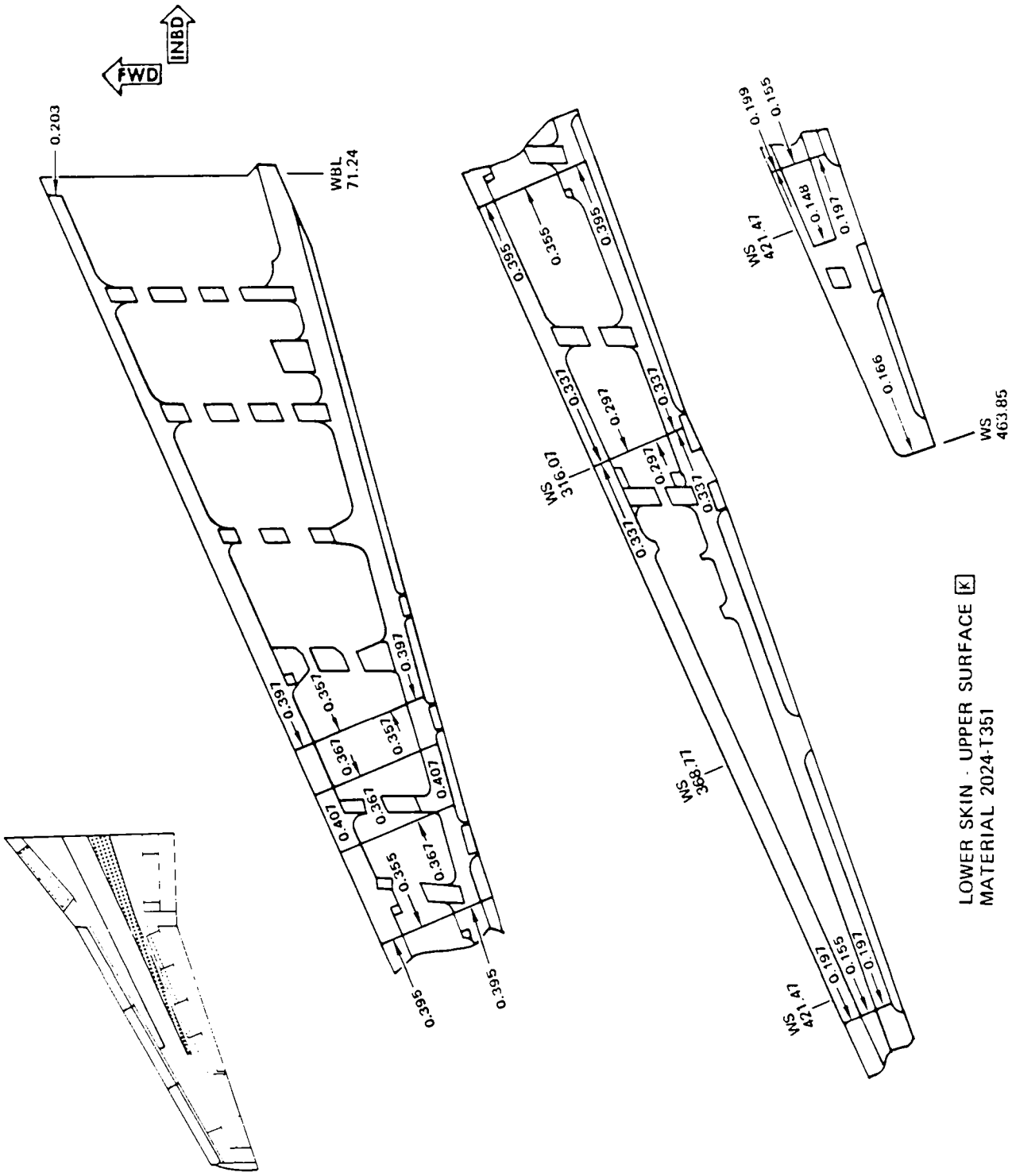

LOWER SKIN - UPPER SURFACE [K]
MATERIAL 2024-T351

Wing Interspar Skin Identification
Figure 1 (Sheet 18)

REF DWG
65-45196

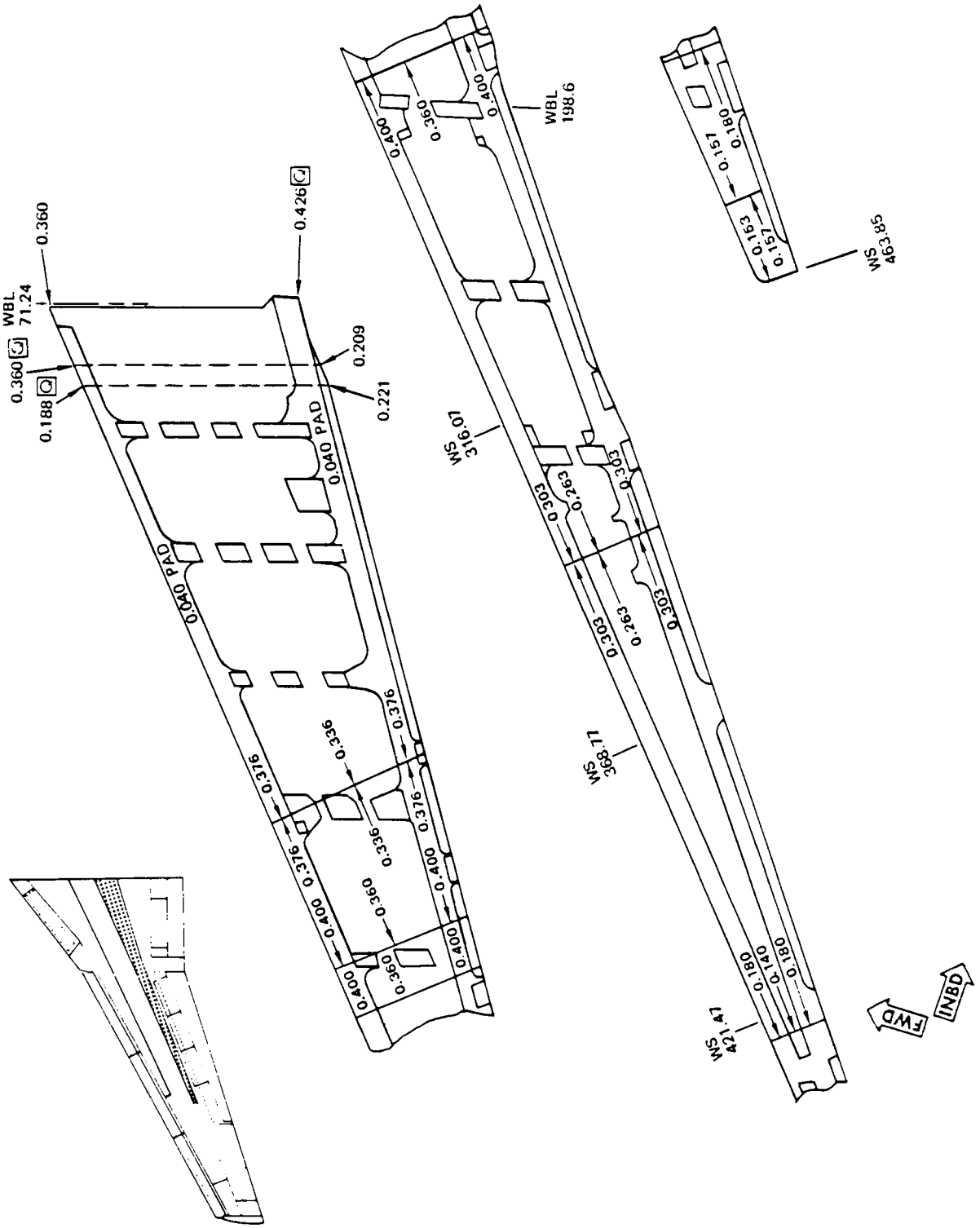

LOWER SKIN - UPPER SURFACE 1
MATERIAL 2024-T351

Wing Interspar Skin Identification
Figure 1 (Sheet 19)

REF DWG
65-45496

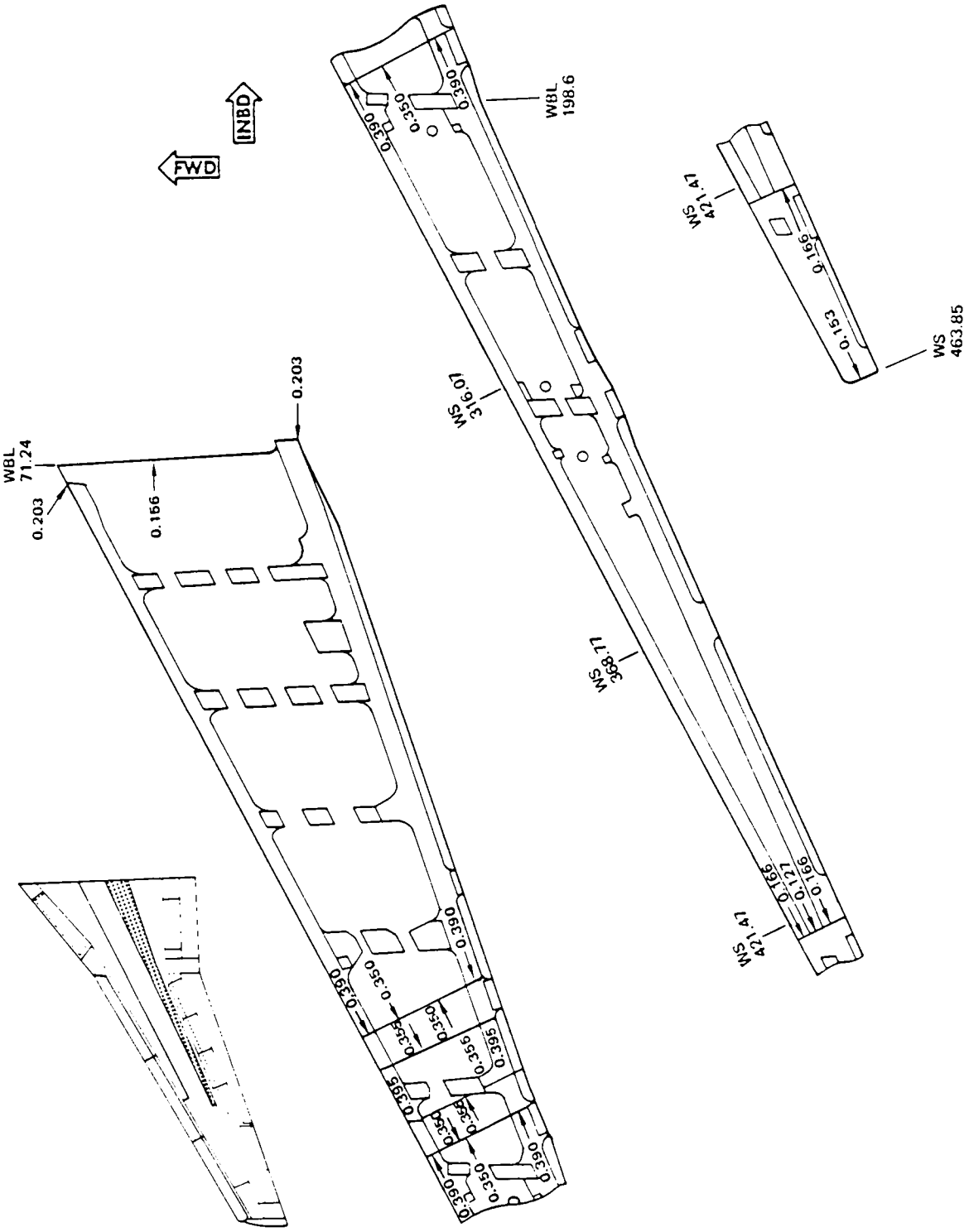

LOWER SKIN - UPPER SURFACE M
MATERIAL 2024-T351

Wing Interspar Skin Identification
Figure 1 (Sheet 20)

NOTES

[A] FOR CUM LINE NUMBERS:
1 THRU 5, 7

[B] FOR CUM LINE NUMBERS:
6, 8 THRU 71, 73 THRU 83, 85 THRU 101, 103 THRU 109, 111 THRU 127, 129 THRU 138, 140 THRU 142, 144 THRU 148, 150 THRU 156, 159 THRU 161, 163, 165, 167 THRU 172, 174 THRU 183, 185 THRU 193, 195, 197, 198, 200 THRU 202, 204, 206, 207, 209 THRU 211, 213, 214, 216, 218 THRU 222, 224, 226 THRU 229, 231 THRU 233, 235 THRU 237, 239 THRU 241

[C] FOR CUM LINE NUMBERS:
72, 84, 102, 110, 128, 143, 149, 155, 157, 158, 162, 164, 166, 173, 184, 194, 196, 199, 203, 205, 208, 212, 215, 217, 223, 225, 230, 234, 238, 242, 245, 249, 251, 254 THRU 256, 263, 265, 268, 274, 276, 278, 281, 286, 288 THRU 290, 294, 295, 297 THRU 322, 326, 328 THRU 330, 332 THRU 373, 376 THRU 379, 381 AND ON

[D] FOR CUM LINE NUMBERS:
243, 244, 246 THRU 248, 250, 252, 253, 257, 259 THRU 262, 264, 266, 267, 269 THRU 273, 275, 277, 279, 280, 282 THRU 285, 287, 291 THRU 293, 296, 323 THRU 325, 327, 331, 374, 375, 380, 383

[E] FOR CUM LINE NUMBERS:
139, 258

[F] FOR CUM LINE NUMBERS:
1 THRU 71, 73 THRU 83, 85 THRU 101, 103 THRU 109, 111 THRU 127, 129 THRU 138, 140 THRU 142, 144 THRU 148, 150 THRU 154, 156, 159 THRU 161, 163, 165, 167 THRU 172, 174 THRU 183, 185 THRU 193, 195, 197, 198, 200 THRU 202, 204, 206, 207, 209 THRU 211, 213, 214, 216, 218 THRU 222, 224, 226 THRU 229, 231 THRU 233, 235 THRU 237, 239 THRU 241, 243, 244, 246 THRU 248, 250, 252, 253, 257, 259 THRU 262, 264, 266, 267, 269 THRU 273, 275, 277, 279, 280, 282 THRU 285, 287, 291 THRU 294, 296, 323 THRU 325, 327, 331, 374, 375, 380, 383

[G] FOR CUM LINE NUMBERS:
72, 84, 102, 110, 128, 143, 149, 155, 157, 158, 162, 164, 166, 173, 184, 194, 196, 199, 203, 205, 208, 212, 215, 217, 223, 225, 230, 234, 238, 242, 245, 249, 251, 254 THRU 256, 263, 265, 268, 274, 276, 278, 281, 286, 288 THRU 290, 294, 295, 297 THRU 310

[H] FOR CUM LINE NUMBERS:
311 THRU 322, 236, 328 THRU 330, 332 THRU 373, 376 THRU 379, 381, 382, 384 AND ON EXCEPT AIRPLANES IN [J]

[J] FOR AIRPLANES WITH 125,000 LB MAX TAXI GROSS WEIGHT

[K] DELETED

[L] DELETED

[M] 0.170 CONSTANT THICKNESS

[N] DELETED

[O] DELETED

SKIN REPAIR INDEX	
LOCATION OF DAMAGE	REPAIR FIG. NO.
UPPER SKIN	57-30-3 FIG. 1 & 2
LOWER SKIN	57-30-3 FIG. 3 & 4

Wing Center Section Skin Identification
Figure 2 (Sheet 1)

REF DWG
65-45403
65-45426
65-45427
65-45428

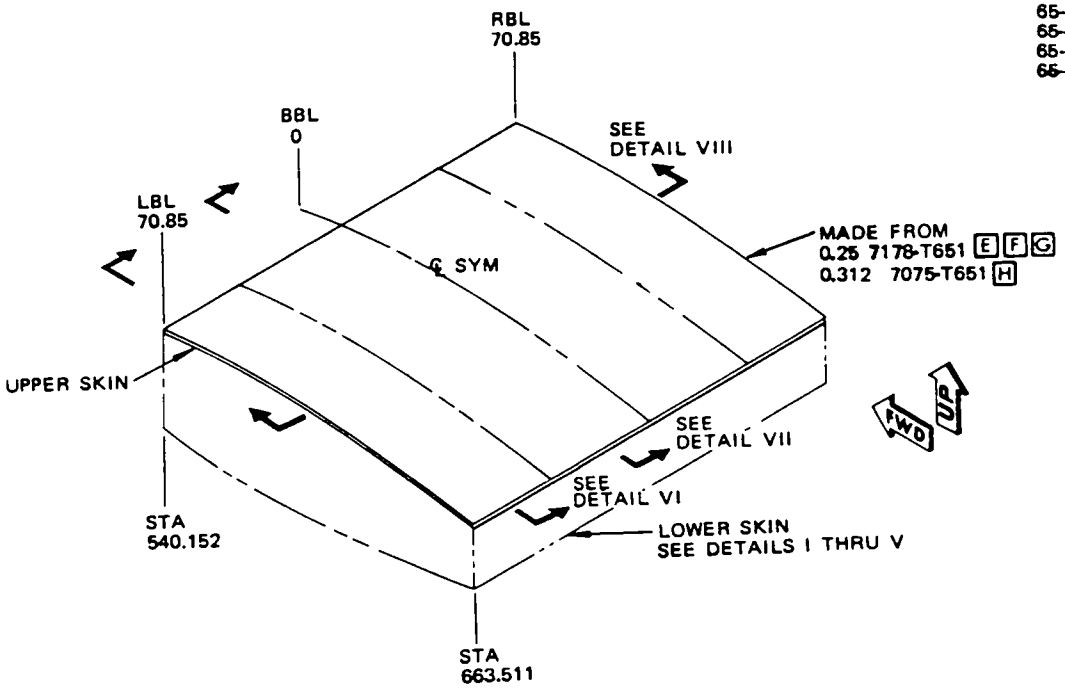

UPPER SKIN

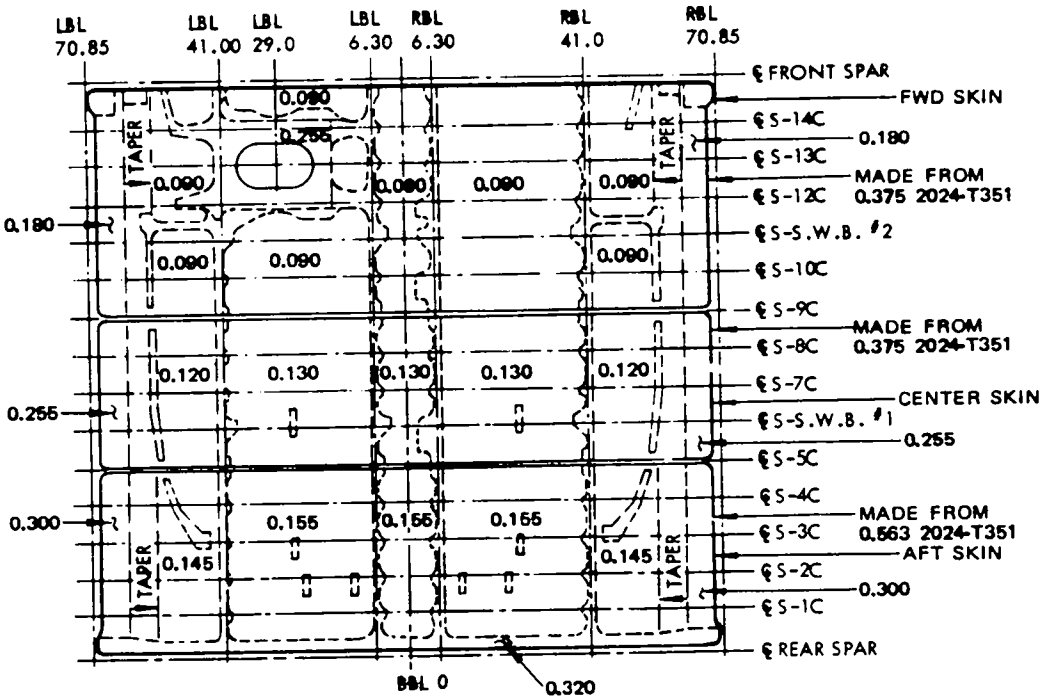

DETAIL I
LOWER SKIN A

Wing Center Section Skin Identification
Figure 2 (Sheet 2)

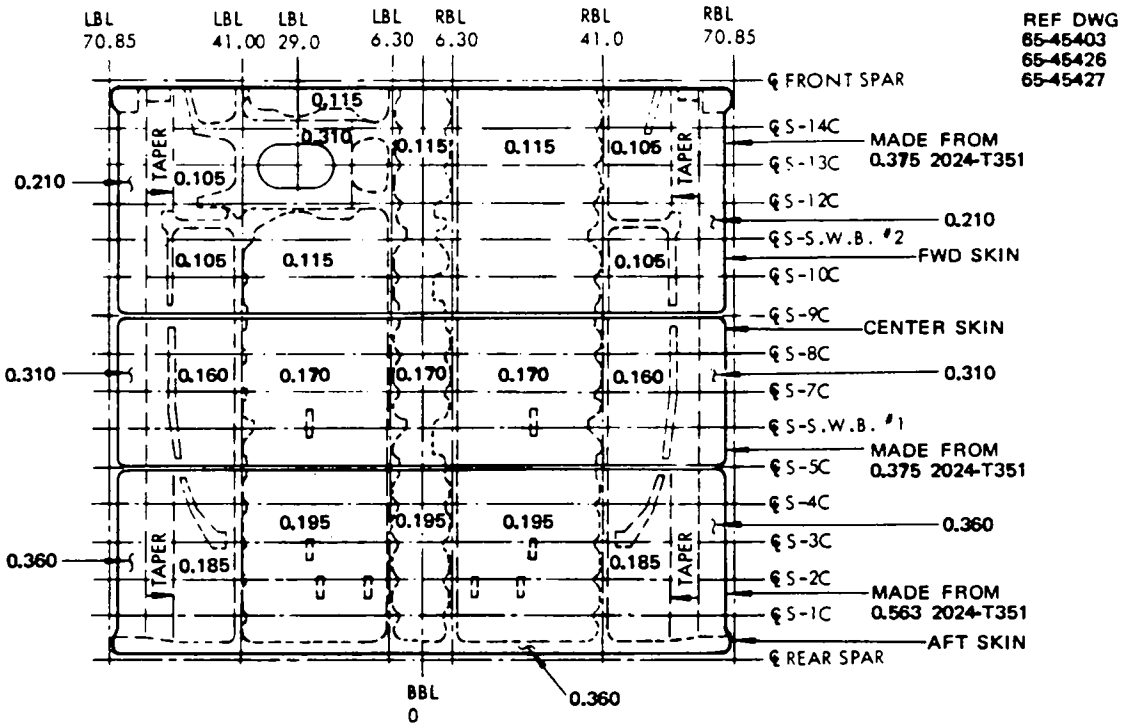

DETAIL II
LOWER SKIN B

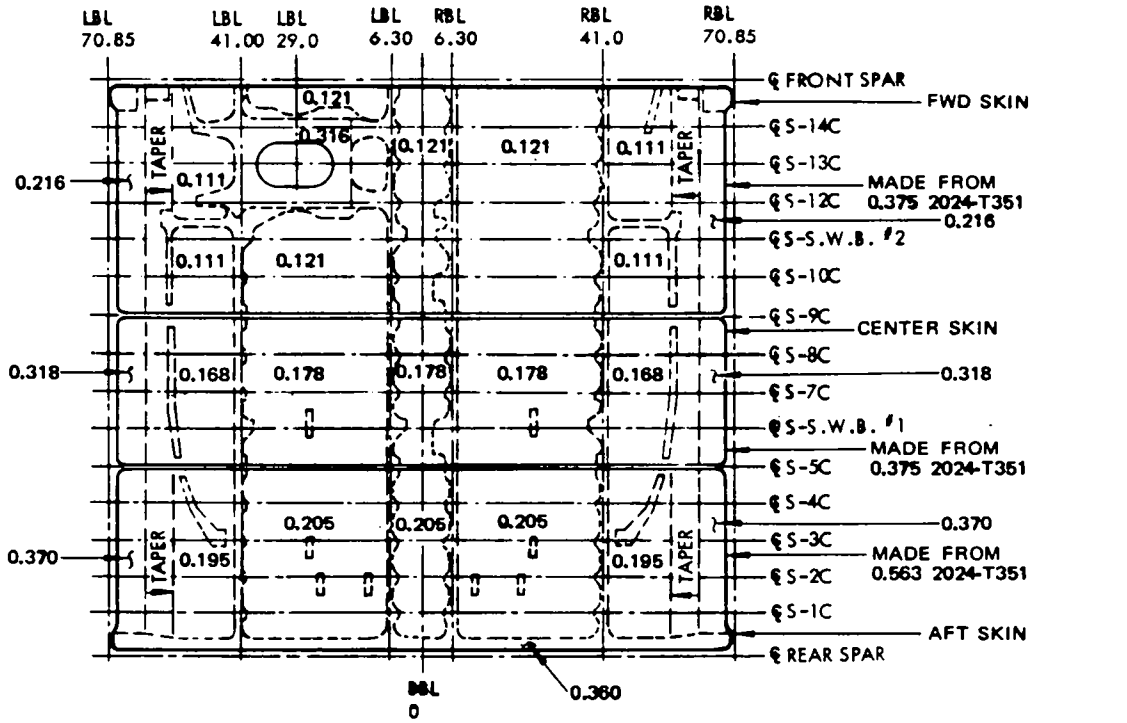

DETAIL III
LOWER SKIN C

Wing Center Section Skin Identification
Figure 2 (Sheet 3)

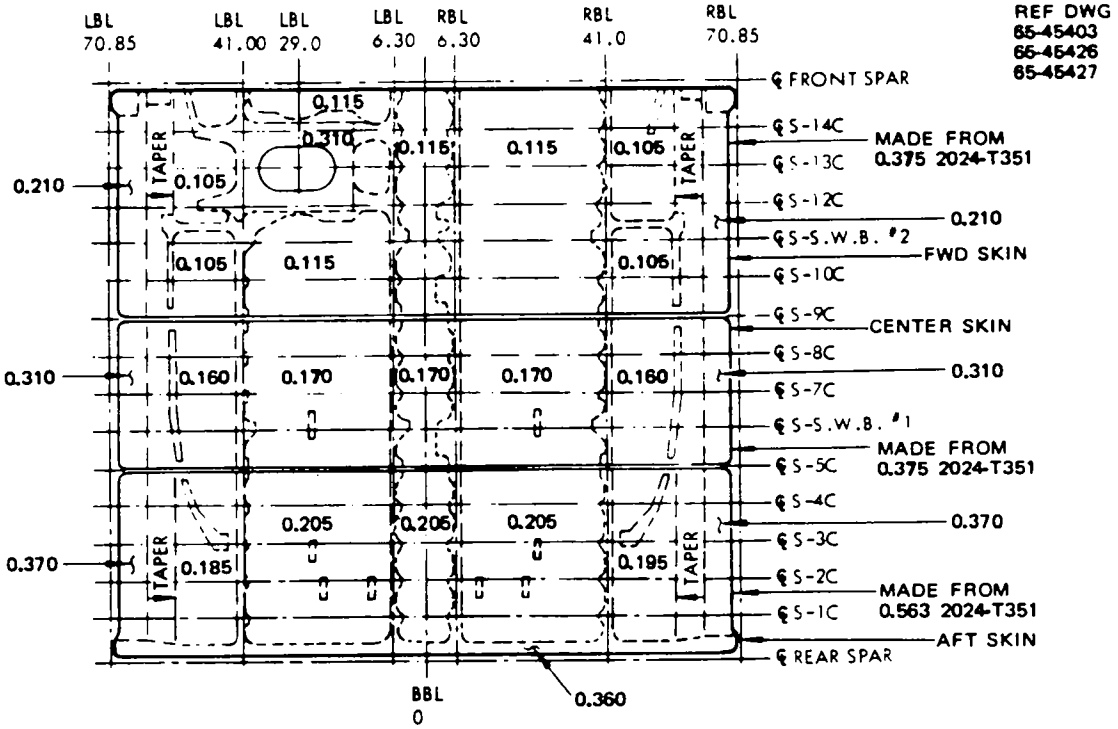

DETAIL IV
LOWER SKIN D

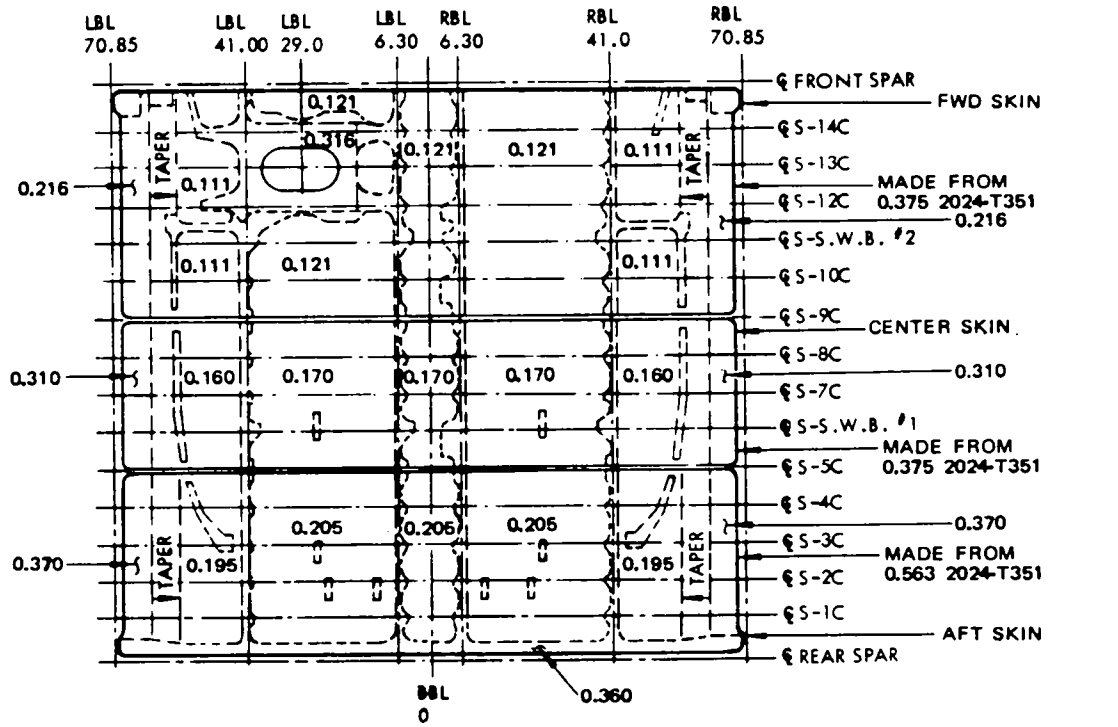

DETAIL V
LOWER SKIN E

Wing Center Section Skin Identification
Figure 2 (Sheet 4)

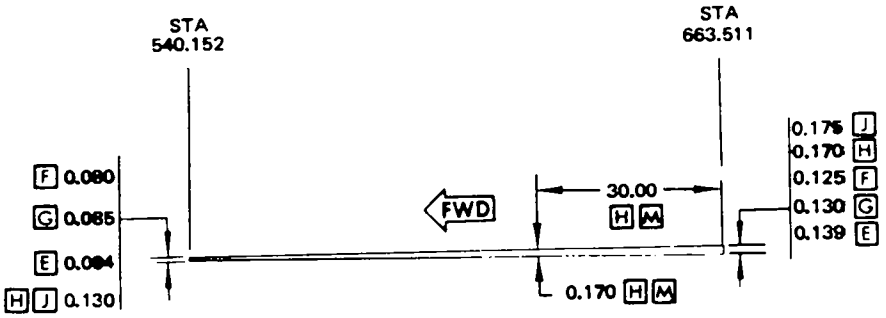

DETAIL VI
UPPER SKIN

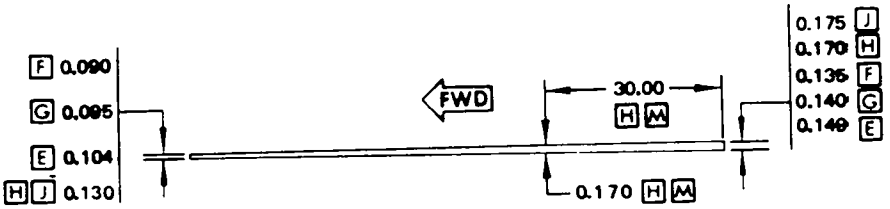

DETAIL VII
UPPER SKIN

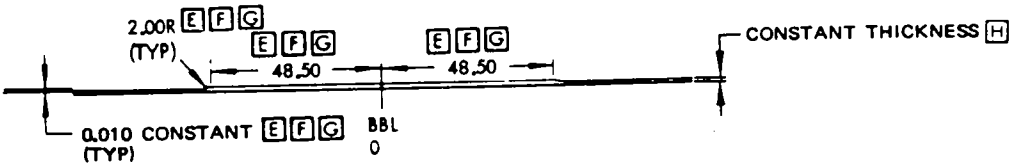

DETAIL VIII
UPPER SKIN

Wing Center Section Skin Identification
Figure 2 (Sheet 5)

ITEM	MATERIAL	REPAIR FIG. NO.
1	.063 7075-T6 CLAD	57-30-4 FIG 1,2, 3
2	.063 7075-T6 CLAD	57-30-4 FIG 1,2, 3
3	.016 5052-H34 OUTER .375 5052 HONEY COMB CORE .016 2024-T4 CLAD INNER	
4	.060 GLASS FABRIC REINFORCED PLASTIC PANEL	
5	.063 2024-T3 CLAD	
6	.063 7075-T6 CLAD	57-30-4 FIG 1,2, 3
7	.016+.016 2024-T3 CLAD	
8	GLASS FABRIC REINFORCED PLASTIC HONEY COMB PANEL	
9	.040 2024-T3 CLAD	

Wing Leading Edge Skin Identification
Figure 3 (Sheet 1)

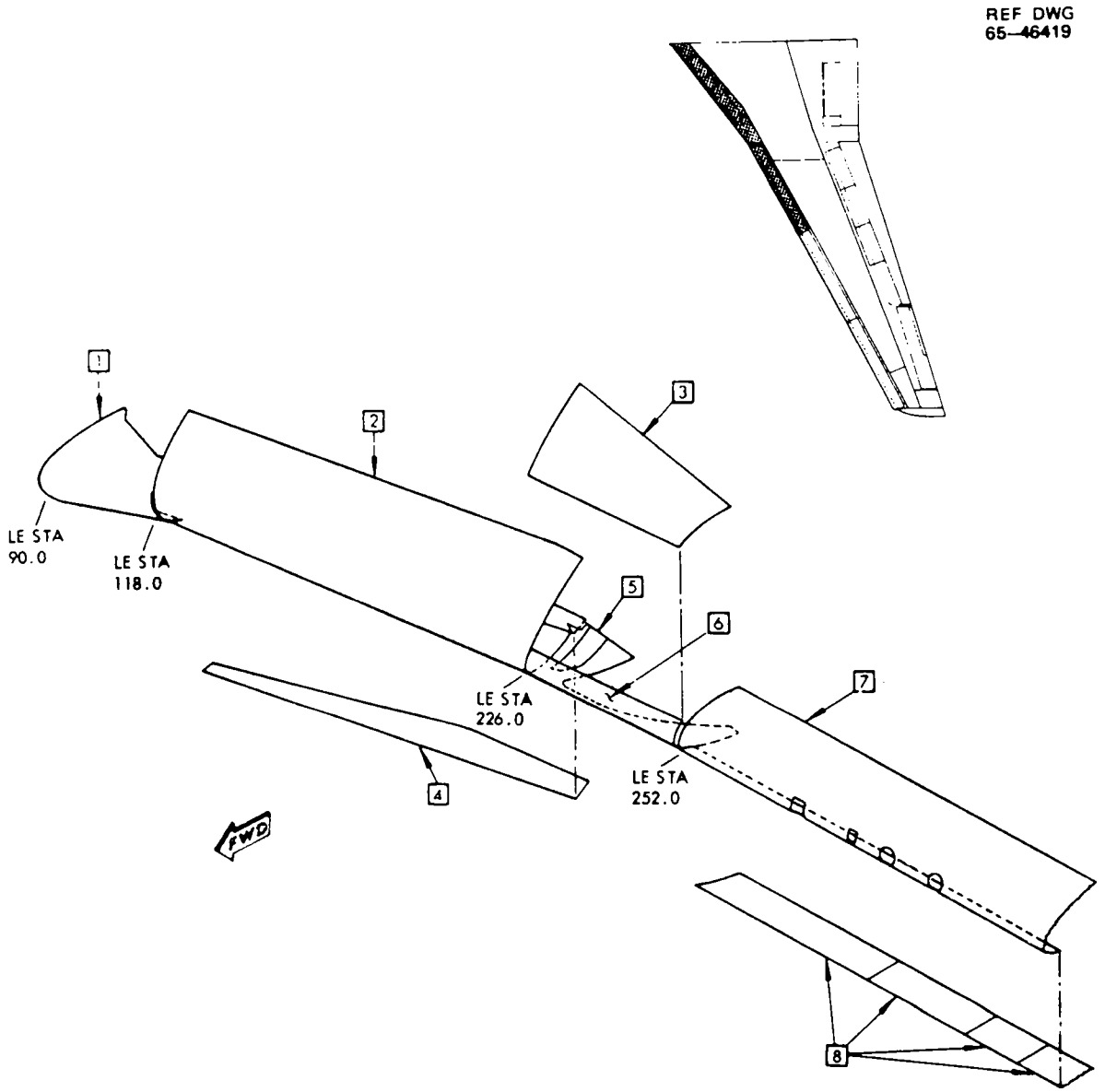

Wing Leading Edge Skin Identification
Figure 3 (Sheet 2)

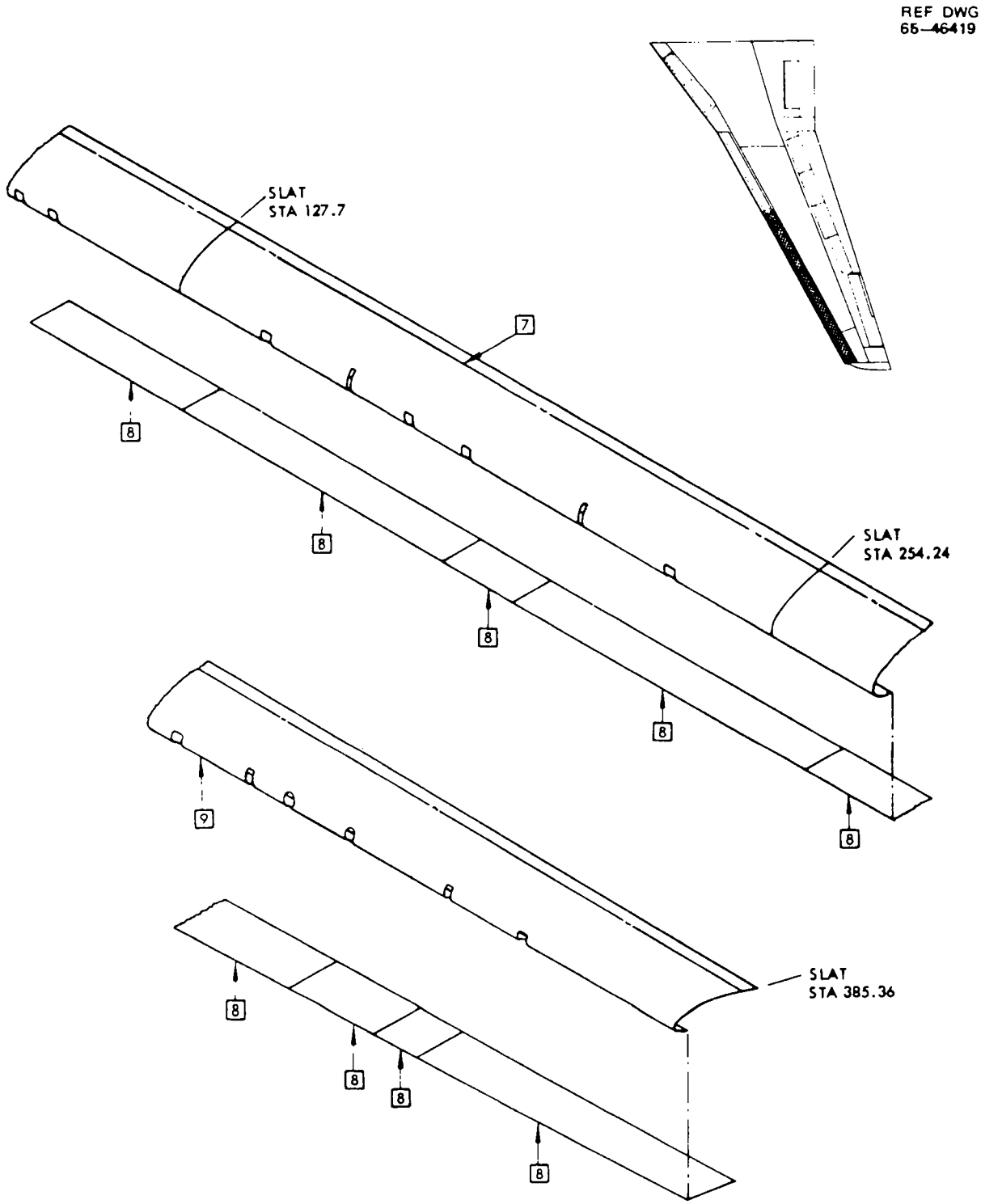

Wing Leading Edge Skin Identification
Figure 3 (Sheet 3)

ITEM	MATERIAL	REPAIR FIG. NO.
1	PANEL ASSEMBLY INNER SKIN 0.016 CLAD 2024-T42 DOUBLER 0.016 CLAD 2024-T3 OUTER SKIN 0.012 CLAD 2024-T3 ALUMINUM HONEYCOMB CORE 4-15N PER BMS 4-4	
2	PANEL ASSEMBLY PLASTIC GLASS FABRIC REINFORCED EPOXY SANDWICH WITH PLASTIC HONEYCOMB CORE PER BMS 8-124 CLASS I, TYPE 1. GRADE 4 AND GLASS FABRIC REINFORCED PLASTIC SKIN PER BMS 8-79 CLASS I, TYPE 0	
3	PANEL ASSEMBLY PLASTIC GLASS FABRIC EPOXY SANDWICH WITH NOMEX HONEYCOMB CORE PER BMS 8-124 CLASS IV TYPE 5 GRADE 3 AND GLASS FABRIC SKIN PER BMS 8-97 CLASS I TYPE 0 V	
4	PANEL ASSEMBLY PLASTIC GLASS FABRIC REINFORCED EPOXY SANDWICH WITH PLASTIC HONEYCOMB CORE - HRP 3/16-GF11-4.0 AND GLASS FABRIC SKIN PER BMS 8-79 CLASS I, TYPE 0 V	
5	BAC1520-1384 6061-T6511	
6	PANEL ASSEMBLY INNER SKIN 0.016 CLAD 7075-T6 DOUBLER 0.020 + 0.020 CLAD 7075-T6 OUTER SKIN 0.016 CLAD 7075-T6 WITH ALUMINUM HONEYCOMB CORE 3-20N PER BMS 4-4	
7	PANEL ASSEMBLY INNER SKIN 0.016 CLAD 2024-T3 DOUBLER 0.020 CLAD 2024-T3 OUTER SKIN 0.016 CLAD 2024-T3 WITH ALUMINUM HONEYCOMB CORE 4-10N PER BMS 4-4	
8	PANEL ASSEMBLY INNER SKIN 0.016 CLAD 2024-T3 DOUBLER 0.020 CLAD 2024-T3 OUTER SKIN 0.016 CLAD 2024-T3 WITH HONEYCOMB CORE 4-10N PER BMS 4-4	
9	0.071 CLAD 2024-T3	
10	0.063 CLAD 2024-T4	
11	0.063 CLAD 2024-T3	
12	PANEL ASSEMBLY INNER SKIN 0.016 CLAD 2024-T3 DOUBLER 0.020 + 0.020 CLAD 2024-T3 OUTER SKIN 0.016 CLAD 2024-T3 WITH ALUMINUM HONEYCOMB CORE 4-2N PER BMS 4-4	

Wing Trailing Edge Skin Identification
Figure 4 (Sheet 1)

ITEM	MATERIAL	REPAIR FIG. NO.
13	PANEL ASSEMBLY INNER SKIN 0.016 CLAD 2024-T3 DOUBLER 0.020 CLAD 2024-T3 OUTER SKIN 0.016 CLAD 2024-T3 WITH ALUMINUM HONEYCOMB CORE 3-10N PER BMS 4-4	
14	0.050 CLAD 2024-T3	
15	PANEL PLASTIC GLASS FABRIC REINFORCED EPOXY LAMINATED PANEL PER BMS 8-79 TYPE 0, I OR II AS REQUIRED, CLASS I V W	
16	0.040 CLAD 2024-T3	
17	0.080 CLAD 2024-T3	
18	AND10135-1005 7075-T6511	
19	PANEL ASSEMBLY INNER SKIN 0.016 CLAD 2024-T3 DOUBLE 0.020 CLAD 2024-T3 OUTER SKIN 0.016 CLAD 2024-T3 WITH HONEYCOMB CORE 3-15N PER BMS 4-4	
20	0.016 + 0.016 CLAD 2024-T3	

ITEM	MATERIAL	REPAIR FIG. NO.
21	PANEL ASSEMBLY PLASTIC GLASS FABRIC REINFORCED EPOXY SANDWICH WITH PLASTIC HONEYCOMB CORE HRP 3/16 GF11-4.0 AND GLASS FABRIC LAMINATED SKIN PER BMS 8-79 TYPE II, GRADE 181	
22	PANEL ASSEMBLY PLASTIC GLASS FABRIC REINFORCED EPOXY SANDWICH WITH PLASTIC HONEYCOMB CORE PER BMS 8-124 CLASS IV, TYPE 5, GRADE 3 AND GLASS FABRIC LAMINATED SKIN PER BMS 8-79 TYPE II, GRADE 181	
23	0.071 SHT 2024-T3	
24	PANEL ASSEMBLY INNER SKIN 0.016 CLAD 2024-T3 DOUBLER 0.02 CLAD 2024-T3 OUTER SKIN 0.016 CLAD 2024-T3 WITH ALUMINUM HONEYCOMB CORE 4-10N PER BMS 4-4F	
25	PANEL ASSEMBLY INNER SKIN 0.016 CLAD 2024-T3 DOUBLER 0.020 CLAD 2024-T3 OUTER SKIN 0.016 CLAD 2024-T3 WITH ALUMINUM HONEYCOMB CORE 3-15N PER BMS 4-4F	

Wing Trailing Skin Identification
Figure 4 (Sheet 2)

ITEM	MATERIAL	REPAIR FIG. NO.
26	ALUMINUM HONEYCOMB CORE 3 -20N PER BMS 4-4F	
27	PANEL ASSEMBLY INNER SKIN 0.016 CLAD 2024-0 HT TR T4 DOUBLER 0.020 + 0.020 CLAD 2024-T3 OUTER SKIN 0.016 CLAD 2024-T3 WITH ALUMINUM HONEYCOMB CORE 4-20N PER BMS 4-4F.	
28	PANEL ASSEMBLY INNER SKIN 0.016 2024-0 HT TR T4 DOUBLER 0.032 CLAD 2024-0 + 0.020 + 0.020 CLAD 2024-T3 OUTER SKIN 0.016 CLAD 2024-T3 WITH ALUMINUM HONEYCOMB CORE 4-20N PER BMS 4-4F.	
29	PANEL ASSEMBLY INNER SKIN 0.016 2024-0 HT TR T42 DOUBLER 0.032 CLAD 2024-0 + 0.020 + 0.020 2024-T3 OUTER SKIN 0.016 2024-T3 WITH ALUMINUM HONEYCOMB CORE 4-20N PER BMS 4-4F.	
30	INNER SKIN 0.016 7075-0, HT TR T6	
31	INNER DOUBLER 0.016 7075-0, HT TR T6	
32	OUTER SKIN 0.016 7075-T6	
33	OUTER DOUBLER 0.016 7075-T6	

ITEM	MATERIAL	REPAIR FIG. NO.
34	DISCHARGE STRAP 0.032 CLAD 2024-T3	
35	TRAILING EDGE BAC1520-1424 2024-T3511	
36	PANEL ASSEMBLY FIBERGLASS/ARAMID COMPOSITE SANDWICH WITH NONMETALLIC HONEYCOMB CORE PER BMS 8-124 CLASS IV TYPE 5 GRADE 3	
37	PANEL ASSEMBLY FIBERGLASS/ARAMID/ GRAPHITE COMPOSITE SANDWICH WITH NONMETALLIC HONEYCOMB CORE PER BMS 8-124 CLASS IV TYPE 5 GRADE 3	
	SEE DETAIL VI	
38	PANEL ASSEMBLY FIBERGLASS/GRAPHITE COMPOSITE SANDWICH WITH NONMETALLIC HONEYCOMB CORE PER BMS 8-124 CLASS IV TYPE V GRADE 3.0	
39	PANEL ASSEMBLY FIBERGLASS/EPOXY COMPOSITE SANDWICH WITH NONMETALLIC HONEYCOMB CORE PER BMS 8-124 CLASS IV TYPE V GRADE 3.0	

Wing Trailing Edge Skin Identification
Figure 4 (Sheet 3)

ITEM	MATERIAL	REPAIR FIG. NO.
40	GLASS/EPOXY HONEYCOMB SANDWICH W SKIN-SEE DETAIL III CORE-NONMETALLIC HONEYCOMB PER BMS 8-124, CLASS IV, TYPE IV, GRADE 3.0	
41	GRAPHITE/GLASS EPOXY HONEYCOMB SANDWICH W SKIN-SEE DETAIL IV CORE-NONMETALLIC HONEYCOMB PER BMS 8-124, CLASS IV, TYPE IV, GRADE 3.0 STIFFENER-SEE DETAIL V CORE-NOMMETALLIC HONEYCOMB PER BMS 8-124, CLASS I, TYPE II, GRADE 12.0	

Wing Trailing Edge Skin Identification
Figure 4 (Sheet 4)

BOEING PROPRIETARY - Copyright © - Unpublished Work - See title page for details.

NOTES

[A] FOR CUM LINE NUMBERS:
1 THRU 7, 9

[B] FOR CUM LINE NUMBERS:
8, 10 THRU 224, 226 THRU 240, 242, 243, 245, 248 THRU 253, 257, 260, 261, 263 THRU 265, 267, 274, 276

[C] FOR CUM LINE NUMBERS:
225, 241, 244, 246, 247, 254 THRU 256, 258, 259, 262, 266, 268 THRU 273, 275, 277 AND ON

[D] FOR CUM LINE NUMBERS:
1 THRU 142, 157, 170

[E] FOR CUM LINE NUMBERS:
143 THRU 156, 158 THRU 169, 171 THRU 314

[F] FOR CUM LINE NUMBERS:
1 THRU 224, 226 THRU 240, 242, 243, 245, 248 THRU 253, 257, 260, 261, 264, 267

[G] FOR CUM LINE NUMBERS:
225, 241, 244, 246, 247, 254 THRU 256, 258, 259, 262, 263, 265, 266, 268 AND ON

[H] FOR ALL AIRPLANES WITH SB 32-1056 INCORPORATED.

[J] FOR CUM LINE NUMBERS:
285, 286, 289 AND ON

[K] FOR CUM LINE NUMBERS:
1 THRU 314

[L] FOR CUM LINE NUMBERS:
315 AND ON

[M] DELETED

[N] FOR CUM LINE NUMBERS:
1 THRU 1008

[O] FOR CUM LINE NUMBERS:
1001 THRU 1006, 1008 THRU 1014, 1016 THRU 1021, 1023 THRU 1453, 1486
(BOEING REF: P4341 THRU P4399, P4801 THRU P5499, P8979 THRU P9995)

[P] FOR AIRPLANES NOT IN [O]

[Q] FOR CUM LINE NUMBERS:
315 THRU 999

[R] FOR CUM LINE NUMBERS:
225, 241, 244, 246, 247, 254 THRU 256, 258, 259, 262, 266, 268 THRU 273, 275, 277 THRU 999

[S] FOR CUM LINE NUMBERS:
1342, 1347 THRU 1453, 1486
(BOEING REF: P4341-P4399, P4801-P5499, P8979-P9995)

[T] FOR CUM LINE NUMBERS:
1361 THRU 1453, 1486
(BOEING REF: P4341-P4399, P4801-P5499, P8979-P9995)

[U] CORE RIBBON DIRECTION

[V] REFER TO BOEING DRAWINGS TO DETERMINE THE NUMBER OF PLIES REQUIRED TO MEET SPECIFIED THICKNESS REQUIREMENTS

[W] 250°F (121°C) CURE AT MANUFACTURE

[X] (BOEING REF: P4351 THRU P4399, P4801 THRU P5499, P8980 THRU P9995)

[Y] FOR ALL AIRPLANES NOT LISTED IN [X]

[Z] CORE RIBBON DIRECTION OPTIONAL

Wing Trailing Edge Skin Identification
Figure 4 (Sheet 5)

NOTES (CONT)

AA PLY ORIENTATION CONVENTION: THE PLY ORIENTATION OF EACH PLY IS DESIGNATED BY A NUMBER (IN DEGREES) REPRESENTING THE ORIENTATION OF THE AXIS PARALLEL TO THE DIRECTION OF FILAMENTS (IN TAPE) OR LONGITUDINALLY ORIENTED YARN (IN A WOVEN FABRIC) WITH RESPECT TO A REFERENCE AXIS. 0 DEGREES IS THE REFERENCE AXIS. THE DIRECTION OF LONGITUDINAL YARN IN A WOVEN FABRIC IS CALLED THE WARP DIRECTION

AB MATERIAL AND PLY ORIENTATION ARE ALWAYS SHOWN FOR FIELD AREAS. SEE BOEING DRAWINGS FOR EDGEBANDS AND AREAS WITH DOUBLERS WHENEVER THEY ARE NOT SHOWN IN THE MANUAL AS ADJUNCTS TO FIELD AREAS

AC FOR ALL AIRPLANES NOT LISTED IN F AND X

AD PREPREG GLASS FABRIC PER BMS 8-79, TYPE 1581

AE PREPREG GRAPHITE FABRIC PER BMS 8-168 CLASS II, TYPE II, STYLE 3K-70-PW

AF PREPREG GRAPHITE TAPE PER BMS 8-168, CLASS I, TYPE II, GRADE 190

AG MOISTURE BARRIER PLY

AH FOR AIRPLANES WITH CUM LINE NUMBERS: P4218-P4345, P8970-P8978

AI PREGREG NONWOVEN KEVLAR MAT PER BMS 8-310

AJ FOR AIRPLANES WITH CUM LINE NUMBERS: P4346-P4399, P4801-P5499, P8979-P9995

AK PREPREG GLASS FABRIC PER BMS 8-79, CLASS III, GRADE I, TYPE 181, OPTIONAL: TYPE 120

AL PREPREG ARAMID FABRIC PER BMS 8-219, STYLE 285

AM PREPREG GRAPHITE FABRIC PER BMS 8-168, CLASS II, TYPE II, STYLE 3K-70-PW

AN FOR AIRPLANES NOT IN AK OR AI

Wing Trailing Edge Skin Identification
Figure 4 (Sheet 6)

BOEING PROPRIETARY - Copyright © - Unpublished Work - See title page for details.

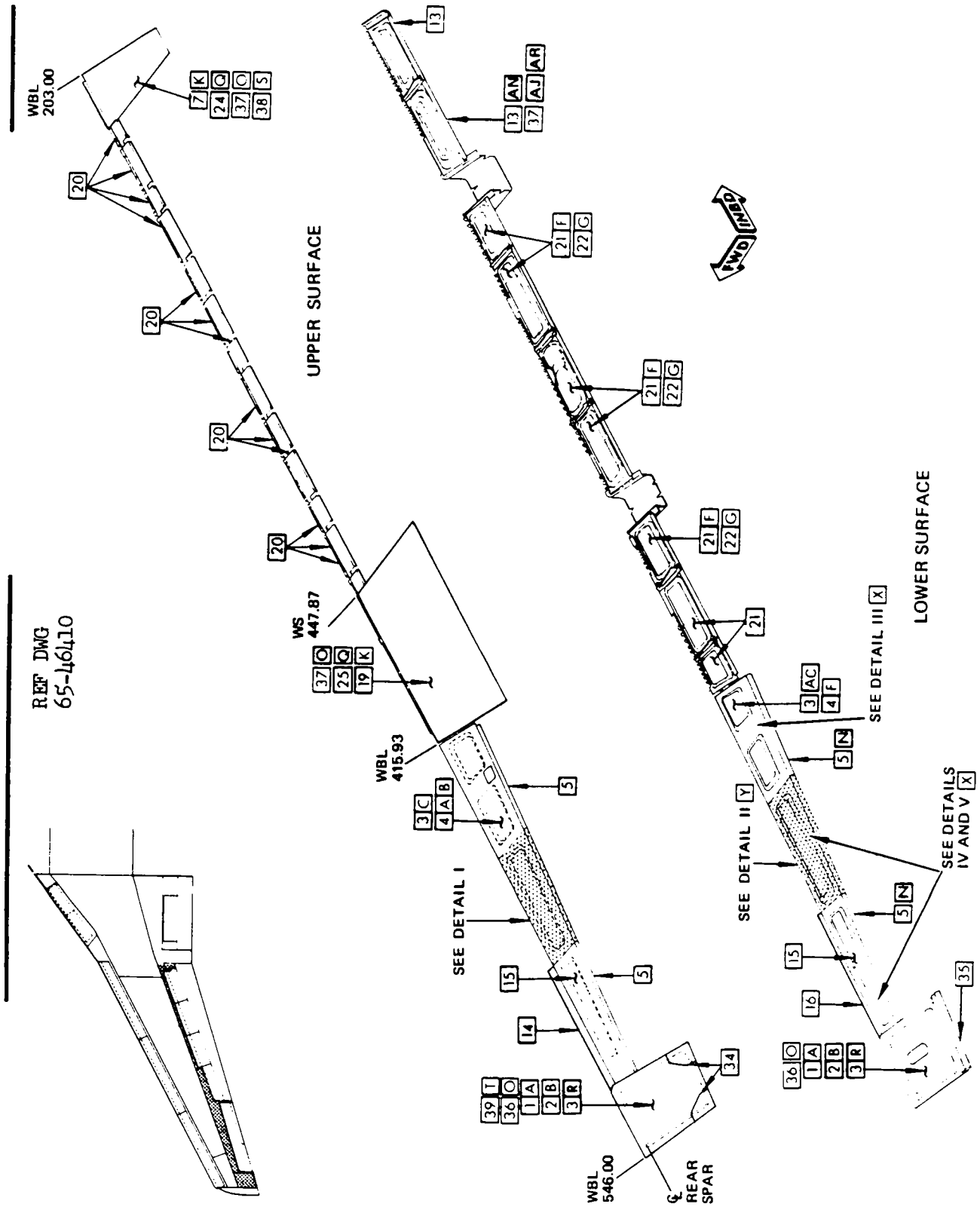

Wing Trailing Edge Skin Identification
Figure 4 (Sheet 7)

REF DWG
65-50820

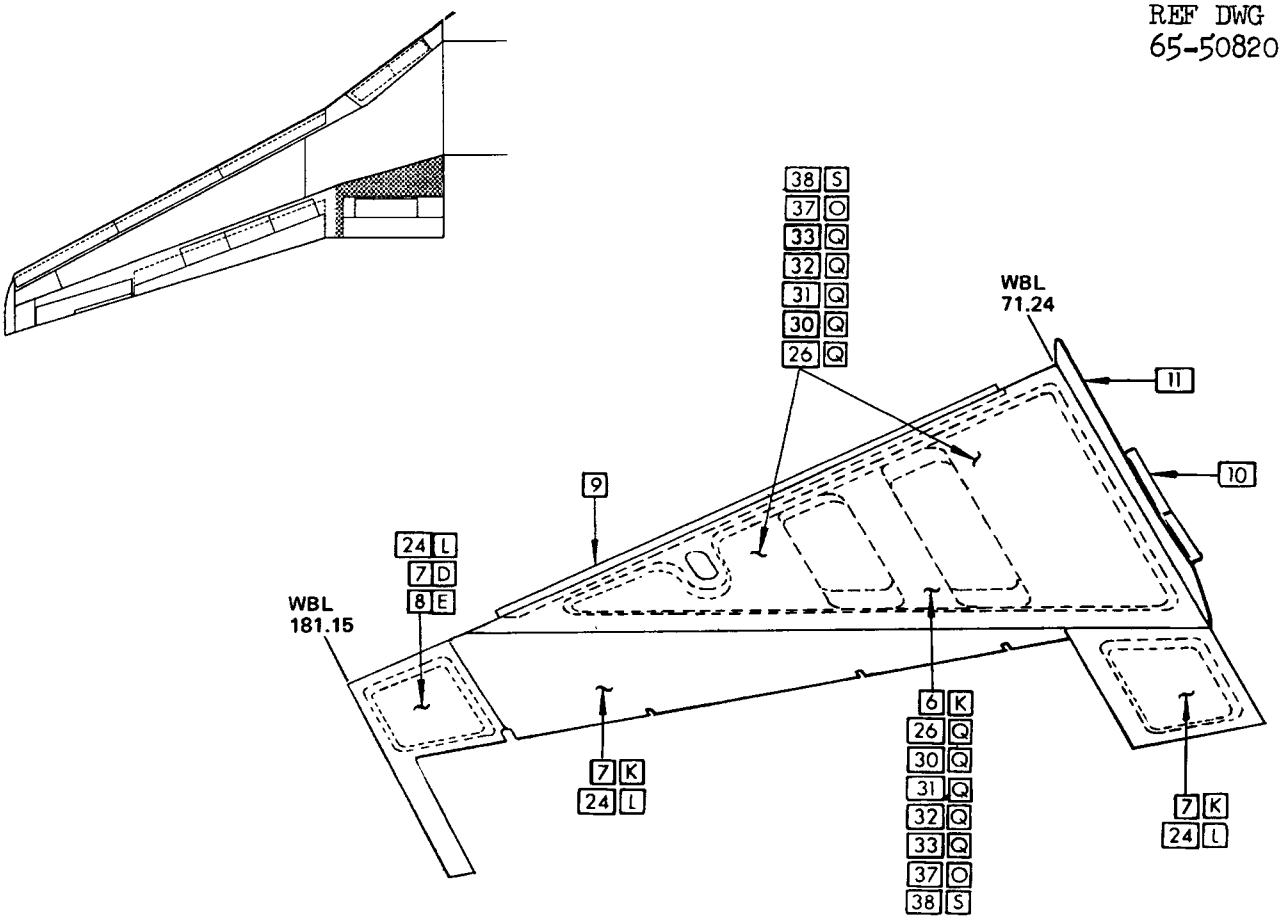

UPPER SURFACE

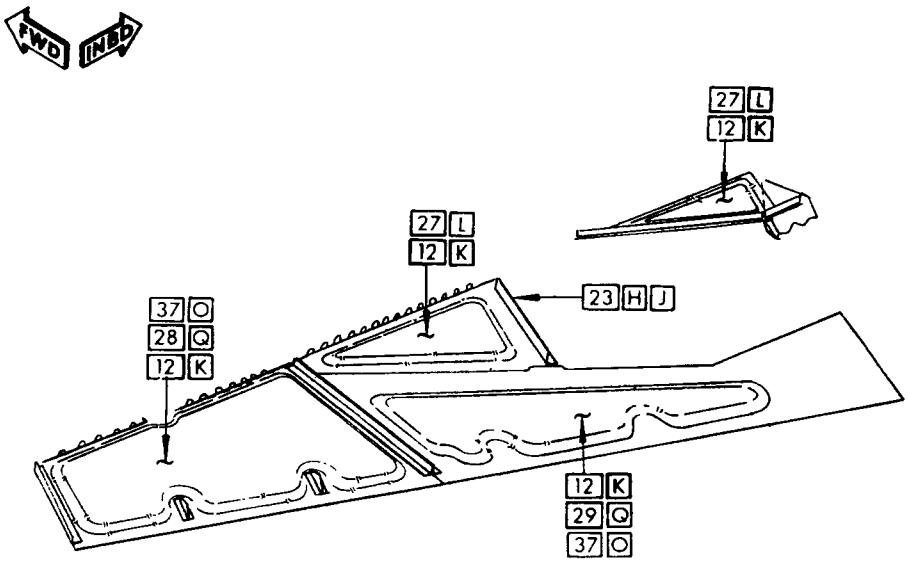

LOWER SURFACE

Wing Trailing Edge Skin Identification
Figure 4 (Sheet 8)

BOEING PROPRIETARY - Copyright © - Unpublished Work - See title page for details.

REF DWG
65-50742

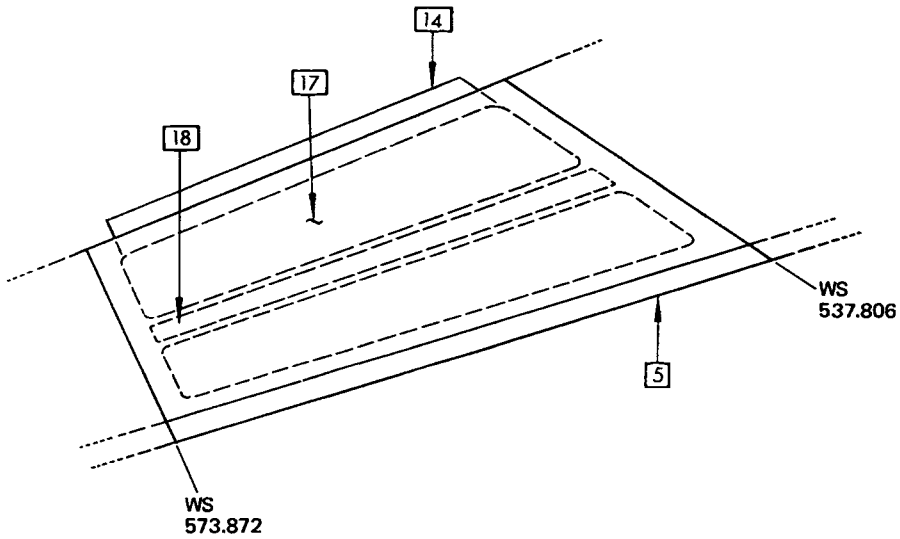

FIXED UPPER SURFACE
DETAIL I

REF DWG
65-50743

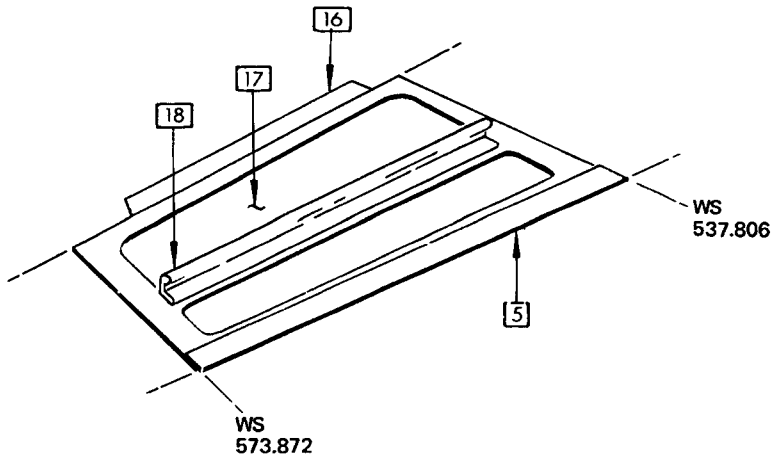

REMOVABLE LOWER SURFACE
DETAIL II

Wing Trailing Edge Skin Identification
Figure 4 (Sheet 9)

BOEING PROPRIETARY - Copyright © - Unpublished Work - See title page for details.

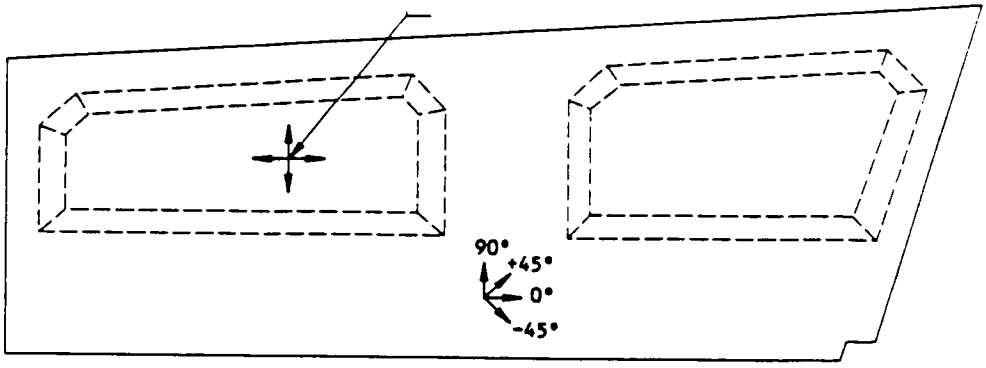

VIEW ON LOWER PANEL AA

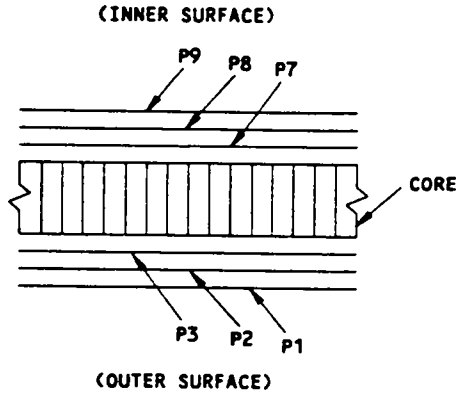

SECTION THRU LOWER PANEL

ITEM	PLY NO.	MATERIAL	PLY ORIENTATION
40	P1,P2,P3,P7,P8,P9	AD	0 OR 90°

PLY TABLE FOR LOWER PANEL AB

DETAIL III

Wing Fixed Trailing Edge Skin Identification
Figure 4 (Sheet 10)

275527

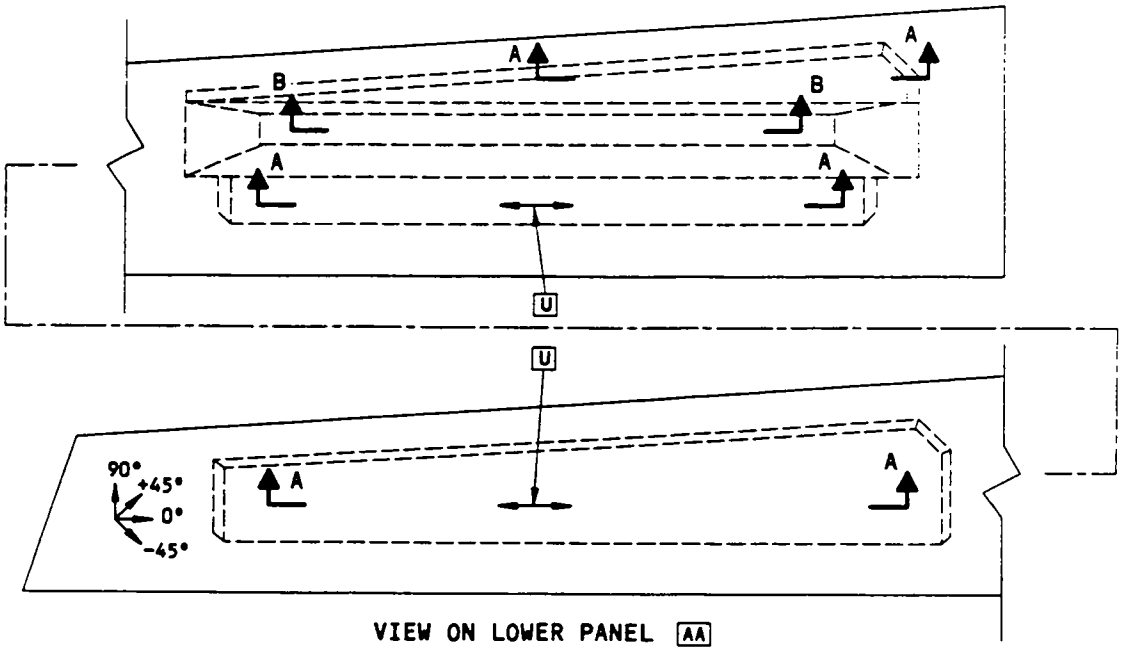

VIEW ON LOWER PANEL AA

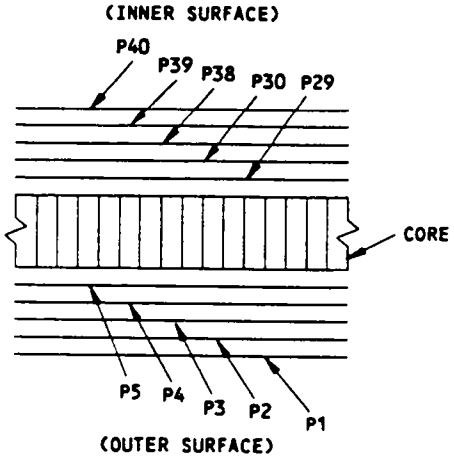

SECTION A-A

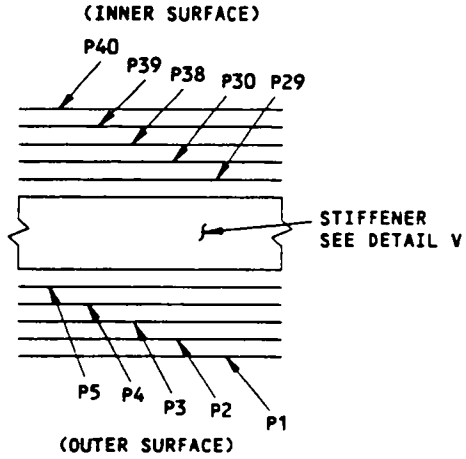

SECTION B-B

ITEM	PLY NO.	MATERIAL	PLY ORIENTATION
41	P1,P3,P38,P40	AD	0 OR 90°
	P2,P39	AD	±45°
	P4,P5,P29,P30	AE	0 OR 90°

PLY TABLE FOR LOWER PANEL AB

DETAIL IV

Wing Fixed Trailing Edge Skin Identification
Figure 4 (Sheet 11)

275528

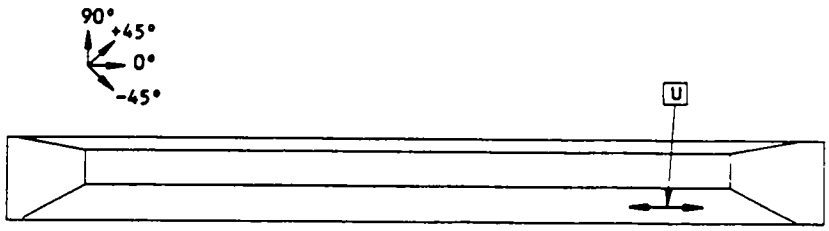

VIEW ON STIFFENER AA

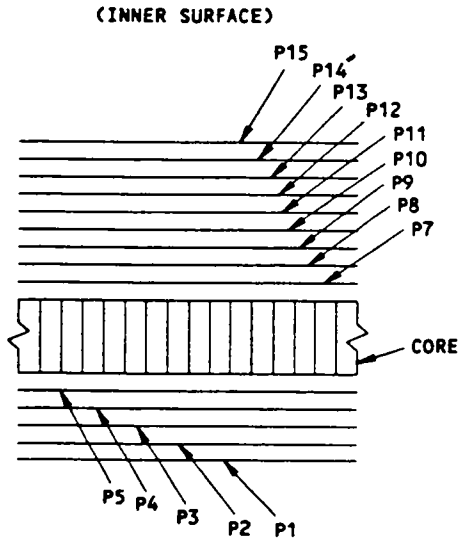

SECTION THRU STIFFENER

ITEM	PLY NO.	MATERIAL	PLY ORIENTATION
(SEE DETAIL IV)	P1 THRU P15	AF	0°

PLY TABLE FOR STIFFENER AB

DETAIL V

Wing Fixed Trailing Edge Skin Identification
Figure 4 (Sheet 12)

275529

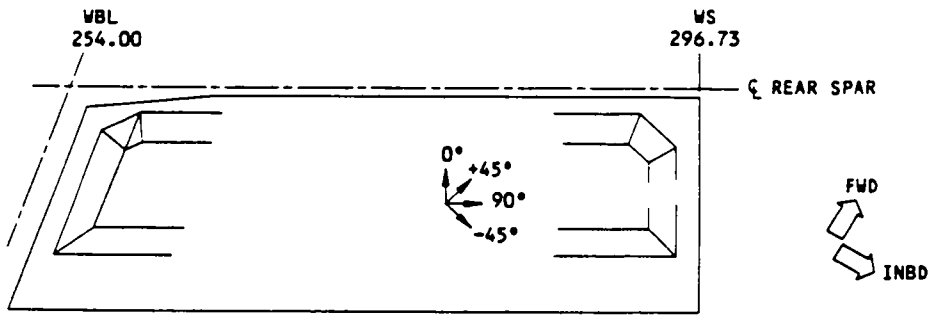

VIEW ON LOWER PANEL [A]

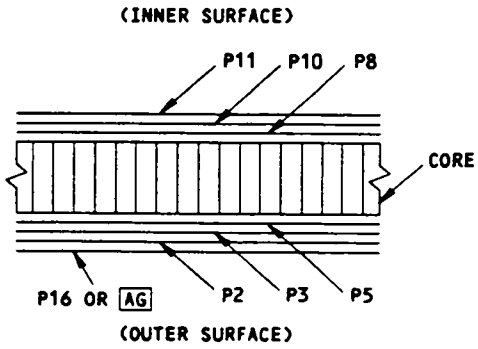

SECTION THRU HONEYCOMB PANEL

ITEM	PLY NO.	MATERIAL	PLY ORIENTATION
7 (DETAIL II)	[AG] [AH]	[AI]	-----
	P16 [AJ]	[AK]	OPTIONAL
	P2,P11	[AL]	0 OR 90°
	P3,P5,P8,P10	[AM]	

PLY TABLE FOR LOWER PANEL

DETAIL VI

Wing Trailing Edge Skin Identification
Figure 4 (Sheet 13)

275530

SERVICE BULLETIN REPAIRS

The following service bulletins contain wing skin repairs which are available for use where specific damage has been encountered. Usually, the service bulletin also covers preventive modification data which operators are encouraged to use to eliminate the need for repair.

DAMAGED AREA	CUM LINE NUMBER EFFECTIVITY [A]	SB NUMBER
FUEL-STORAGE-INTEGRAL FUEL TANKS - WING FUEL TANK ACCESS DOOR REPLACEMENT	ALL BAB AIRPLANES FROM 599 THRU 1105	737-28A1070
WING UPPER SKIN AT REAR SPAR WING BUTTOCK LINE 103.56	1 THRU 1029	737-57-1144
WINGS-MAIN WHEELWELL PRESSURE FLOOR WEB INSPECTION AND MODIFICATION	737-200 AIRPLANES FROM 312 THRU 322, AND 324 THRU 1486	737-57-1234

REPAIR INSTRUCTIONS

1. Trim the damaged skin to form a rectangular cutout parallel to a stringer. Remove all burrs, nicks, sharp edges or corners from the damaged area. Alodize the cutout edge surfaces and all countersunk holes in the skin.
2. Fabricate repair parts [1] and [2]. Alodize the entire surface of part [1] and edges and holes of part [2].
3. Install repair parts.
4. Make a filleted sealant installation per SRM 57-10-3 at fillet between original skin and part [1].
5. Make sealant installation per SRM 57-10-3 at each fastener on the inner surface of the skin.
6. Fill gap with BMS 5-79 aerodynamic smoother per SRM 51-70.
7. Restore finish according to AMM 51-21-0.

NOTES

- THIS REPAIR WILL HAVE AN EFFECT ON THE STRUCTURAL SIGNIFICANT ITEMS (SSI):
  - NUMBER W-16 WHEN INSTALLED NEAR THE FRONT SPAR SPANWISE SPLICE OR REAR SPAR, BUT THE INSPECTIONS ARE STILL APPLICABLE.
  - NUMBER W-41 WHEN INSTALLED NEAR THE STRINGERS IN THE DRY BAY BETWEEN WBL 157 AND WBL 227, BUT THE INSPECTIONS ARE STILL APPLICABLE.

  DO THE INSPECTIONS FOR W-16 AND W-41 AT THE SUBSEQUENT SUPPLEMENTAL STRUCTURAL INSPECTION DOCUMENT (SSID) INSPECTION ON THIS AIRPLANE. REFER TO SRM 51-00-4, FIG. 3 FOR APPLICABLE SSI DATA. [E]

  CAUTION: THIS REPAIR MEETS STATIC STRENGTH REQUIREMENTS; HOWEVER, FATIGUE LIFE WILL BE REDUCED.
- CLOSE REAM HOLES PER SRM 51-30-5.
- SEE SRM 51-30 FOR FASTENER CODE, REMOVAL AND INSTALLATION, HOLE SIZES AND EDGE MARGINS.
- SEE SRM 51-10-2 FOR PROTECTIVE TREATMENT OF METAL.
- BREAK SHARP EDGES 0.03 ALL REPAIR PARTS AND TRIMMED ORIGINAL PARTS.

[A] FASTENER TYPE (SEE TABLE II).

[B] FASTENER SPACING (SEE TABLE II).

[C] FASTENER MARGIN (SEE TABLE II).

[D] THREE TIMES FASTENER DIAMETER.

[E] IF THE FASTENER HOLES ARE NOT COLD WORKED, FATIGUE LIFE WILL BE REDUCED. REFER TO SRM 51-00-4, FIG. 3 FOR THE APPLICABLE SSID INSPECTION THRESHOLD.

FASTENER SYMBOLS

REPAIR FASTENER LOCATION.

REPAIR MATERIAL			
PART		QTY	MATERIAL
[1]	PLATE	1	7178-T6 ONE GAGE GREATER THAN ORIGINAL
[2]	FILLER	1	ANY CLAD AL ALLOY SAME GAGE AS ORIGINAL

TABLE I

Wing Upper Surface Interspar Skin - Typical Repair
Figure 1 (Sheet 1)

BOEING PROPRIETARY - Copyright © - Unpublished Work - See title page for details.

REPAIR FASTENER			
LOCATION	FASTENER [A]	SPACING [B]	EDGE MARGIN [C]
INBOARD OF WBL 114	BACB30GY8	1.30 1.10	0.55
WBL 114 TO W.S. 453	BACB30GY10	1.55 1.40	0.68
OUTBOARD OF W.S. 453	BACB30GY8	1.60 1.40	0.55

TABLE II

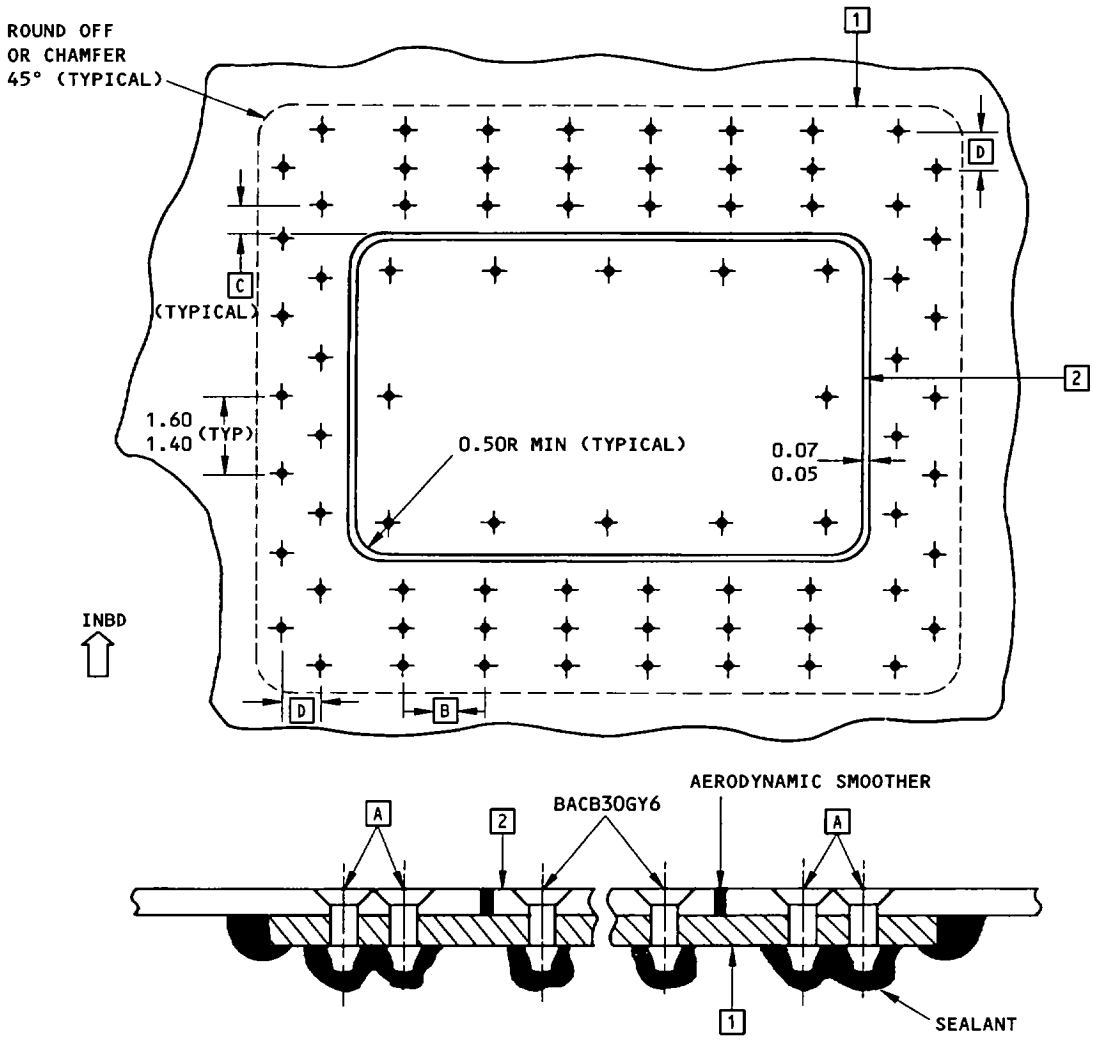

Wing Upper Surface Interspar Skin - Typical Repair
Figure 1 (Sheet 2)

BOEING PROPRIETARY - Copyright © - Unpublished Work - See title page for details.

REPAIR INSTRUCTIONS

1. Trim the damaged skin and stiffener. The cutout in the skin should be rectangular and parallel to a stiffener.
2. Remove all burrs, nicks, sharp edges and corners from the damaged area.
3. Alodize the edge and surface of cutout area and all countersink holes of the skin.
4. Fabricate all repair parts. Alodize repair parts.
5. Install repair parts. Make faying surface seal between repair plate and skin.
6. Reseal for fuel as original and make fillet seal around doubler as given in SRM 57-10-3.
7. Fill gap between skin cutout and filler with BMS 5-79 aerodynamic smoother as given in SRM 51-70.
8. Restore finish according to AMM 51-21-0.

NOTES

- THIS REPAIR MUST NOT BE USED IN THE VICINITY OF MAJOR SKIN OR STIFFENER JOINT OR IN THE AREA OF STEP MACHINED SKIN.
- THIS REPAIR WILL HAVE AN EFFECT ON THE STRUCTURAL SIGNIFICANT ITEMS (SSI):
  - NUMBER W-31 WHEN INSTALLED AT THE RIB LOCATIONS, BUT THE INSPECTION OF THE RIB UPPER CHORD IS STILL APPLICABLE
  - NUMBER W-41 WHEN INSTALLED IN THE DRY BAY BETWEEN WBL 157 AND WBL 227, BUT THE EXTERNAL INSPECTION ALTERNATIVE IS STILL APPLICABLE.

  DO THE INSPECTIONS FOR W-31 AND W-41, IF NECESSARY, AT THE SUBSEQUENT SUPPLEMENTAL STRUCTURAL INSPECTION DOCUMENT (SSID) INSPECTION ON THIS AIRPLANE. REFER TO SRM 51-00-4, FIGURE 3 FOR APPLICABLE SSI DATA.
- THIS REPAIR MEETS STATIC STRENGTH REQUIREMENTS BUT FATIGUE LIFE MAY BE REDUCED.
- NUMBER OF FASTENERS SHOWN ARE MINIMUM FOR EACH SIDE OF DAMAGE.
- SEE SRM 51-30 FOR FASTENER CODE, REMOVAL AND INSTALLATION, HOLE SIZES AND EDGE MARGINS.
- SEE SRM 51-10-2 FOR METAL PROTECTIVE TREATMENT.
- BREAK SHARP EDGES 0.03 ALL REPAIR PARTS AND TRIMMED ORIGINAL PARTS.
- CLOSE REAM HOLES AS GIVEN IN SRM 51-30-5.

[A] GAGE OF SKIN DOUBLER [3] MUST BE AT LEAST ONE GAGE GREATER THAN MAXIMUM LOCAL SKIN THICKNESS.

[B] 7075-T6 MATERIAL MAY BE SUBSTITUTED FOR EXISTING 7178-T6 IN ALL REPAIR PARTS PROVIDED THE GAGE IS INCREASED BY 10% MINIMUM.

[C] THICKNESS OF REPAIR PART [2] TO BE EQUAL TO MAXIMUM LOCAL THICKNESS OF ORIGINAL STIFFENER.

[D] FOR SKIN 0.08 TO 0.15 USE BACB30GY8. FOR SKIN 0.16 AND OVER USE BACB30GY10.

[E] GAGE TO BE EQUAL TO THE DIFFERENCE BETWEEN PART [3] AND ORIGINAL EXTRUSION.

FASTENER SYMBOLS

+ INITIAL FASTENER LOCATIONS.

⊕ REPAIR FASTENER LOCATIONS.

REPAIR MATERIAL			
PART		QTY	MATERIAL
[1]	FILLER	1	2024-T3
[2]	ANGLE	2	7178-T6 EXTRUSION [B] [C]
[3]	DOUBLER	1	7178-T6 [A] [B]
[4]	FILLER	2	2024-T3 CLAD [E]
[5]	FILLER	1	7178-T6

Wing Upper Skin - Repair at Zee Stiffener
Figure 2 (Sheet 1 of 2)

BOEING PROPRIETARY - Copyright © - Unpublished Work - See title page for details.

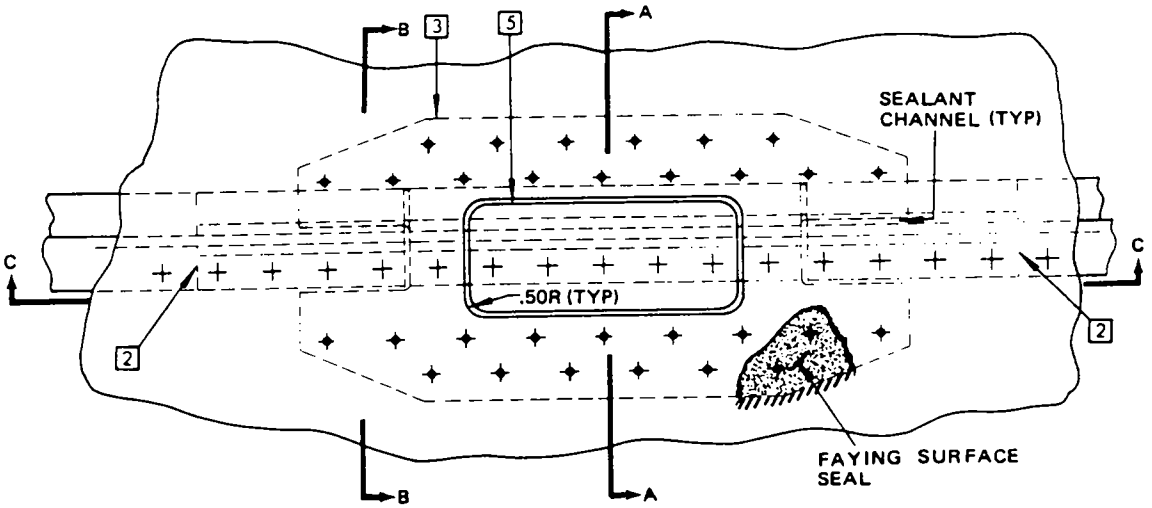

PLAN VIEW

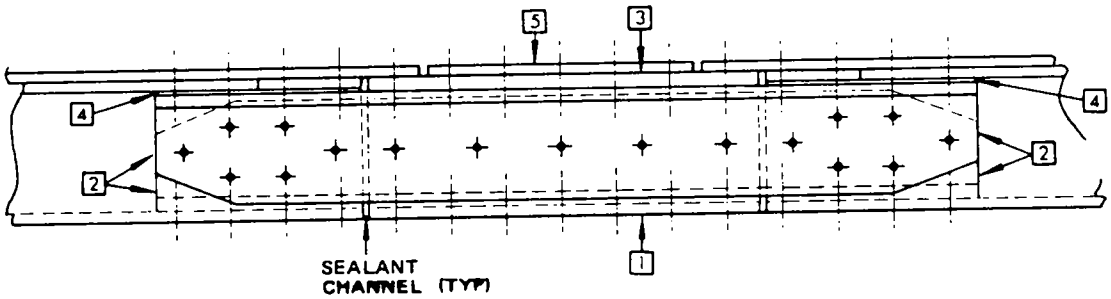

C-C

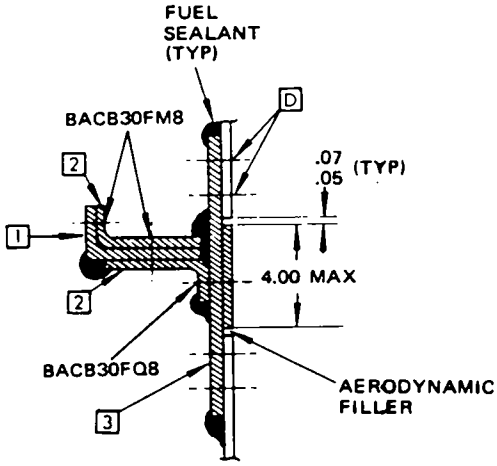

A-A

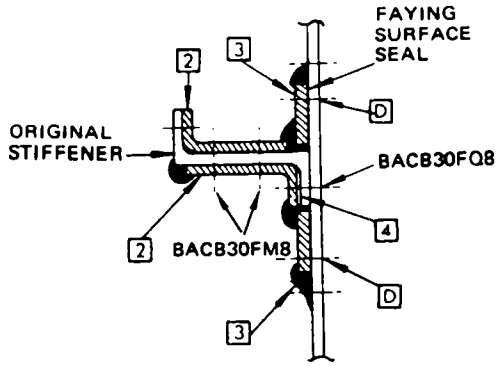

B-B

Wing Upper Skin - Repair at Zee Stiffener
Figure 2 (Sheet 2 of 2)

REPAIR INSTRUCTIONS

1. Clean up damage area.
2. Locate and drill fastener holes. Countersink if required.
3. Remove sharp edges and burrs from cutout and fastener holes.
4. Alodize cutout edges and countersinks.
5. Make repair parts.
6. Alodize all edges and reworked areas of repair parts.
7. Install repair parts.
8. Make a filleted selant installation between original skin and repair parts.
9. Make a sealant installation at each fastener on the inner surface of the repair.
10. Fill gap between skin and filler with aerodynamic smoother BMS 5-79 if required.
11. Restore finish.

NOTES

- THIS REPAIR IS APPLICABLE FOR USE BETWEEN WING SKIN STIFFENERS ON CONSTANT TAPERED SKINS AWAY FROM PAD AREAS. SEE DETAILS I AND II. REFER TO SRM 57-10-2, FIGURE 4 FOR STIFFENER LOCATIONS.

  CAUTION: THIS REPAIR MEETS STATIC STRENGTH REQUIREMENTS; HOWEVER, FATIGUE LIFE WILL BE REDUCED.

- THIS REPAIR WILL HAVE AN EFFECT ON THE STRUCTURALLY SIGNIFICANT ITEM (SSI):
  - NUMBER W-6 AND W-8 WHEN INSTALLED IN THE CENTER WING SECTION BUT THE INSPECTION ALTERNATIVES OF STIFFENER ARE STILL APPLICABLE.
  - NUMBER W-40 WHEN INSTALLED IN THE BAY BETWEEN WBL 157 AND WBL 227; BUT THE INSPECTION ALTERNATIVES OF STIFFENER AND EXTERNAL SKIN ARE STILL APPLICABLE.
  - NUMBER W-42 WHEN INSTALLED IN THE AREA FORWARD OF DRY BAY BETWEEN WBL 157 AND WBL 227; BUT THE INSPECTION ALTERNATIVES OF STIFFENER AND EXTERNAL SKIN AND STIFFENER ARE STILL APPLICABLE.

  DO THE INSPECTIONS FOR W-6, W-8, W-40 AND W-42, IF NECESSARY, AT THE SUBSEQUENT SUPPLEMENTAL STRUCTURAL INSPECTION DOCUMENT (SSID) INSPECTION ON THIS AIRPLANE. REFER TO SRM 51-00-4, FIGURE 3 FOR APPLICABLE SSI DATA. [C]

- CLOSE REAM HOLES ACCORDING TO SRM 51-30-2.
- REFER TO THE FOLLOWING WHEN USING THIS REPAIR:
  - AMM 51-10-2 FOR PROTECTIVE TREATMENT OF METAL
  - AMM 51-21-0 FOR INTERIOR AND EXTERIOR FINISHES
  - SRM 51-30 FOR FASTENER CODE, REMOVAL, INSTALLATION, HOLE SIZES AND EDGE MARGINS
  - SRM 51-70 FOR AERODYNAMIC SMOOTHNESS REQUIREMENTS
  - SRM 57-10-3 FOR FUEL TANK SEALING.
- BREAK SHARP EDGES OF ORIGINAL AND REPAIR PARTS 0.015 TO 0.030.

[A] TAPER 0.03 TO "t".

[B] "t" EQUALS THE MAXIMUM LOCAL SKIN THICKNESS IN THE VICINITY OF THE REPAIR.

[C] IF THE FASTENER HOLES ARE NOT COLD WORKED, IT WILL HAVE AN EFFECT ON THE FATIGUE LIFE AND REDUCE THE INSPECTION THRESHOLD. REFER TO SRM 51-00-4, FIGURE 3 FOR APPLICABLE SSI DATA.

FASTENER SYMBOLS

REPAIR FASTENER LOCATION.

Wing Lower Skin Tapered Plate Repair - Damage Up to 3.00 Inches in Width
Figure 3 (Sheet 1 of 5)

BOEING PROPRIETARY - Copyright © - Unpublished Work - See title page for details.

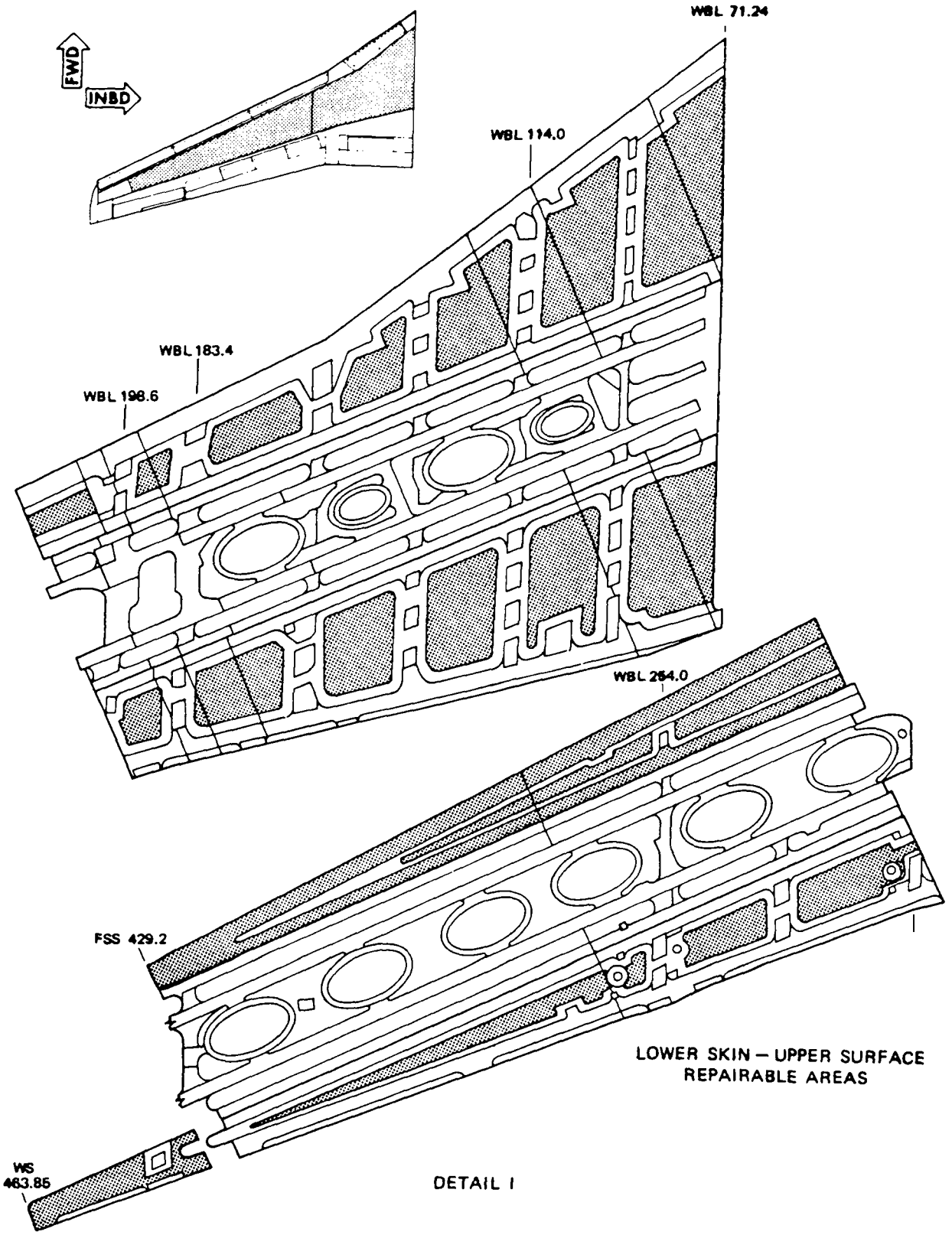

Wing Lower Skin Tapered Plate Repair -
Damage Up to 3.00 Inches in Width
Figure 3 (Sheet 2 of 5)

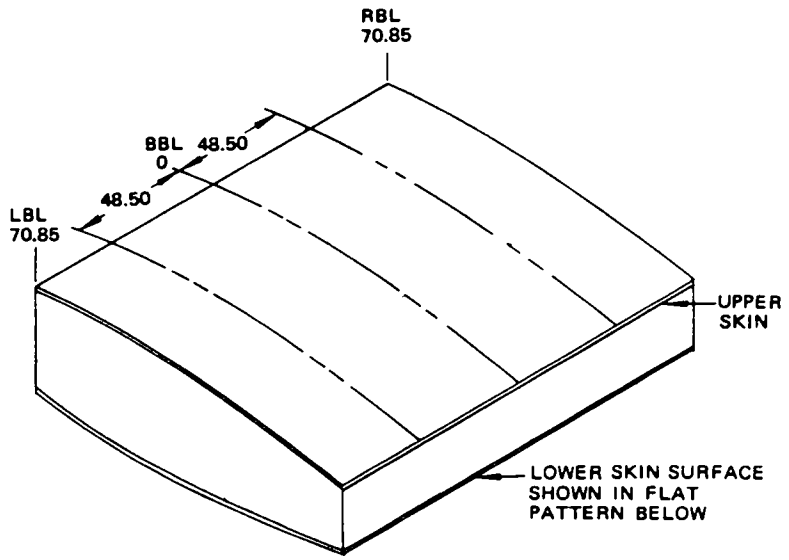

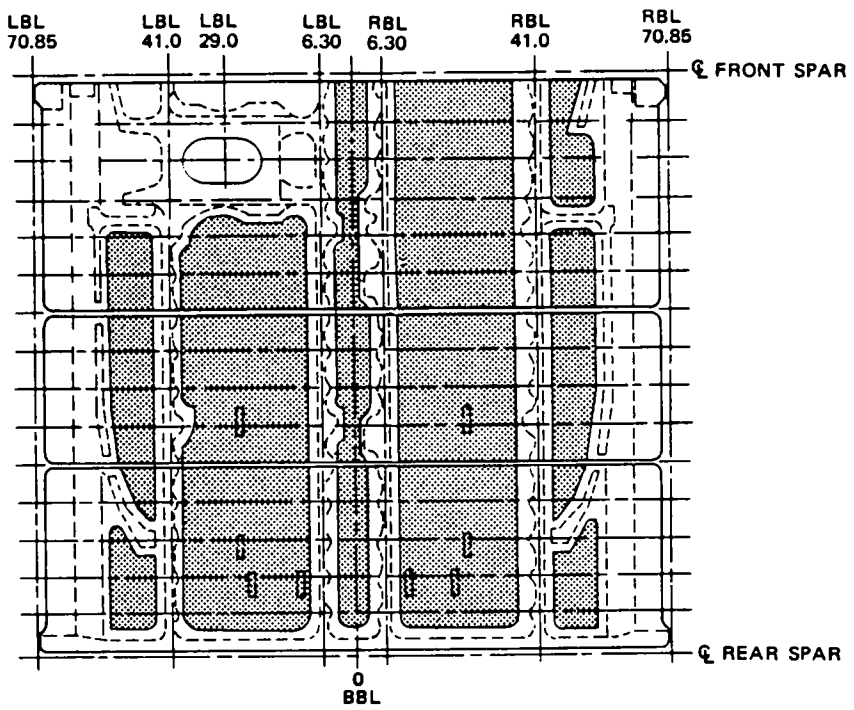

LOWER SKIN — UPPER SURFACE
REPAIRABLE AREAS

DETAIL II

Wing Lower Skin Tapered Plate Repair -
Damage Up to 3.00 Inches in Width
Figure 3 (Sheet 3 of 5)

REPAIR MATERIAL							
LOCATION →		WING CENTER SECTION		INBOARD AND OUTBOARD WING			
PART		QTY	MATERIAL	QTY	MATERIAL	QTY	MATERIAL
1	DOUBLER	1	2024-T3 OR T-4 CLAD SHEET	1	2024-T3 OR T-4 CLAD SHEET		
2	FILLER			1	2024-T3 OR T-4 CLAD SHEET B		
X	FASTENER		BACB30GW6		BACB30GY6		
Y	FASTENER				MS20426D-5		

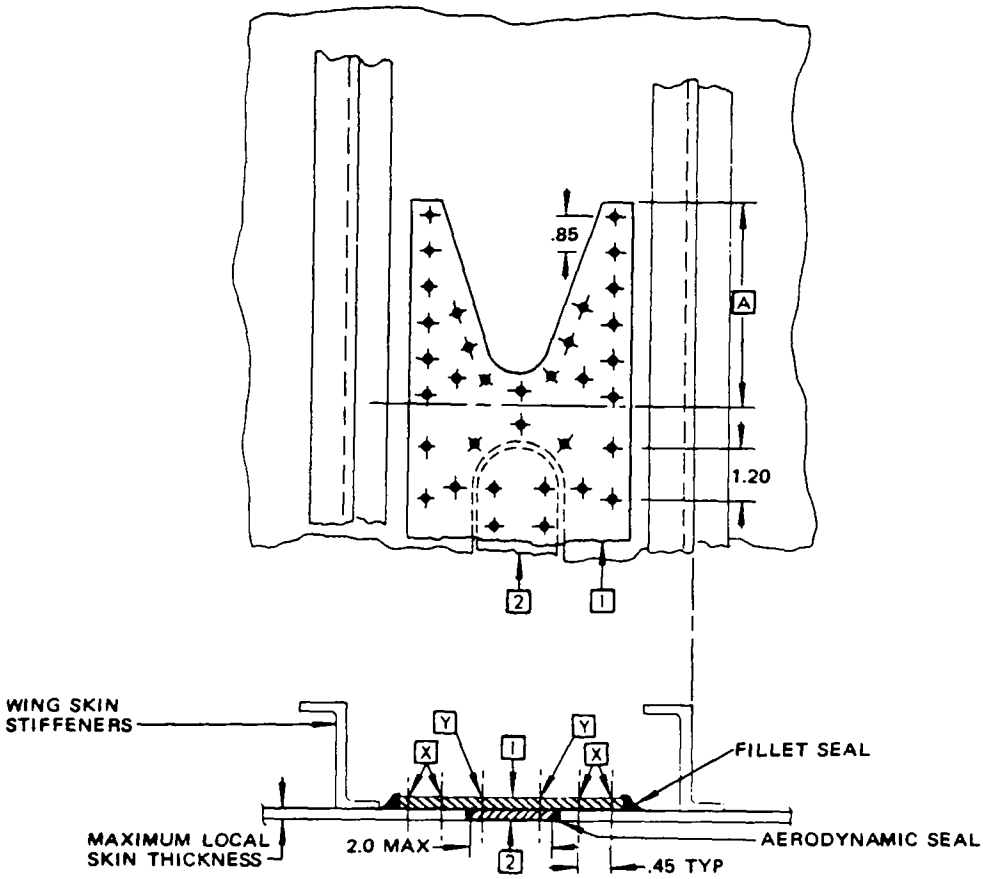

SECTION THROUGH REPAIR

Wing Lower Skin Tapered Plate Repair -
Damage Up to 3.00 Inches in Width
Figure 3 (Sheet 4 of 5)

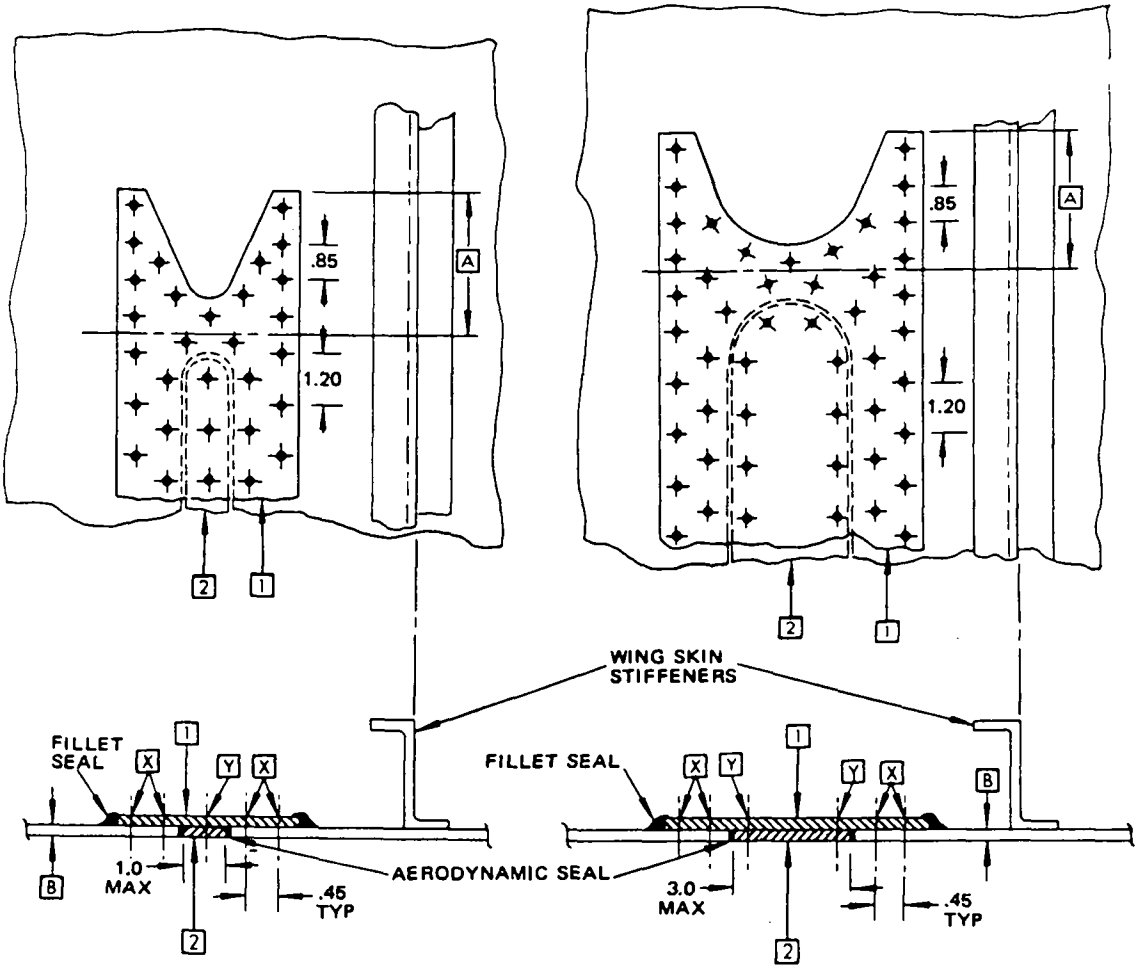

SECTION THROUGH REPAIR

SECTION THROUGH REPAIR

Wing Lower Skin Tapered Plate Repair -
Damage Up to 3.00 Inches in Width
Figure 3 (Sheet 5 of 5)

REPAIR INSTRUCTIONS

1. Clean up damage.
2. Locate, drill and countersink fastener holes.
3. Remove sharp edges and burrs from cutout and fastener holes.
4. Alodize cutout edges and hole countersinks.
5. Make repair parts. Brush alodize all trimmed edges and holes of repair parts.
6. Install repair parts.
7. Make a filleted sealant installation between original skin and repair parts.
8. Make a sealant installation at each fastener on inner surface of repair.
9. Fill gap between skin and filler with BMS 5-79.
10. Restore finish.

NOTE

- SEE 57-30-3, FIGURE 3 FOR REPAIRABLE AREAS OF LOWER SKIN SURFACE.

  CAUTION: THIS REPAIR MEETS STATIC STRENGTH REQUIREMENTS; HOWEVER, FATIGUE LIFE WILL BE REDUCED.

- CLOSE REAM HOLES ACCORDING TO 51-30-2.
- REFER TO THE FOLLOWING WHEN USING THIS REPAIR:

51-30 FOR FASTENER CODE, REMOVAL INSTALLATION, HOLE SIZES AND EDGE MARGINS.

51-10-2 FOR PROTECTIVE TREATMENT OF METAL.

51-70 FOR AERODYNAMIC SMOOTHNESS REQUIREMENTS.

57-10-3 FOR FUEL TANK SEALING.

51-21-0 OF THE 737 MAINTENANCE MANUAL FOR INTERIOR AND EXTERIOR FINISHES.

BREAK SHARP EDGES OF ORIGINAL AND REPAIR PARTS .015 TO .030.

✦ REPAIR FASTENER LOCATION

+ ORIGINAL FASTENER LOCATION

[A] "T" EQUALS THE MAXIMUM LOCAL SKIN THICKNESS IN THE VACINITY OF THE REPAIR.

[B] ADD AN EXTRA ROW OF FASTENERS WHEN .65 IS EXCEEDED.

[C] PICK UP EXISTING FASTENERS.

[D] APPLY SEALANT BMS 5-26 CLASS B PR1422-B-2 TO COUNTERSUNK HEADS AND SHANKS WITHIN THE POT LIFE OF THE SEALANT.

[E] USE .05 GAGE FOR SKIN EQUAL TO OR LESS THAN .17.
FOR SKIN GAGE GREATER THAN .17 ADD THE DIFFERENCE TO .05.

EXAMPLE:
SKIN THICKNESS .20 - .17 = .03.
SKIN GAGE REQUIRED .03 + .05 = .08.

TO LOCATE REPAIR SELECT NEAREST FASTENER IN LINE WITH THE END OF DAMAGE CLEAN-UP AS ILLUSTRATED.

Wing Lower Skin Multiple Plate Repair - Damage Up to 3.00 Inches in Width
Figure 4 (Sheet 1 of 3)

REPAIR MATERIAL							
LOCATION →		WING CENTER SECTION		INBD AND OUTBD WING			
PART		QTY	MATERIAL	QTY	MATERIAL		
1	FILLER			1	CLAD SHEET 2024-T3		
2	PLATE	1	CLAD SHEET E 2024-T3	1	CLAD SHEET E 2024-T3		
3	PLATE	1	.05 CLAD SHEET 2024-T3	1	.05 CLAD SHEET 2024-T3		
4	PLATE	1	.04 CLAD SHEET 2024-T3	1	.04 CLAD SHEET 2024-T3		
5	PLATE	1	.04 CLAD SHEET 2024-T3	1	.04 CLAD SHEET 2024-T3		
6	PLATE	2	.04 CLAD SHEET 2024-T3	2	.04 CLAD SHEET 2024-T3		
7	PLATE	2	.04 CLAD SHEET 2024-T3	2	.04 CLAD SHEET 2024-T3		
8	PLATE	2	.032 CLAD SHEET 2024-T3	2	.032 CLAD SHEET 2024-T3		
X	FASTENER	AS REQD	BACB30GW6		BACB30GY6		
Y	FASTENER	AS REQD			MS20426D-5		

Wing Lower Skin Multiple Plate Repair -
Damage Up to 3.00 Inches in Width
Figure 4 (Sheet 2 of 3)

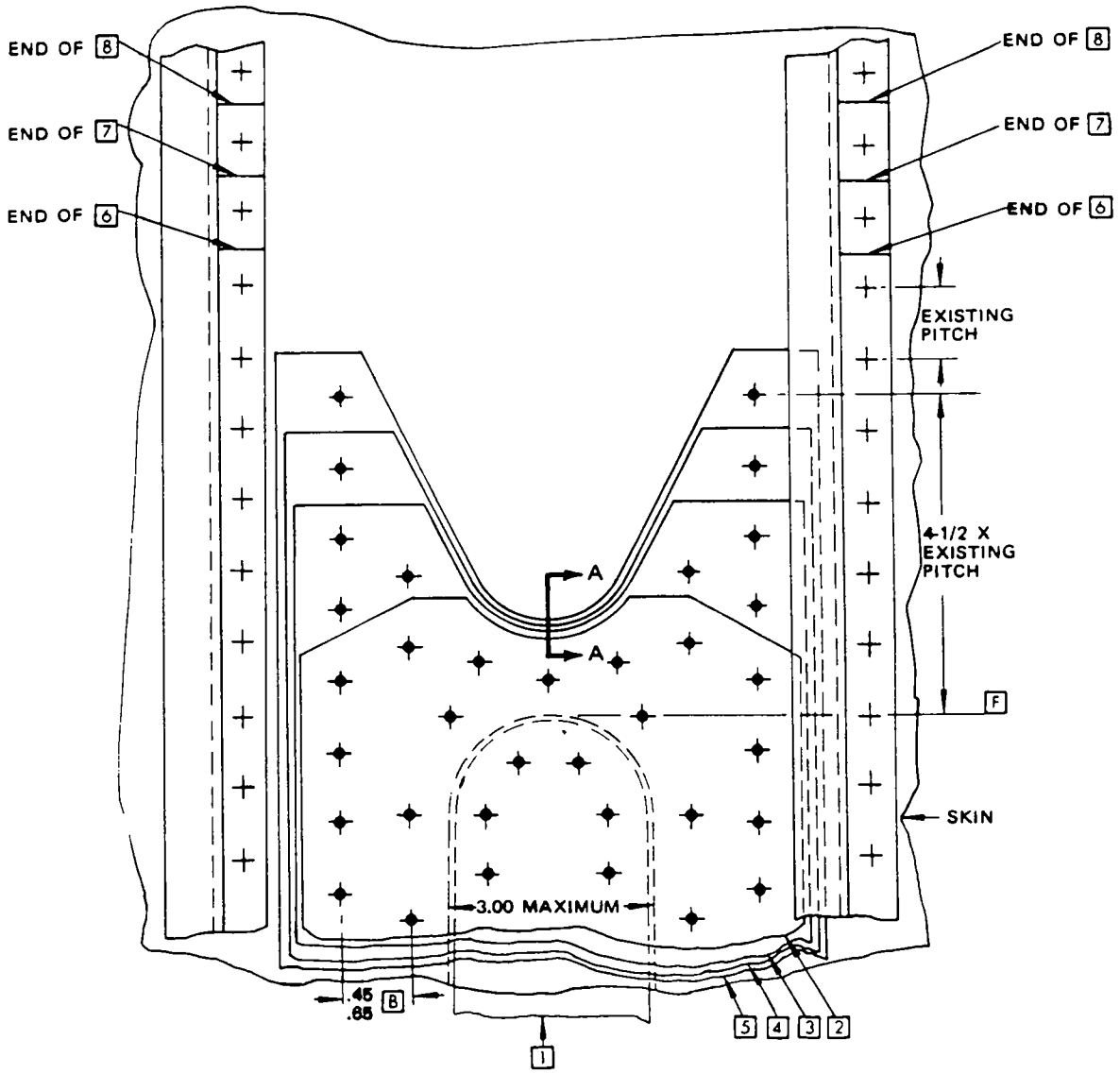

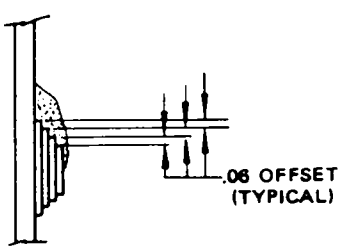

SECTION A-A

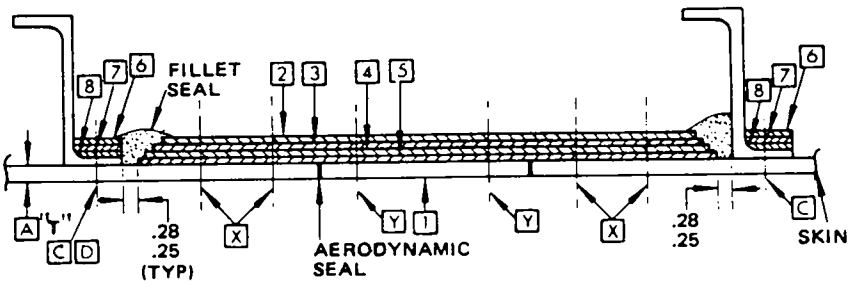

SECTION THROUGH REPAIR

Wing Lower Skin Multiple Plate Repair -
Damage Up to 3.00 Inches in Width
Figure 4 (Sheet 3 of 3)

REPAIR INSTRUCTIONS

WARNING: FAILURE TO PURGE AND VENTILATE THE FUEL TANKS WILL RESULT IN HAZARDOUS AND EXPLOSIVE FUEL VAPORS.

1. Purge and ventilate the fuel tanks in the repair area. Refer to AMM 28-11-00.
2. Remove the fuel tank access door.
3. Clean the edge of the skin cutout, and the door and wing skin lower surfaces which contact the clamp ring.
4. Remove damage at the edge of the skin cut-out per Details I and II [C]. See Detail IV for electrical bonding requirements [A].
5. Remove corrosion and fretting damage on the milled step of the skin and fuel tank access door per Details I and III [C]. Do not fill the blendouts. See Detail IV for electrical bonding requirements [A].
6. Do a 10X visual inspection of the reworked area to make sure that all of the corroded material is removed. As an alternative, do a penetrant inspection. Refer to SOPM 20-20-02.
7. Shot peen the damaged area using self contained equipment (3M's TC330 flap and an intensity of 0.004A to 0.007A, coverage 2.0). As an alternative, shot peen the damaged area using standard shot peening equipment (No. 170 to 550 cast shot or 20 to 62 cut wire shot and an intensity of 0.004A to 0.007A, coverage 1.0 automatic or 2.0 manual peening). As an alternative to metal shot, you can use dry glass beads. Use the same intensity and coverage as metal shot. Refer to SOPM 20-10-03.
8. Sand reworked areas to a surface finish of 63 microinches AA. Do not sand below peen valleys.
9. Apply a chemical conversion coating to the reworked surfaces. Refer to SRM 51-20-01.
10. Apply one coat of BMS 10-20, Type II primer to the reworked surfaces. Refer to Detail IV [E] and AMM 28-11-00.
11. Perform a visual inspection to make sure that 50% of the bond perimeter between the fuel tank access door, clamp ring, and the wing lower skin remains intact. See Detail IV [A].

NOTES

- THIS REPAIR COULD HAVE AN EFFECT ON A STRUCTURALLY SIGNIFICANT ITEM (SSI) GIVEN IN SRM 51-00-4, FIG.3. BUT, NO CHANGE TO THE SUPPLEMENTAL STRUCTURAL INSPECTION DOCUMENT (SSID) INSPECTION PROGRAM IS NECESSARY.
- REFER TO SRM 57-00-00 FOR FUEL TANK ACCESS DOOR LOCATIONS
- REFER TO THE FOLLOWING WHEN USING THIS REPAIR:
  - AMM 28-11-00 FOR INTEGRAL FUEL TANK FINISHES
  - AMM 51-21 FOR INTERIOR AND EXTERIOR FINISHES
  - SOPM 20-10-03, D6-51702, FOR SHOT PEENING
  - SOPM 20-20-02, D6-51702, FOR PENETRANT INSPECTION METHODS
  - SRM 51-10-1 FOR INVESTIGATION AND CLEANUP OF DAMAGE
  - SRM 51-10-2 FOR PROTECTIVE TREATMENT OF METAL
  - SRM 51-70 FOR AERODYNAMIC SMOOTHNESS REQUIREMENTS.

[A] THE FUEL TANK ACCESS DOOR MUST BE ELECTRICALLY BONDED TO THE WING SKIN TO PREVENT DIRECT LIGHTNING ATTACHMENT CURRENT FROM CAUSING ARCING IN THE FUEL TANK

[B] THE REPAIR OF A FUEL TANK ACCESS DOOR WITH DAMAGE AT THE DOOR-SKIN FAYING SURFACE SHOWN IN DETAIL I IS NOT ALLOWED. THE DAMAGED DOOR MUST BE REPLACED WITH A NEW DOOR

[C] REPAIRS TO COMPOSITE DOORS ARE NOT ALLOWED. A DAMAGED COMPOSITE DOOR MUST BE REPLACED WITH A NEW COMPOSITE DOOR

[D] A NEW KNITTED ALUMINUM GASKET (PART NO. 65C33095-XX OR 65C33161-XX) MUST BE INSTALLED WITH AERO SHELL NO. 14 GREASE IMPREGNATED INTO THE GASKET CONTINUOUSLY AND EVENLY THROUGHOUT THE KNIT. DO NOT RE-USE THE EXISTING GASKET

[E] DO NOT APPLY PRIMER TO THE LOWER SURFACE OF THE DOOR OR LOWER SKIN, OR THE UPPER SURFACE OF THE CLAMP RING IN THIS AREA (TYPICAL AROUND THE SKIN CUTOUT AND THE DOOR). IF PRIMER IS APPLIED IN THIS AREA, IT MUST BE REMOVED. THE UNPRIMED SURFACES ARE REQUIRED FOR ELECTRICAL BONDING

Wing Skin Lower Surface - Corrosion Repair at Fuel Tank Access Door Cutouts
Figure 5 (Sheet 1)

BOEING PROPRIETARY - Copyright © - Unpublished Work - See title page for details.

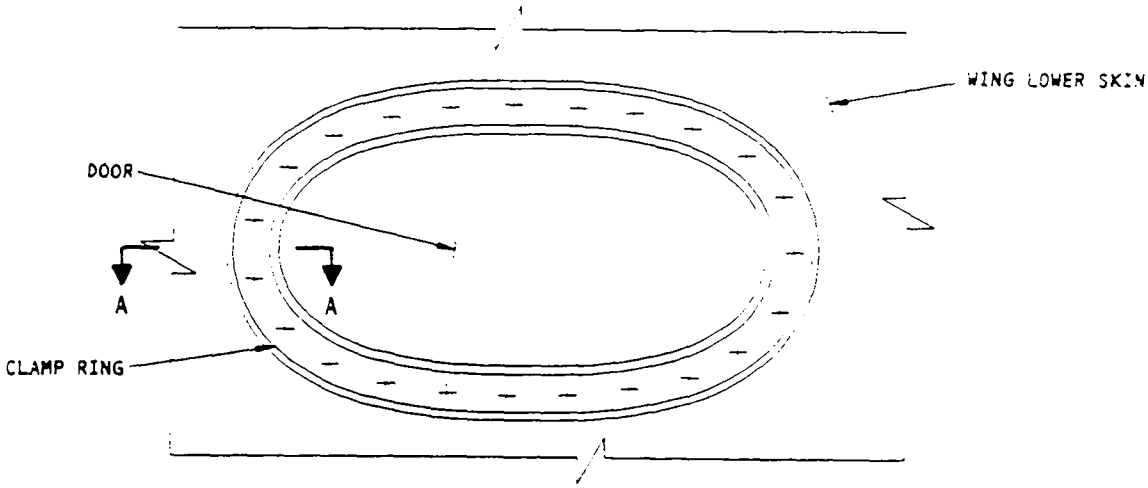

BOTTOM VIEW
DOOR, SKIN, AND CLAMP RING

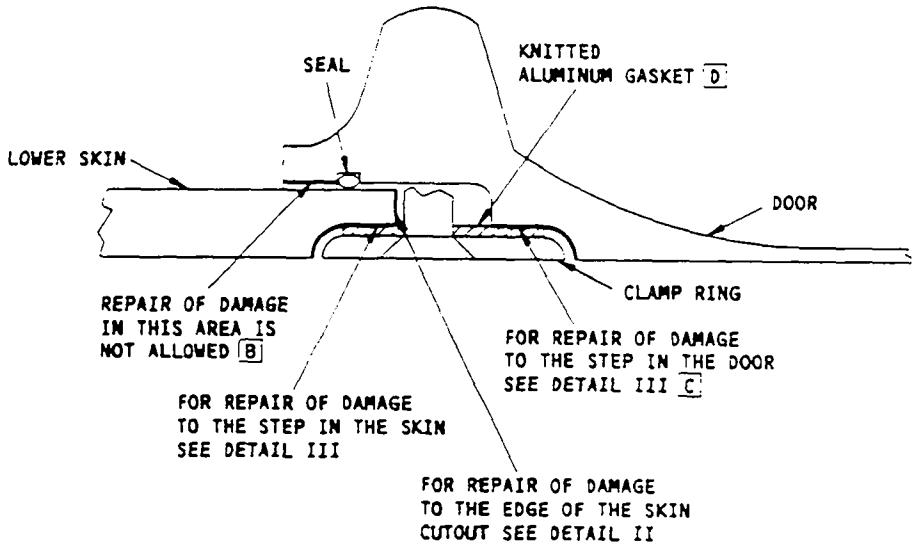

SECTION A-A

NOTE: FOR DAMAGE TO THE DOOR IN AREAS NOT SHOWN CONTACT THE BOEING COMPANY FOR ALLOWABLE DAMAGE LIMITS. C

SEE DETAIL IV FOR ELECTRICAL BONDING REQUIREMENTS.

FUEL TANK ACCESS DOOR
DETAIL I

Wing Skin Lower Surface - Corrosion Repair at Fuel Tank Access Door Cutouts
Figure 5 (Sheet 2)

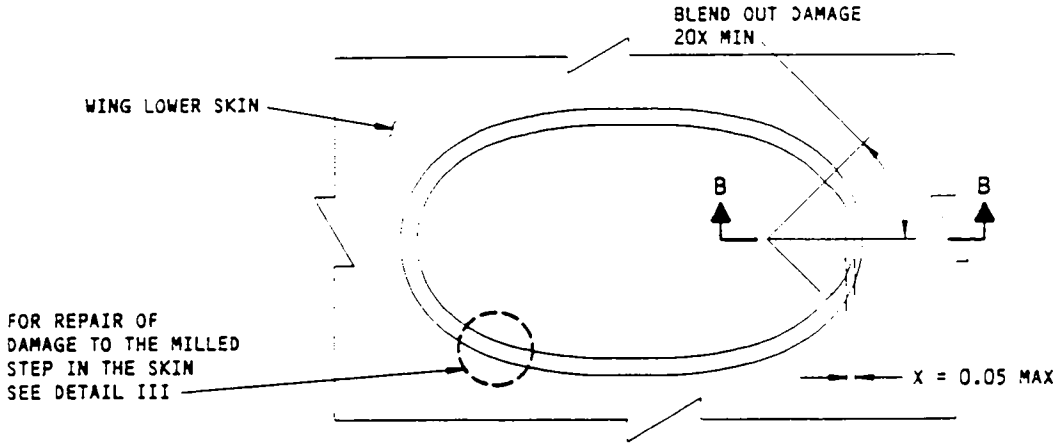

BOTTOM VIEW - DOOR NOT SHOWN

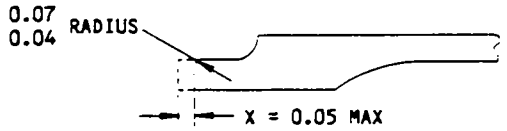

TYPICAL BLENDOUT AROUND DOOR CUTOUT PERIPHERY
SECTION B-B

DAMAGE REMOVAL AT THE EDGE OF THE SKIN CUTOUT
DETAIL II

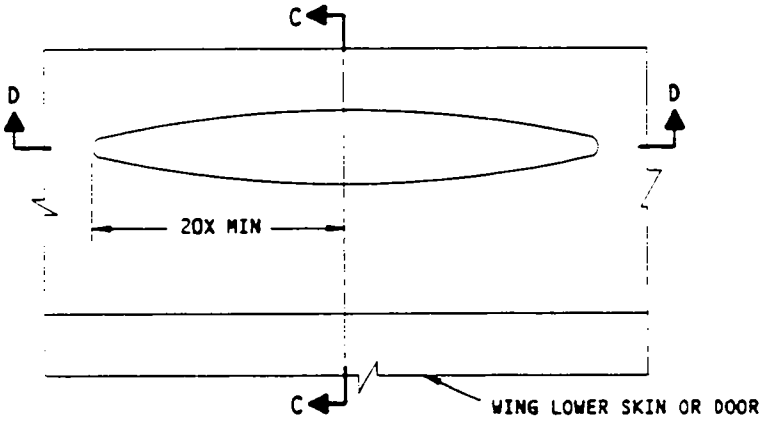

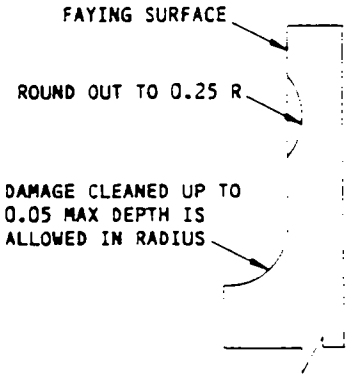

SECTION C-C

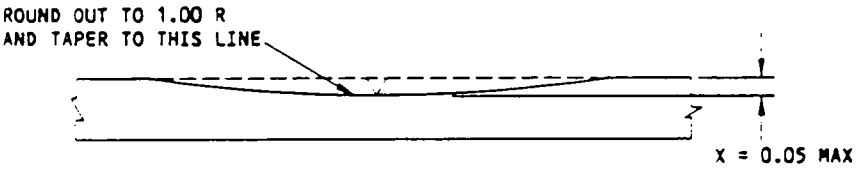

SECTION D-D

DAMAGE REMOVAL ON THE MILLED STEP IN THE SKIN OR IN THE ACCESS DOOR
DETAIL III C

Wing Skin Lower Surface - Corrosion Repair at Fuel Tank Access Door Cutouts
Figure 5 (Sheet 3)

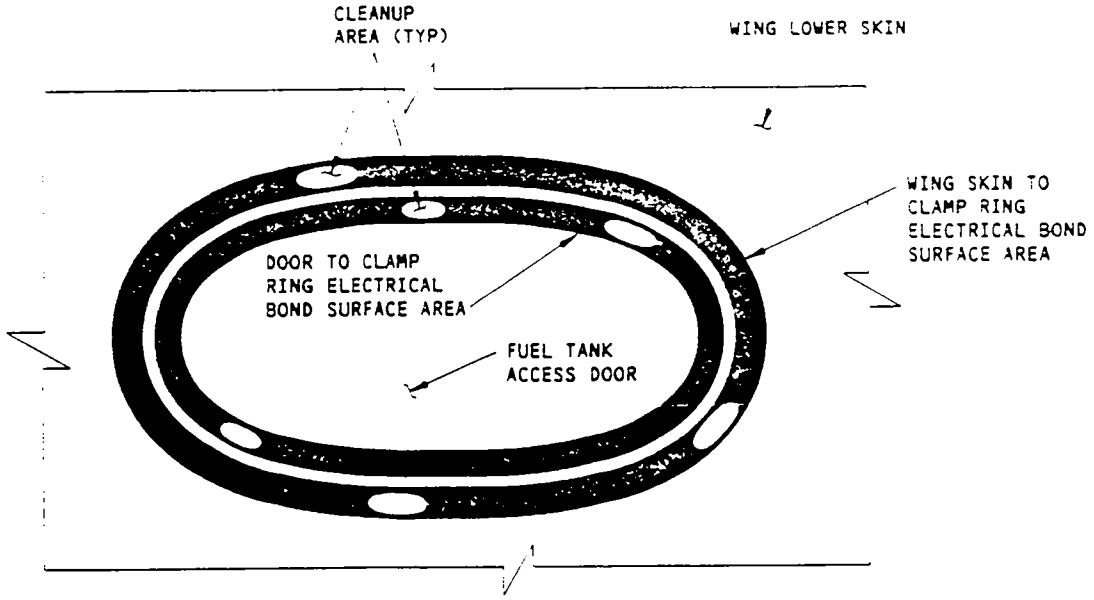

NOTE: 50% OF EACH ELECTRICAL BOND SURFACE AREA MUST REMAIN INTACT. FOR ELECTRICAL BOND SURFACE AREA LOSS GREATER THAN 50%, CONTACT THE BOEING COMPANY.

BOTTOM VIEW - CLAMP RING NOT SHOWN

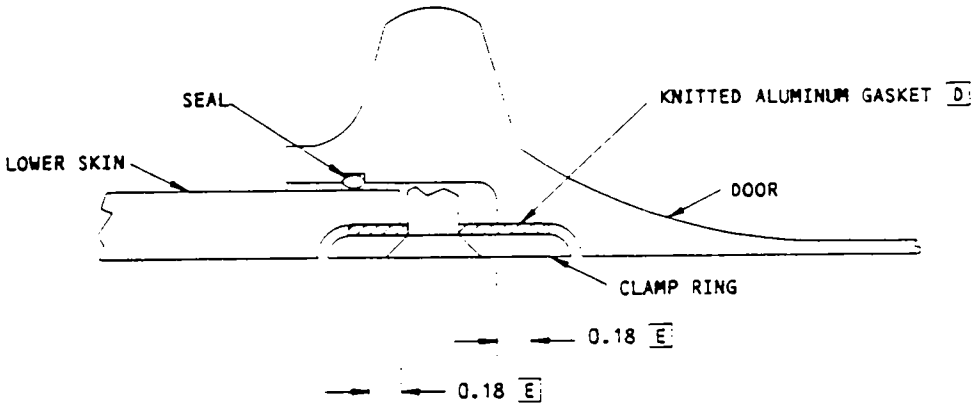

REQUIREMENTS FOR ELECTRICAL BONDING
DETAIL IV A

Wing Skin Lower Surface - Corrosion Repair at Fuel Tank Access Door Cutouts
Figure 5 (Sheet 4)

REPAIR INSTRUCTIONS

1. Remove the boost pump access door. Refer to AMM 57-30-11.
2. Remove the access door latch rub strips if necessary. Refer to Detail I.
3. Clean the edge of the lower skin cutout, and the area of the wing lower skin surface that contacts the access door. Refer to AMM 28-11-0.
4. Remove the damage from the edge of the lower skin cutout or from the lower skin surface that contacts the access door. Refer to Details I through III and SRM 51-10-1.
5. Do a 10X visual inspection of the reworked area to make sure that all of the corrosion has been removed. As an alternative, do a liquid penetrant inspection. Refer to SOPM 20-20-02.
6. Shot peen the damaged area. Use self-contained equipment (3M'S TC330 flap and intensity of 0.004A to 0.007A, coverage 2.0). As an alternative, shot peen the damaged area with standard shot peening equipment (No. 170 to 550 cast shot or 20 to 62 cut wire shot, and an intensity of 0.004A to 0.007A, coverage 1.0 automatic or 2.0 manual peening). As an alternative to metal shot, you can use dry glass beads. Use the same intensity and coverage as metal shot. Refer to SOPM 20-10-03.
7. Sand reworked areas to a surface finish of 63 microinches Ra or smoother. Do not sand below the peen valleys. Refer to SRM 51-20-07.
8. Measure the depth of the reworked area. If the depth is more than 0.020 inch, go to Step 14.
9. Apply a chemical conversion coating to the reworked area. Refer to SRM 51-10-2.
10. Fill the reworked area with BMS 5-26, Type II sealant.
11. After the sealant has dried, sand the sealant so that it is level with the skin.
12. Make the Part 2 (Rub Strip). Refer to Table I.
13. Remove the sharp edges from the Part 2 (Rub Strip). Go to Step 17.
14. If the depth of the reworked area is more than 0.020 inch, make the repair parts. Refer to Table I. Make the Part 1 (Filler) to match the shape and size of the material that was removed.
15. Remove sharp edges from the repair parts and the lower skin.
16. Apply a chemical conversion coating to the Part 1 (Filler) and the bare surfaces of the lower skin.
17. Install the repair parts with BMS 5-26, Type II sealant.
18. Apply one layer of BMS 10-20, Type II primer to the reworked surfaces and parts. Refer to SOPM 20-41-02.
19. Apply a layer of BMS 3-26 corrosion inhibiting compound to the inner surface of the reworked wing skin area. Refer to SRM 51-10-2.
20. Install the door. Make sure the function of the access door work properly. Refer to AMM 57-30-11.

NOTES

THIS REPAIR COULD HAVE AN EFFECT ON STRUCTURALLY SIGNIFICANT ITEM (SSI) W-25 GIVEN IN SRM 51-00-4, FIGURE 3. BUT, NO CHANGE TO THE SUPPLEMENTAL STRUCTURAL INSPECTION DOCUMENT (SSID) INSPECTION PROGRAM IS NECESSARY.

- WHEN YOU USE THIS REPAIR, REFER TO:
  - AMM 28-11-0 FOR INTEGRAL FULL TANKS
  - AMM 51-21 FOR INTERIOR AND EXTERIOR FINISHES
  - AMM 57-30-11 FOR BOOST PUMP ACCESS PANEL REMOVAL/INSTALLATION
  - SOPM 20-10-03 FOR SHOT PEENING
  - SOPM 20-41-02 FOR APPLICATION OF FINISHES
  - SRM 51-10-1 FOR INVESTIGATION AND CLEANUP OF DAMAGE
  - SRM 51-10-2 FOR PROTECTIVE TREATMENT OF METAL
  - SRM 51-10-6 FOR CORROSION REMOVAL, GENERAL REPAIRS AND SURFACE FINISHING REQUIREMENTS
  - SRM 51-10-8 FOR SHOT PEENING
  - SRM 51-20-1 FOR INSTALLATION OF SHIMS
  - SRM 51-20-4 FOR REPAIR SEALING.

REPAIR MATERIAL			
PART		QTY	MATERIAL
1	FILLER	1	2024-T3 OR T42 SHEET OR LAMINATED SHIM
2	RUB STRIP	1	PHENOLIC SHEET, 0.020 THICK

TABLE I

Wing Skin Lower Surface - Fuel Tank Boost Pump Access Door Cutout Repair
Figure 6 (Sheet 1)

BOEING PROPRIETARY - Copyright © - Unpublished Work - See title page for details.

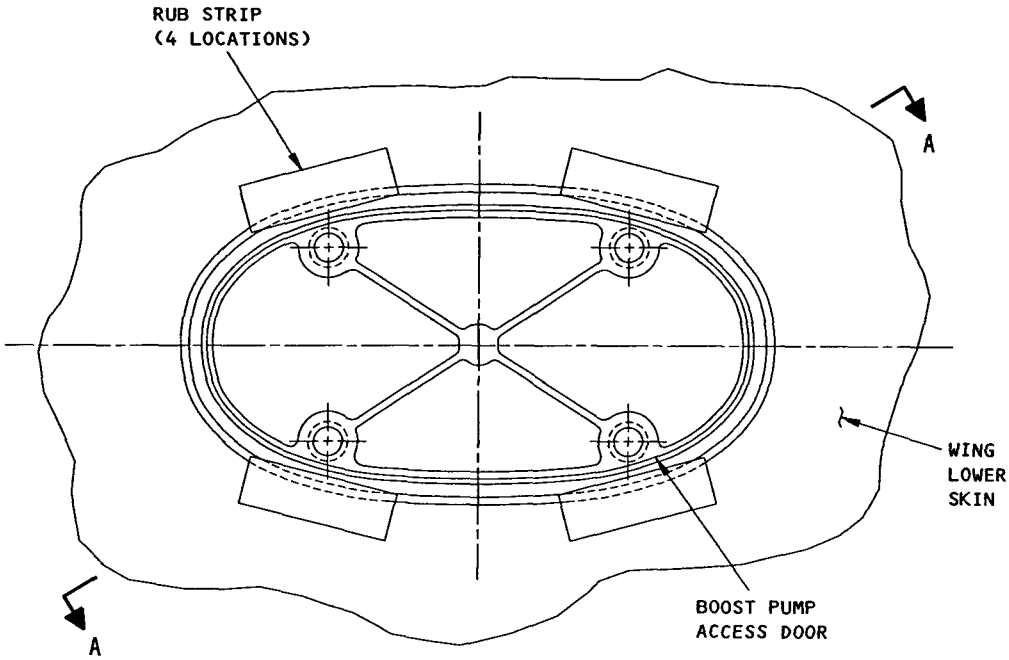

DETAIL I

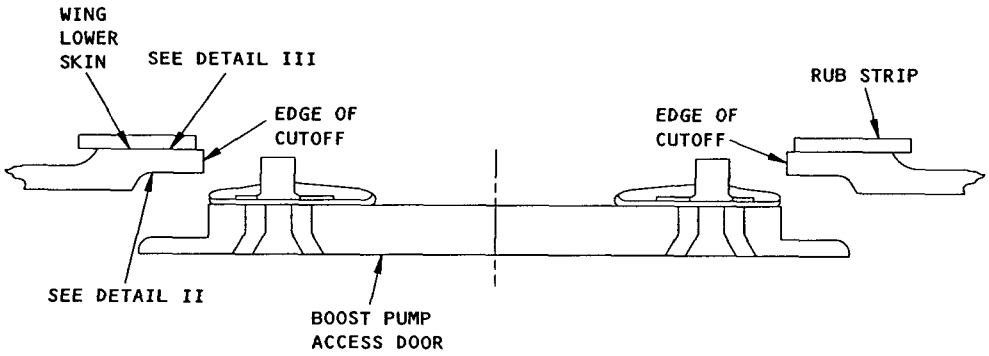

ROTATED 32° CLOCKWISE

SECTION A-A

Wing Skin Lower Surface - Fuel Tank Boost Pump Access Door Cutout Repair
Figure 6 (Sheet 2)

BOEING PROPRIETARY - Copyright © - Unpublished Work - See title page for details.

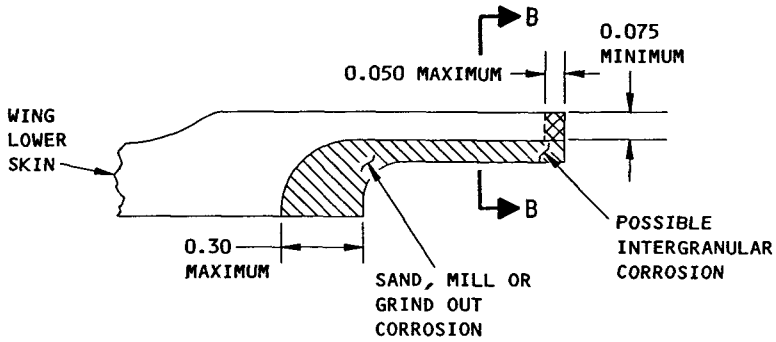

CORROSION REMOVAL AT DOOR CUTOUT AND DOOR LANDING AREA
DETAIL II

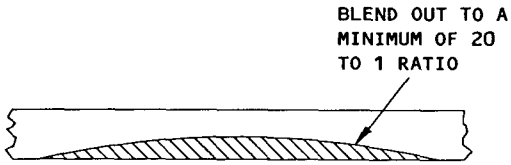

SECTION B-B

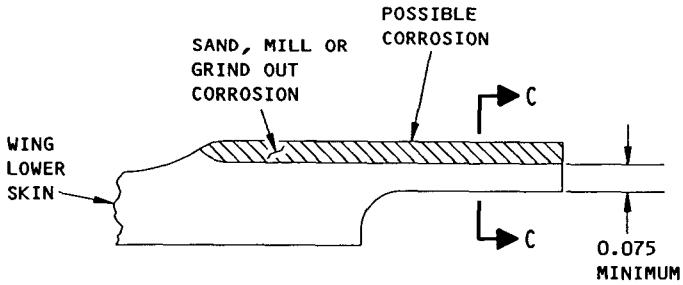

CORROSION REMOVAL AT DOOR LATCH RUB STRIP AREA
DETAIL III

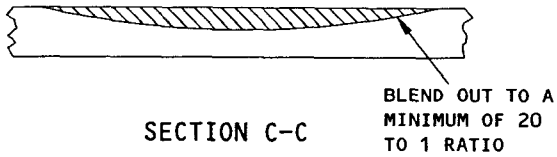

SECTION C-C

Wing Skin Lower Surface - Fuel Tank Boost Pump Access Door Cutout Repair
Figure 6 (Sheet 3)

BOEING PROPRIETARY - Copyright © - Unpublished Work - See title page for details.

SERVICE BULLETIN REPAIRS - AUXILIARY WING SKIN

The following service bulletins contain auxiliary wing skin repairs which are available for use where specific damage has been encountered. Usually, the service bulletin also covers preventive modification data which operators are encouraged to use to eliminate the need for repair.

DAMAGED AREA	CUM LINE NUMBER EFFECTIVITY [A]	SB NUMBER
Wings - Outboard Lower Fixed Trailing Edge Beam, Ribs, Cove, and Aileron Balance Bay Access Panels Between (WBL) 417 and 522	1 thru 1256	737-57-1136

[A] For airplanes on which preventive modification has not been accomplished

REPAIR INSTRUCTIONS

1. If necessary to get access to the damage area, remove the section of the TAI duct as given in AMM 30-11.
2. Carefully make the cutout in the leading edge skin and in the nose beam, if necessary. See Detail I.
3. Return all indented or projecting skin to contour.
4. Make the repair parts given in Table I and shown in Detail I. Make the surface contour of the repair parts 1 and 3 the same as the surface contour of the leading edge skin.
5. Assemble the repair parts. See Detail I.
6. Drill the fastener holes.
7. Disassemble the repair parts.
8. Remove all nicks, scratches, burrs and sharp edges from the initial and repair parts.
9. Apply a protective chemical conversion coating to the repair parts and the cut edges of the initial parts. Refer to SRM 51-10-2.
10. Apply one coat of BMS 10-79, Type II or Type III primer to repair parts and the cut edges of the initial parts. Refer to SOPM 20-44-04.
11. Install the repair parts 1 and 3 with BMS 5-95 sealant between the mating surfaces. Refer to SRM 51-20-4.
12. Install the fasteners to the leading edge skin.
13. Apply a fillet seal with BMS 5-95 sealant along the edges of the repair part 1 . Refer to SRM 51-20-4.
14. Install the part 2 plate or access door cover with BMS 5-63 high temperature sealant between the mating surfaces.
15. Install the non-aluminum blind fasteners, if used, wet to the nose beam.
16. Apply BMS 5-95 sealant to the gap between the part 3 filler and the skin. Refer to SRM 51-70.
17. Apply the finish to the repair area. Refer to AMM 51-21.

NOTES

- THIS REPAIR WILL NOT HAVE AN EFFECT ON A STRUCTURALLY SIGNIFICANT ITEM (SSI) GIVEN IN SRM 51-00-4, FIG. 3. THUS, NO CHANGE TO THE SUPPLEMENTAL STRUCTURAL INSPECTION DOCUMENT (SSID) INSPECTION PROGRAM IS NECESSARY.
- WHEN YOU USE THIS REPAIR, REFER TO:
  - AMM 51-21 FOR INTERIOR AND EXTERIOR FINISHES
  - SOPM 20-44-04 FOR APPLICATION OF CORROSION RESISTANT PRIMER
  - SRM 51-10-1 FOR INVESTIGATION AND CLEANUP OF DAMAGE
  - SRM 51-10-2 FOR PROTECTIVE TREATMENT OF METALS
  - SRM 51-20-4 FOR SEALING OF REPAIRS
  - SRM 51-30 FOR FASTENER CODE, REMOVAL, INSTALLATION, HOLE SIZES, EDGE MARGINS AND SUBSTITUTION
  - SRM 51-70 FOR AERODYNAMIC SMOOTHNESS.

[A] TO BE USED WHEN ACCESS IS NOT AVAILABLE THROUGH OTHER EXISTING ACCESS PANELS.

[B] MAKE FASTENER SPACING 0.75 INCH TO 1.25 INCHES.

[C] SAME MATERIAL AND HEAT TREAT, BUT ONE GAGE THICKER THAN TOTAL THICKNESS FOR THE INITIAL LAMINATED SKIN. REFER TO SRM 51-20-1, FIG. 2, FOR LIST OF AVAILABLE SHEET METAL GAGES.

[D] SAME MATERIAL, HEAT TREAT AND GAGE AS TOTAL THICKNESS FOR INITIAL LAMINATED SKIN.

FASTENER SYMBOLS

REPAIR FASTENER LOCATION. INSTALL A BACR15CE5D FASTENER.

REPAIR FASTENER LOCATION. INSTALL A BACR15FR6E FASTENER. NAS1738E6 IS AN ALTERNATIVE FASTENER.

REPAIR MATERIAL			
PART		QTY	MATERIAL
1	PLATE	1	[C]
2	PLATE	1	0.071 INCH THICK CLAD 2024-T4 [A]
3	FILLER	1	[D]

TABLE I

Wing Leading Edge Skin - Flush Repair
Figure 1 (Sheet 1)

BOEING PROPRIETARY - Copyright © - Unpublished Work - See title page for details.

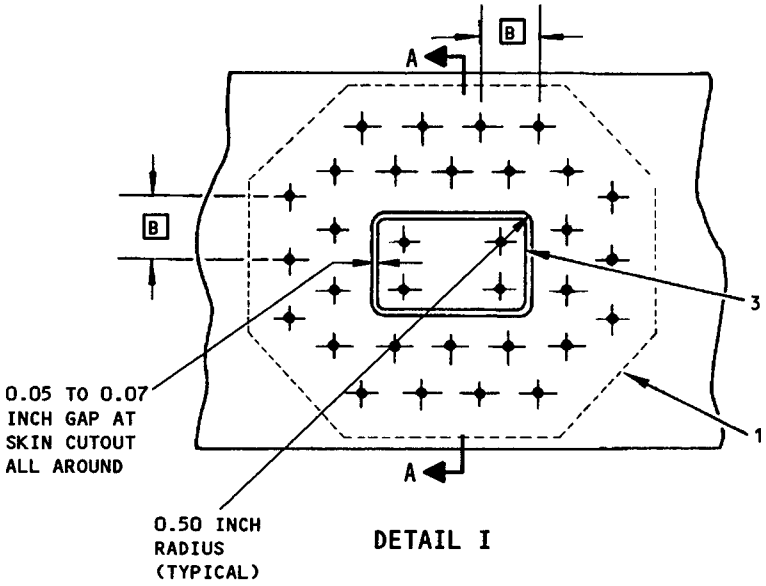

DETAIL I

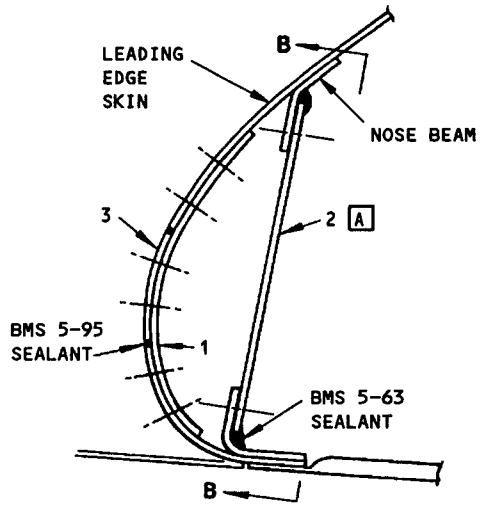

SECTION A-A

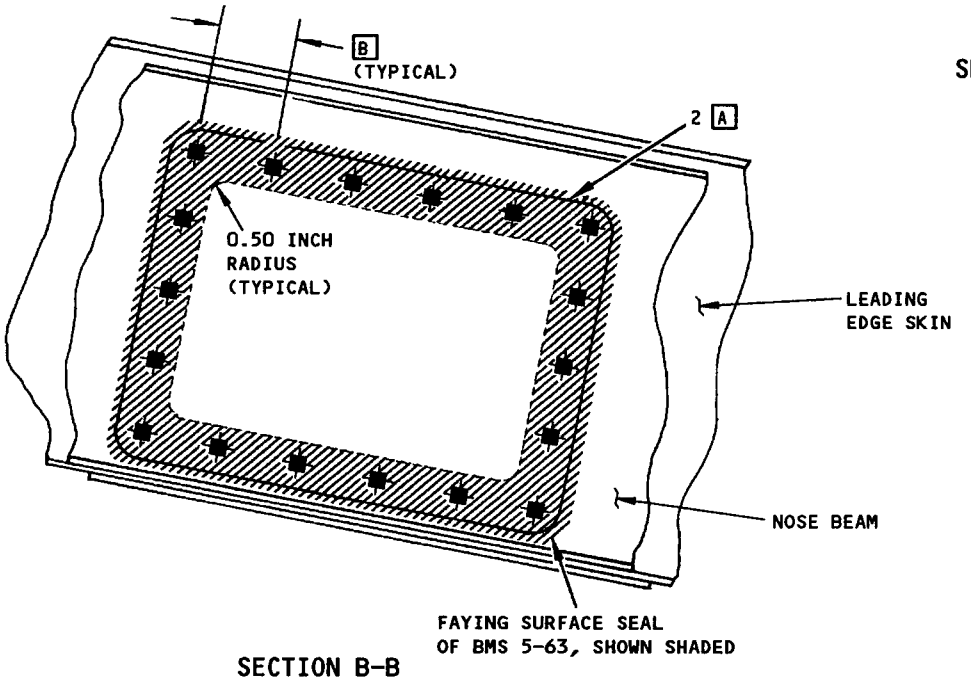

SECTION B-B

Wing Leading Edge Skin - Flush Repair
Figure 1 (Sheet 2)

BOEING PROPRIETARY - Copyright © - Unpublished Work - See title page for details.

REPAIR INSTRUCTIONS

1. Remove the fasteners from the repair area as necessary.

   CAUTION: DO NOT CUT THE STRINGER OR RIB WHEN YOU MAKE THE CUT.

2. Carefully make the cutout as necessary. See Detail I and II as applicable.
3. Make the repair parts given in Table I and shown in Detail I and II as applicable. Make the surface contour of the repair parts the same as the surface contour of the surface contour of the leading edge.
4. Assemble the repair parts. See Detail I and II as applicable.
5. Drill the fastener holes.
6. Disassemble the repair parts.
7. Remove all nicks, scratches, burrs and sharp edges from the initial and repair parts.
8. Apply a protective chemical conversion coating to the repair parts and the cut edges of the initial parts. Refer to SRM 51-10-2.
9. Install the repair parts with BMS 5-95 sealant between the mating surfaces. Refer to SRM 51-20-4.
10. Install the fasteners.
11. Apply a fillet seal with BMS 5-95 sealant along the edges of the repair part. Refer to SRM 51-20-4.
12. Apply BMS 5-95 sealant to the gap between the initial skin and part 1 filler as given in SRM 51-70.
13. Apply the finish to the repair area. Refer to AMM 51-21.

NOTES

- THESE REPAIRS WILL NOT HAVE AN EFFECT ON STRUCTURALLY SIGNIFICANT ITEMS (SSI) GIVEN IN SRM 51-00-4, FIG. 3. THUS, NO CHANGE TO THE SUPPLEMENTAL STRUCTURAL DOCUMENT (SSID) INSPECTION PROGRAM IS NECESSARY.
- D = FASTENER DIAMETER
- WHEN YOU USE THIS REPAIR, REFER TO:
  - AMM 51-20 FOR INTERIOR AND EXTERIOR FINISHES
  - SOPM 20-44-04 FOR APPLICATION OF CORROSION RESISTANT PRIMER
  - SRM 51-10-1 FOR INVESTIGATION AND CLEANUP OF DAMAGE
  - SRM 51-10-2 FOR PROTECTIVE TREATMENT OF METALS
  - SRM 51-20-4 FOR SEALING OF REPAIRS
  - SRM 51-30 FOR FASTENER CODE, REMOVAL, INSTALLATION, HOLE SIZES, EDGE MARGINS AND SUBSTITUTION
  - SRM 51-40-5 FOR BONDED REPAIR PROCEDURES
  - SRM 51-70 FOR AERODYNAMIC SMOOTHNESS.

[A] GAGE EQUIVALENT TO THE THICKNESS OF THE INITIAL SKIN.

[B] ONE GAGE GREATER THAN THE THICKNESS OF THE INITIAL SKIN.

[C] AS NEEDED.

FASTENER SYMBOLS

INITIAL FASTENER LOCATION. USE A 1/32 OVERSIZE FASTENER OF THE SAME TYPE AS THE INITIAL FASTENER (1/32 OVERSIZE SHEAR FLUSH HEAD HEX DRIVE BOLT IS OPTIONAL.

REPAIR FASTENER LOCATION. INSTALL BACR15CE5D FASTENER. BACB30FN5 HEX DRIVE BOLT WITH BCCC30M COLLAR IS OPTIONAL

REPAIR FASTENER LOCATION. INSTALL BACR15BB6D FASTENER. MS20470D6 RIVET OR BACB30FM6 HEX DRIVE BOLT WITH A BACC30M COLLAR IS OPTIONAL.

REPAIR MATERIAL			
REPAIR PART		QTY	MATERIAL
1	FILLER	1	CLAD 2024-T3 [A]
2	ANGLE	1	CLAD 7075-0 HEAT TREAT TO -T6 [B]
3	DOUBLER	1	CLAD 7075-0 HEAT TREAT TO -T6 [B]
4	DOUBLER	1	CLAD 7075-T6 [B]
5	FILLER	1	SAME GAGE AS RIB OR STRINGER FLANGE; CLAD 2024-T3
6	TAPERED FILLER	[C]	2024-T3

TABLE I

Wing Fixed Leading Edge Skin - Flush Repair
Figure 2 (Sheet 1)

BOEING PROPRIETARY - Copyright © - Unpublished Work - See title page for details.

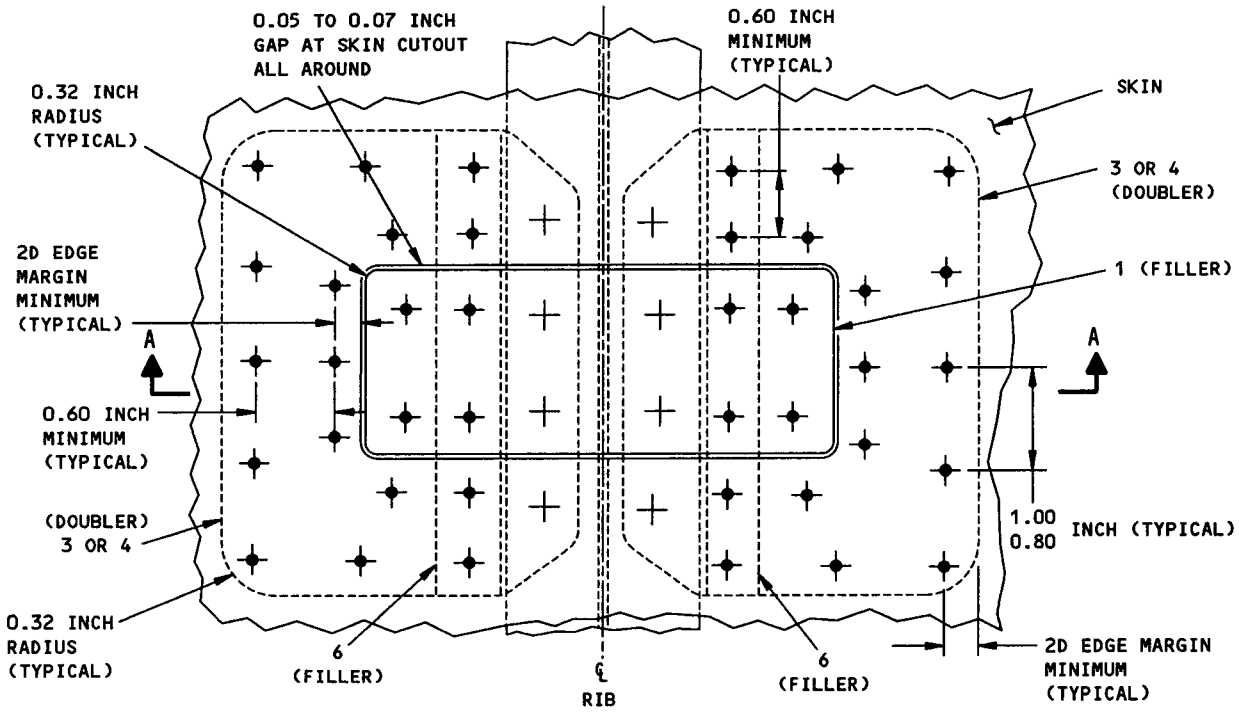

SKIN REPAIR AT HINGE RIBS BETWEEN L.E. STA 118.47 AND L.E. STA 226.47
(REPAIR AT MACHINED RIB IS SHOWN, REPAIR AT FORMED RIB IS ALMOST THE SAME)
DETAIL I

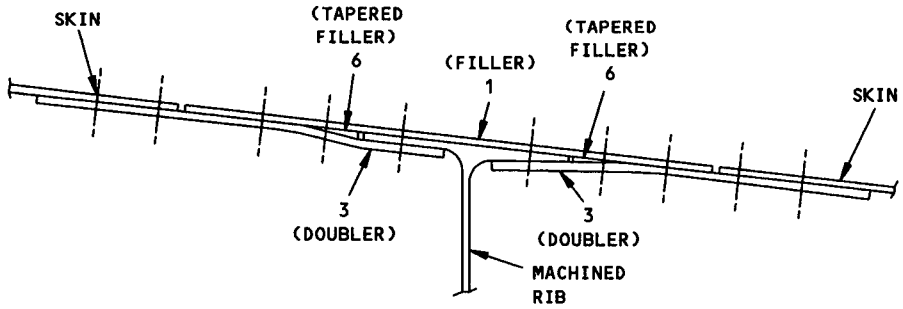

SECTION A-A FOR MACHINED RIB

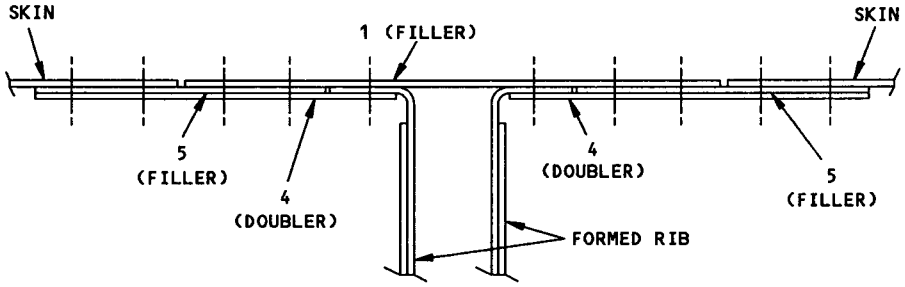

SECTION A-A FOR FORMED RIB

Wing Fixed Leading Edge Skin - Flush Repair
Figure 2 (Sheet 2)

BOEING PROPRIETARY - Copyright © - Unpublished Work - See title page for details.

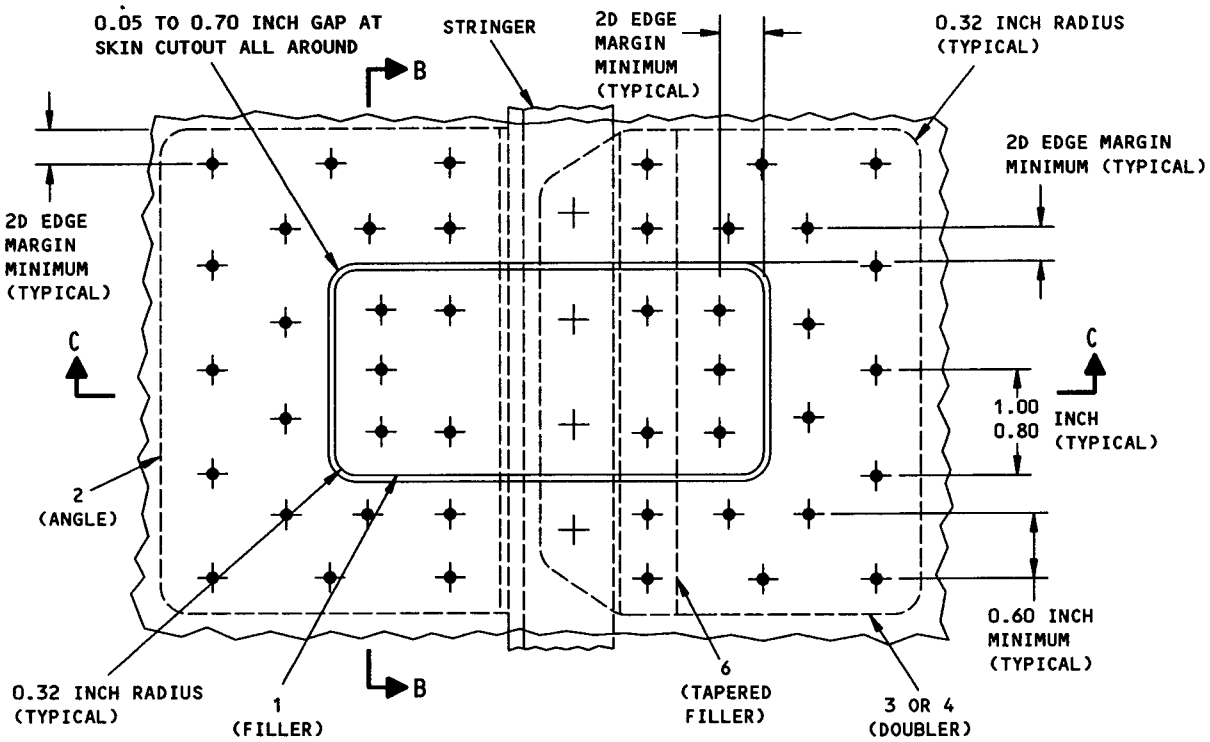

REPAIR AT A STRINGER
DETAIL II

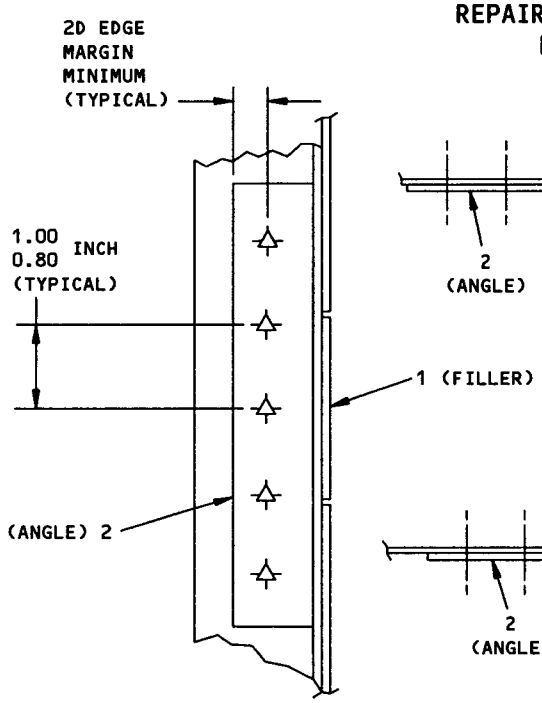

SECTION B-B

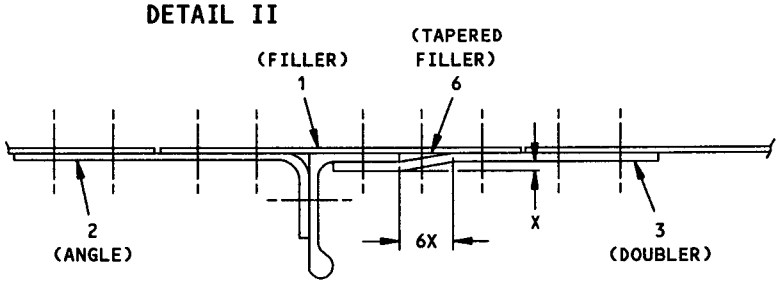

SECTION C-C

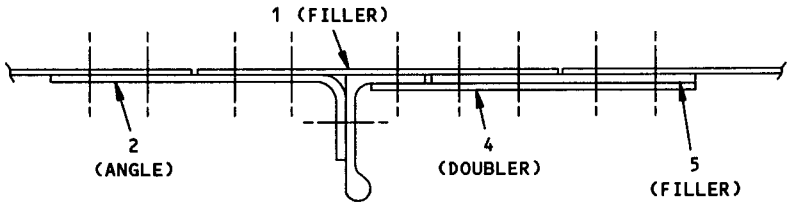

SECTION C-C
FOR AN ALTERNATE REPAIR

Wing Fixed Leading Edge Skin - Flush Repair
Figure 2 (Sheet 3)

BOEING PROPRIETARY - Copyright © - Unpublished Work - See title page for details.

REPAIR INSTRUCTIONS (REPAIR I)

1. Damage is assumed to be a crack in the skin immediately forward of the upper chord of the front spar inboard of the slats.

2. Trim out a rectangle from the aft edge of the fixed leading edge skin forward to include the crack. (Do not damage the spar chord.)

3. Fabricate parts 1, 2, and 3, shape to contour, drill and countersink as required.

4. Alodize all trimmed edges of original and repair parts per 51-10-2.

5. Prepare the inner surface of skin and mating surface of part for Bonding per 51-40-5, paragraph 2.

6. Install parts 1, 2, and 3. Bond per 51-40-5.

7. Add aerodynamic smoother BMS 5-79 per 51-70 to gap between part 1 and skin.

8. Replace original finish per 737 Maintenance Manual.

REPAIR INSTRUCTIONS (REPAIR II)

1. Damage is assumed to be a crack in the .016 + .016 skin immediately forward of the upper chord of the front spar in the slat area.

2. Trim out a rectangle from the aft edge of the fixed leading edge skin and doubler strap forward to include the cracked skin. (Do not damage the spar chord.)

3. Fabricate parts 3, 4, 5, 6 and 7. Shape to contour, drill and countersink as required.

4. If the leading edge rib interferes with length of repair trim rib and bracket to clear parts 3, 4, and 5 and fabricate parts 6, and 7. Drill as required.

5. Alodize all raw edges of repair and original parts per 51-10-2.

6. Prepare the inner surface of the skin and the mating surface of part 5 for Bonding per 51-40-5, paragraph 2.

7. Install parts 3, 4, 5, 6, and 7. Bond per 51-40-5.

8. Apply aerodynamic smoother BMS 5-79 per 51-70 to the gap between part 4 and the skin.

9. Replace original finish per the 737 Maintenance Manual.

Fixed Leading Edge Skin Repair at Front Spar
Figure 3 (Sheet 1 of 4)

NOTES

- THESE REPAIRS COULD HAVE AN EFFECT ON A STRUCTURALLY SIGNIFICANT ITEM (SSI) GIVEN IN SRM 51-00-4, FIG. 3. BUT, NO CHANGE TO THE SUPPLEMENTAL STRUCTURAL INSPECTION DOCUMENT (SSID) INSPECTION PROGRAM IS NECESSARY.
- THE MINIMUM NUMBER OF FASTENERS ON EACH SIDE OF THE DAMAGE ARE AS SHOWN.
- ALL DIMENSIONS ARE IN INCHES
- WHEN YOU DO THIS REPAIR, REFER TO:
  - SRM 51-10-1 FOR INVESTIGATION AND CLEANUP OF DAMAGE
  - SRM 51-10-2 FOR THE PROTECTIVE TREATMENT OF METAL
  - SRM 51-30 FOR THE FASTENER CODE, REMOVAL AND INSTALLATION, HOLE SIZES AND EDGE MARGINS
  - SRM 51-40-5 FOR METAL TO METAL BOND PROCEDURES.

[A] THESE PARTS ARE NECESSARY ONLY WHEN THE LENGTH OF THE REPAIR INTERFERES WITH THE RIB.

FASTENER SYMBOLS

┼ INITIAL FASTENER LOCATION

REPAIR FASTENER LOCATION. INSTALL A BACR15CE5D FASTENER

REPAIR FASTENER LOCATION. INSTALL A BACB30NE3 FASTENER WITH A BACN10JC NUT AND NAS1149D()J WASHER (AN960PD10L WASHER IS AN ALTERNATIVE)

REPAIR MATERIAL			
PART		QTY	MATERIAL
[1]	FILLER	1	0.063 INCH THICK CLAD 2024-T3
[2]	TAPERED FILLER	1	CLAD 2024-T3
[3]	DOUBLER	1	0.07 INCH THICK CLAD 7075-0 HT-T6
[4]	FILLER	1	0.10 INCH THICK CLAD 2024-T3
[5]	FILLER	1	0.05 INCH THICK CLAD 2024-0 HT-T4
[6]	ANGLE	1	0.07 INCH THICK [A] CLAD 2024-0 HT-T4
[7]	ANGLE	1	0.05 INCH THICK [A] CLAD 7075-0 HT-T6

TABLE I

Fixed Leading Edge Skin Repair at Front Spar
Figure 3 (Sheet 2)

BOEING PROPRIETARY - Copyright © - Unpublished Work - See title page for details.

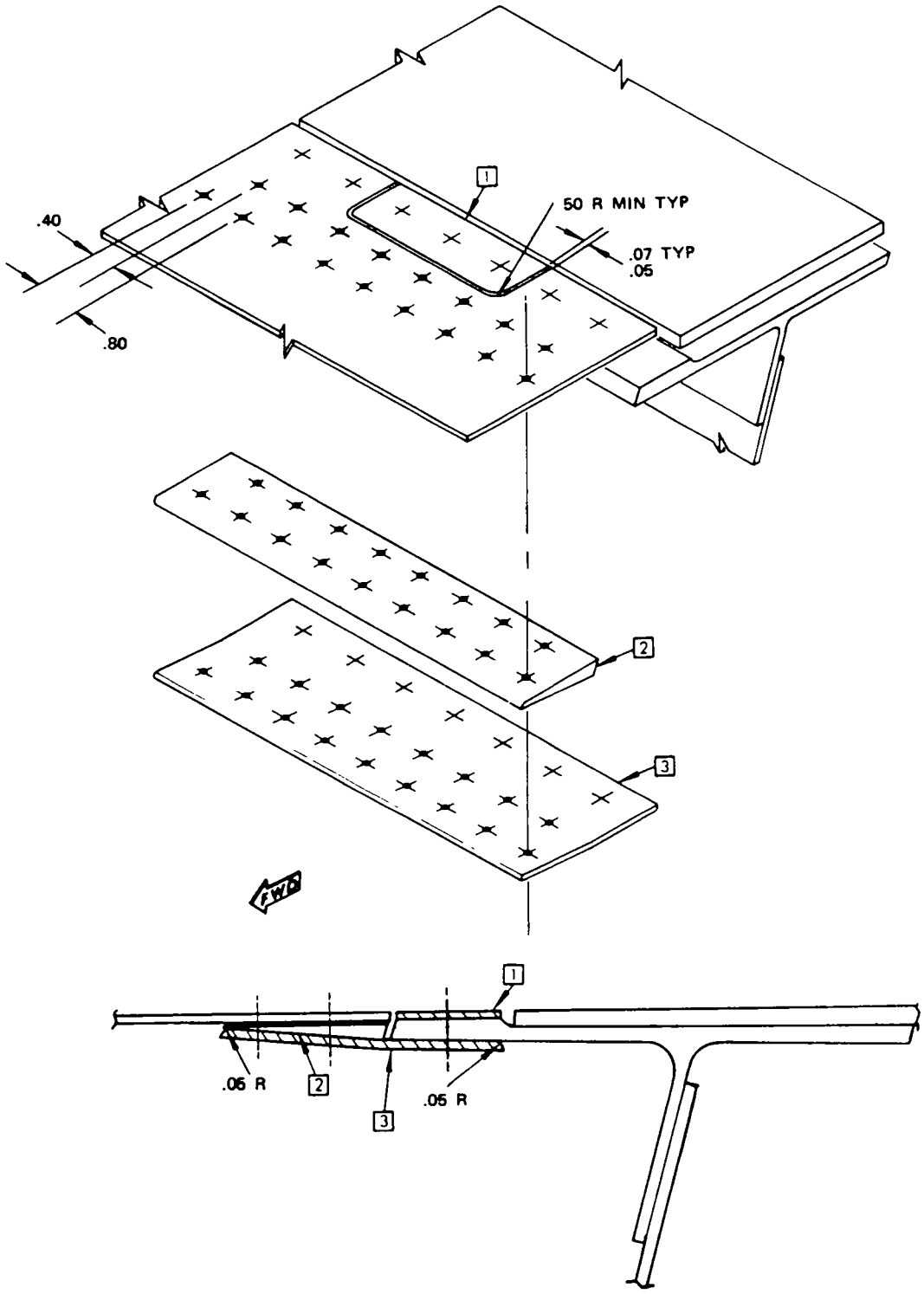

SECTION THROUGH REPAIR

REPAIR I (INBOARD OF SLATS)

Fixed Leading Edge Skin Repair at Front Spar
Figure 3 (Sheet 3 of 4)

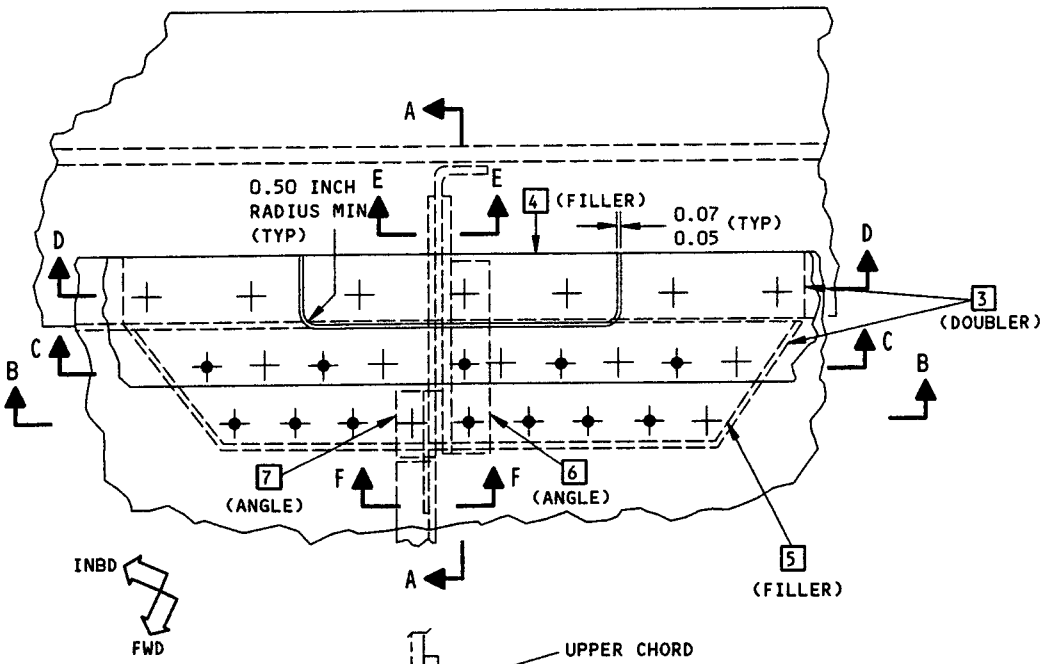

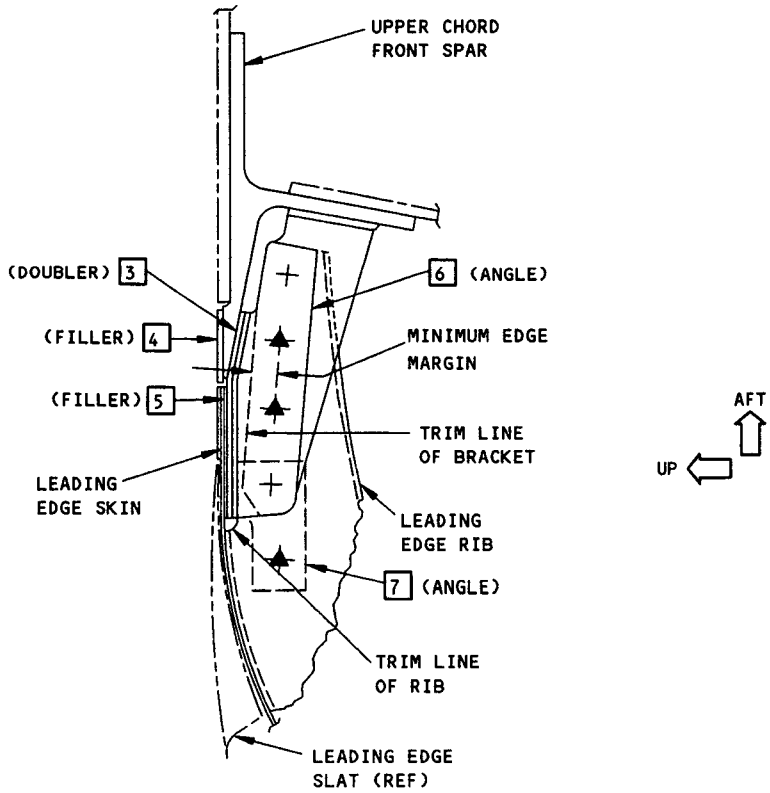

SECTION A-A

REPAIR II (IN SLAT AREA)

Fixed Leading Edge Skin Repair at Front Spar
Figure 3 (Sheet 4)

BOEING PROPRIETARY - Copyright © - Unpublished Work - See title page for details.

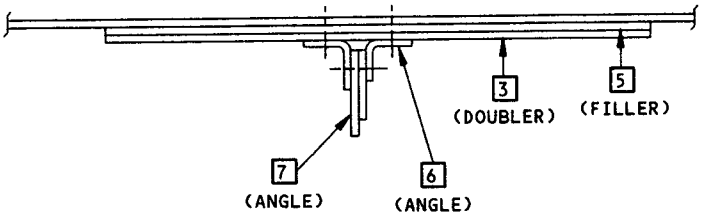

SECTION B-B

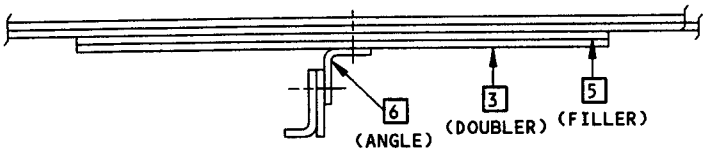

SECTION C-C

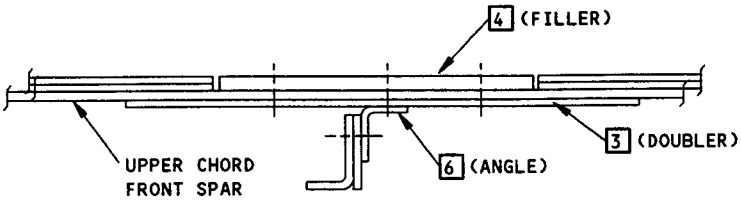

SECTION D-D

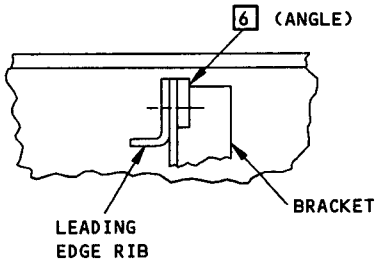

SECTION E-E

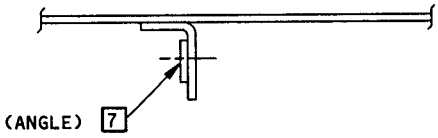

SECTION F-F

REPAIR II (IN SLAT AREA)

Fixed Leading Edge Skin Repair at Front Spar
Figure 3 (Sheet 5)

BOEING PROPRIETARY - Copyright © - Unpublished Work - See title page for details.

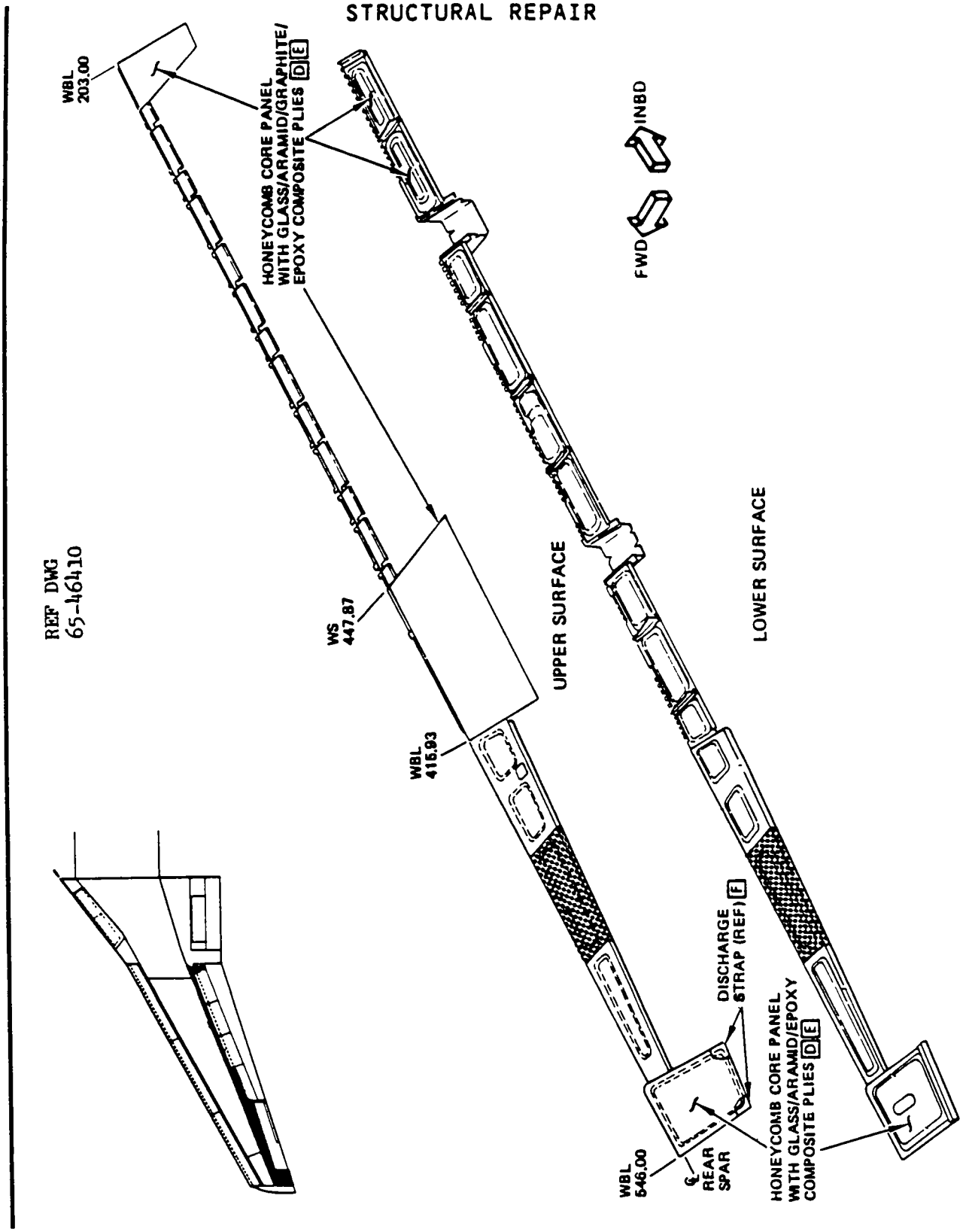

Repairs to Glass/Aramid/Graphite/Epoxy
Composite Wing Trailing Edge Skin Panels
Figure 4 (Sheet 1)

REF DWG
65-50820

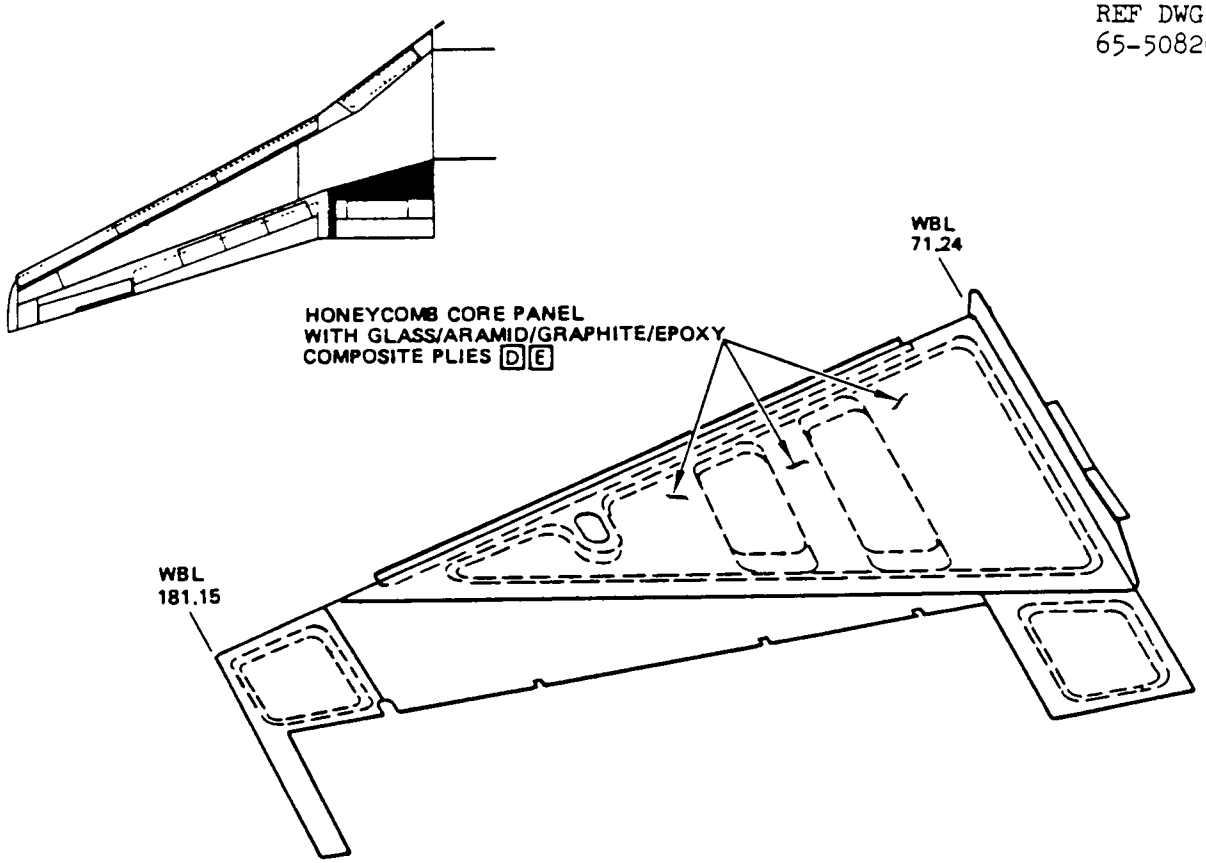

UPPER SURFACE

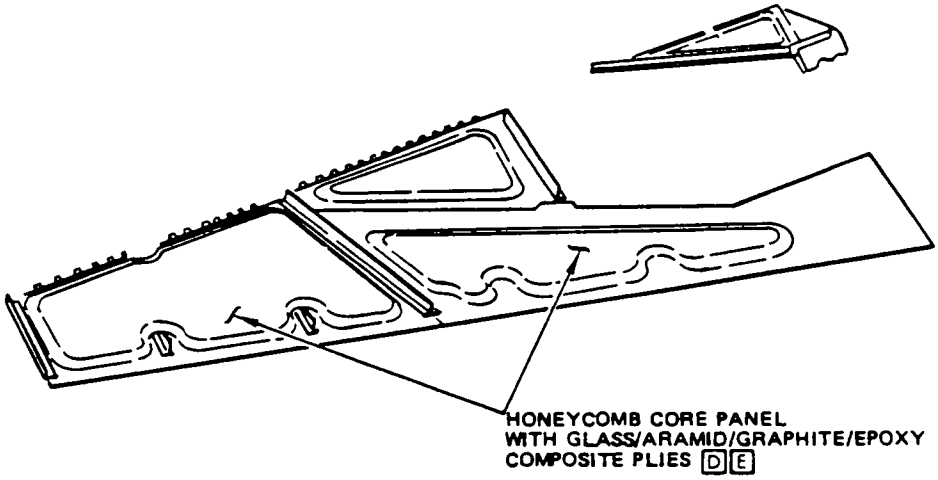

LOWER SURFACE

Repairs to Glass/Aramid/Graphite/Epoxy
Composite Wing Trailing Edge Skin Panels
Figure 4 (Sheet 2)

DAMAGE	INTERIM REPAIRS [B]	PERMANENT REPAIRS		
	WET LAYUP ROOM TEMP (51-40-12)	WET LAYUP 150°F CURE (51-40-12)	WET LAYUP 200°F CURE (51-40-15)	250°F CURE (51-40-13)
HOLES	2.0 MAX DIA NOT TO EXCEED 30% OF SMALLEST DIMENSION ACROSS HONEYCOMB PANEL AT THE DAMAGE LOCATION. REPAIR PER 51-40-12, REPAIR 14. [A]	6.0 MAX DIA NOT TO EXCEED 50% OF SMALLEST DIMENSION ACROSS HONEYCOMB PANEL AT THE DAMAGE LOCATION. USE TWO EXTRA PLIES PER FACESHEET REPAIRED [C]	6.0 MAX DIA NOT TO EXCEED 50% OF SMALLEST DIMENSION ACROSS HONEYCOMB PANEL AT THE DAMAGE LOCATION. USE TWO EXTRA PLIES PER FACESHEET REPAIRED [C]	NO SIZE LIMIT
CRACKS	UP TO 6.0 INCHES LONG, REPAIR PER 51-40-12, REPAIR 14. [A]	USE SAME LIMITS AND REQUIREMENTS AS FOR HOLES.		
DELAMI-NATION	USE SAME LIMITS AS FOR HOLES AND REPAIR PER 51-40-12, REPAIR 14. [A]	USE SAME LIMITS AND REQUIREMENTS AS FOR HOLES.		
NICKS AND GOUGES	IF FIBER DAMAGE OR DELAMINATION EXISTS, USE SAME LIMITS AS FOR HOLES AND REPAIR PER 51-40-12, REPAIR 14. [A]	IF THERE IS NO FIBER DAMAGE OR DELAMINATION, FILL NICKS OR GOUGES PER 51-40-12. IF FIBER DAMAGE OR DELAMINATION EXISTS, USE SAME LIMITS AND REQUIREMENTS AS FOR HOLES.		
DENTS	USE SAME LIMITS AS FOR HOLES AND REPAIR PER 51-40-12, REPAIR 14. [A]	USE SAME LIMITS AND REQUIREMENTS AS FOR HOLES.		

REPAIR DATA FOR 250°F CURE HONEYCOMB PANELS

TABLE I

NOTES

- REFER TO 51-10 FOR INVESTIGATION AND CLEANUP OF DAMAGE
- REFINISH REWORKED AREAS PER 51-20 OF THE MAINTENANCE MANUAL
- REFER TO 51-70 FOR AERODYNAMIC SMOOTHNESS REQUIREMENTS. WHERE THE DAMAGE EXCEEDS THE LIMITS SHOWN IN 51-70, CONSIDERATION SHOULD BE GIVEN TO THE LOSS OF PERFORMANCE INVOLVED
- WHERE NO REPAIR IS SPECIFIED, USE THE REPAIR INDEX IN THE APPROPRIATE REPAIR SECTION OF 51-40 TO DETERMINE THE REPAIR TO BE USED

[A] LIMITED TO REPAIR OF DAMAGE TO ONE FACE-SHEET SKIN AND HONEYCOMB CORE. ONE REPAIR PER SQUARE FOOT OF AREA AND MINIMUM OF 6.0 INCHES (EDGE TO EDGE) FROM ANY OTHER DAMAGE (ON EITHER SIDE OF PANEL), FASTENER HOLE, OR EDGE OF PANEL

[B] INSPECT INTERIM REPAIR USING NDI METHODS PER 51-40-12 EVERY AIRPLANE "2A" CHECK. PERMANENT REPAIR IS REQUIRED IF ANY DETERIORATION IS EVIDENT. THESE REPAIRS HAVE FAA APPROVAL CONTINGENT ON ACCOMPLISHMENT OF THE INSPECTIONS AT THE REQUIRED INTERVALS

[C] ONE REPAIR PER SQUARE FOOT OF AREA AND A MINIMUM OF 3.0 INCHES (EDGE TO EDGE) FROM ANY OTHER DAMAGE (ON EITHER SIDE OF PANEL), FASTENER HOLE, OR EDGE OF PANEL

Repairs to Glass/Aramid/Graphite/Epoxy Composite Wing Trailing Edge Skin Panels
Figure 4 (Sheet 3)

143135

DAMAGE	INTERIM REPAIRS [B]	PERMANENT REPAIRS	
	WET LAYUP ROOM TEMP (51-40-12)	WET LAYUP 200°F CURE (51-40-15)	250°F CURE (51-40-13)
HOLES	REPAIR DAMAGE TO FASTENER HOLES PER 51-40-12, REPAIR 9 FOR ALL OTHER DAMAGE UP TO 15% OF CROSS-SECTIONAL AREA THRU THE EDGEBAND OR 10% OF THE EDGEBAND LENGTH PER AFFECTED SIDE, REPAIR PER 51-40-12, REPAIR 7	REPAIR DAMAGE TO FASTENER HOLES PER 51-40-15, REPAIR 9 FOR ALL OTHER DAMAGE, REPAIR PER 51-40-15, REPAIR 7	REPAIR DAMAGE TO FASTENER HOLES PER 51-40-13, REPAIR 9 FOR ALL OTHER DAMAGE, REPAIR PER 51-40-13, REPAIR 7
DELAMI-NATION	IF DELAMINATION FROM PANEL EDGE IS NO LESS THAN 2D FROM ANY FASTENER HOLE, REPAIR PER 51-40-12, REPAIR 6 FOR ANY OTHER DELAMINATION, USE SAME LIMITS AND REPAIRS AS FOR HOLES	USE SAME REPAIRS AS FOR HOLES	
CRACKS	USE SAME LIMITS AND REPAIRS AS FOR HOLES	USE SAME REPAIRS AS FOR HOLES	
NICKS AND GOUGES	IF FIBER DAMAGE EXISTS, USE SAME LIMITS AND REPAIRS AS FOR HOLES IF DELAMINATION EXISTS, USE SAME LIMITS AND REPAIRS AS FOR DELAMINATION	IF THERE IS NO FIBER DAMAGE OR DELAMINATION, FILL NICKS OR GOUGES PER 51-40-12 IF FIBER DAMAGE OR DELAMINATION EXISTS, USE SAME REPAIRS AS FOR HOLES	
DENTS	IF FIBER DAMAGE EXISTS, USE SAME LIMITS AND REPAIRS AS FOR HOLES IF DELAMINATION EXISTS, USE SAME LIMITS AND REPAIRS AS FOR DELAMINATION	IF THERE IS NO FIBER DAMAGE OR DELAMINATION, REPAIR PER 51-40-12, REPAIR 12 IF FIBER DAMAGE OR DELAMINATION EXISTS, USE SAME REPAIRS AS FOR HOLES	

REPAIR DATA FOR EDGEBANDS OF 250°F CURE HONEYCOMB PANELS
TABLE II

NOTES

- D = FASTENER DIAMETER

[D] REFER TO 57-30-2 FOR EFFECTIVITY OF GLASS/ARAMID/GRAPHITE/EPOXY COMPOSITE WING TE PANELS

[E] REFER TO TABLES I AND II FOR REPAIR DATA

[F] MINIMUM DISTANCE BETWEEN REPAIR AND METAL DISCHARGE STRAP TO BE 1.0 INCH (EDGE TO EDGE)

Repairs to Glass/Aramid/Graphite/Epoxy Composite Wing
Trailing Edge Skin Panels
Figure 4 (Sheet 4)

143138

REPAIR INSTRUCTIONS

1. Get access to the damaged area.
2. Remove the fixed leading edge lower access panel.
3. Remove the fasteners in the repair area. Refer to SRM 51-30.
4. Carefully drive nylon or hardwood wedges between the skin and filler or other structure as necessary in the repair area. Use sufficient wedges to gradually separate the parts and prevent buckling.
5. Use a thin steel sheet between the skin and filler, or other adjacent structure as necessary to prevent damage to the adjacent structure.
6. Cut the leading edge filler and skin as shown on Detail I.
7. Make the repair parts. See Table I. Form the repair plates to match the leading edge contour.
8. Assemble the repair parts and drill the fastener holes.
9. Disassemble the repair parts.
10. Remove the nicks, scratches, gouges, burrs, and sharp edges from the repair parts and the initial parts.
11. Apply a chemical conversion coating to the repair parts and to the bare surfaces of the initial parts. Refer to SRM 51-10-2.
12. Apply one layer of BMS 10-11, Type II primer to the repair parts and to the bare surfaces of the initial parts. Refer to SOPM 20-41-02.
13. Install the repair parts. Apply BMS 5-95 sealant to the mating surfaces. Apply fillet seals and fill all gaps with BMS 5-95 sealant. Refer to SRM 51-20-4.
14. Install the fasteners.
15. Apply two layers of BMS 10-86, Type 1 or 2 teflon filled coating to the repair area. Refer to SOPM 20-42-01.

NOTES

- THIS REPAIR IS A CATEGORY A REPAIR. REFER TO SRM 51-00-6.
- D = FASTENER DIAMETER.
- ALL DIMENSIONS ARE IN INCHES UNLESS OTHERWISE STATED.
- WHEN YOU USE THIS REPAIR REFER TO:
  - SOPM 20-41-02 FOR APPLICATION OF CHEMICAL AND SOLVENT RESISTANT FINISHES
  - SRM 51-00-6 FOR STRUCTURAL REPAIR DEFINITIONS
  - SRM 51-10-2 FOR PROTECTIVE TREATMENT OF METALLIC AND GRAPHITE MATERIALS
  - SRM 51-20-1 FOR SHEET METAL MATERIALS
  - SRM 51-20-4 FOR REPAIR SEALING
  - SRM 51-30 FOR FASTENER CODE REMOVAL AND INSTALLATION, HOLE SIZES AND EDGE MARGINS.

[A] YOU CAN DO THE SPLICE CUT PROCEDURE IN TWO PLACES IF THE DAMAGE IS NOT NEAR AN INITIAL SKIN SPLICE.

[B] YOU CAN USE THE INITIAL REMOVED PIECE OF FILLER AGAIN OR REPLACE IT.

[C] REMOVE AND INSTALL NUTPLATES. REPLACE WITH A BACN10JS3A2CD IF NECESSARY.

Fixed Leading Edge Skin Splice Repair
Figure 5 (Sheet 1)

FASTENER SYMBOLS

- REFERENCE FASTENER LOCATION. IF THIS FASTENER IS REMOVED, INSTALL THE SAME TYPE AND DIAMETER FASTENER AS THE INITIAL FASTENER UP TO 1/32 INCH DIAMETER OVERSIZE.
- INITIAL FASTENER LOCATION. INSTALL THE SAME TYPE AND DIAMETER AS THE INITIAL FASTENER UP TO 1/32 INCH DIAMETER OVERSIZE IF NECESSARY.
- REPAIR FASTENER LOCATION. INSTALL A BACR15FP5E BLIND RIVET.
- REPAIR FASTENER LOCATION. INSTALL A BACR15CE5D RIVET.
- REPAIR FASTENER LOCATION. INSTALL THE SAME TYPE AND DIAMETER FASTENER AS THE INITIAL FASTENER FOR THE FILLER UP TO 1/32 INCH DIAMETER OVERSIZE IF NECESSARY.

REPAIR MATERIAL			
PART		QTY	MATERIAL
1	SKIN	1	USE THE SAME THICKNESS AS THE INITIAL SKIN, 2024-T3 BARE OR CLAD.
2	SPLICE PLATE	2 [A]	0.050 INCH, 2024-T3 BARE OR CLAD.
3	SPLICE PLATE	2 [A]	0.050 INCH, 2024-T3 BARE OR CLAD.
4	FILLER	1 [B]	USE THE SAME THICKNESS AS THE INITIAL FILLER, 2024-T3 BARE OR CLAD.

TABLE I

Fixed Leading Edge Skin Splice Repair
Figure 5 (Sheet 2)

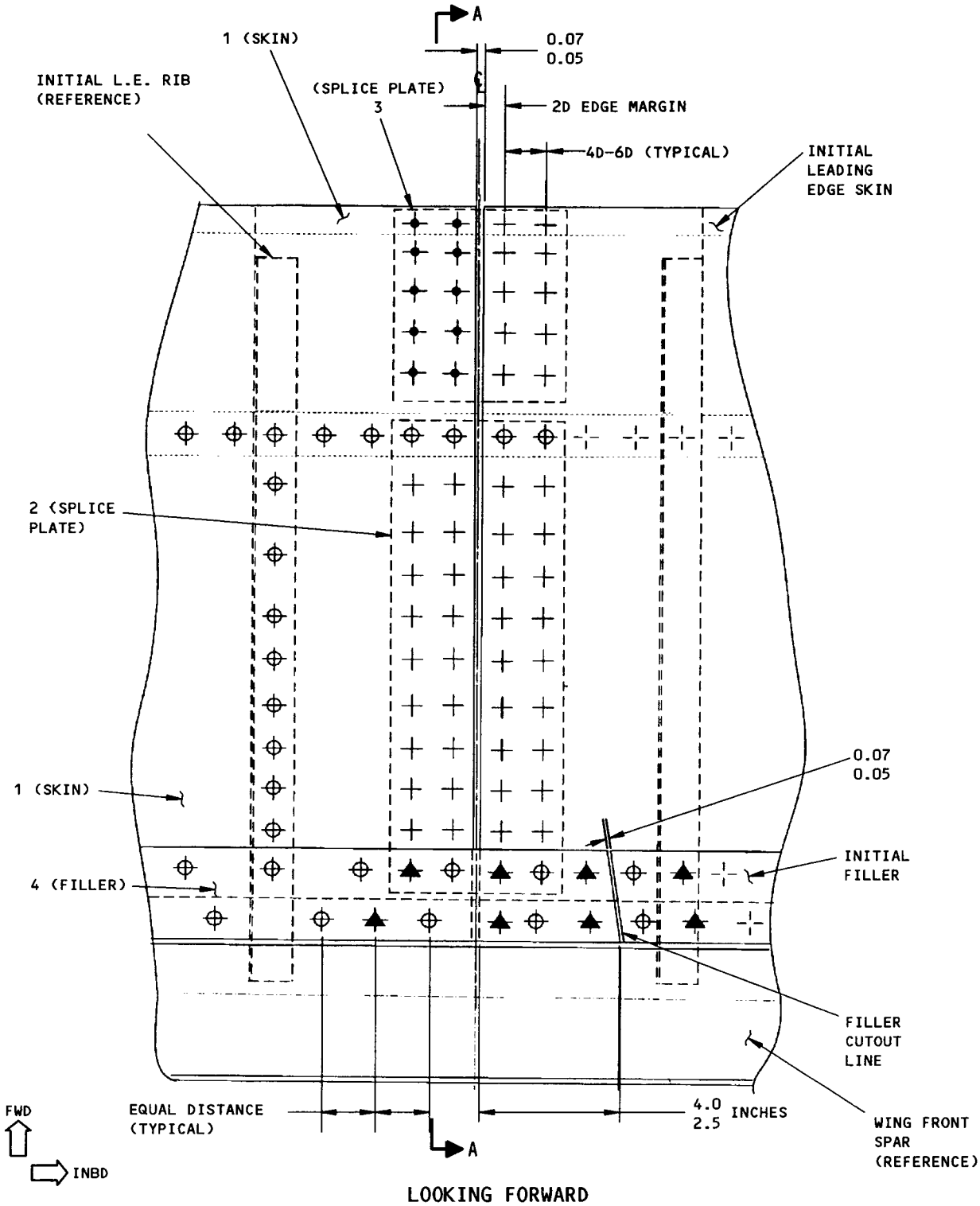

LOOKING FORWARD
ONE END OF SKIN IS SHOWN, OTHER END IS SYMMETRICAL
DETAIL I

Fixed Leading Edge Skin Splice Repair
Figure 5 (Sheet 3)

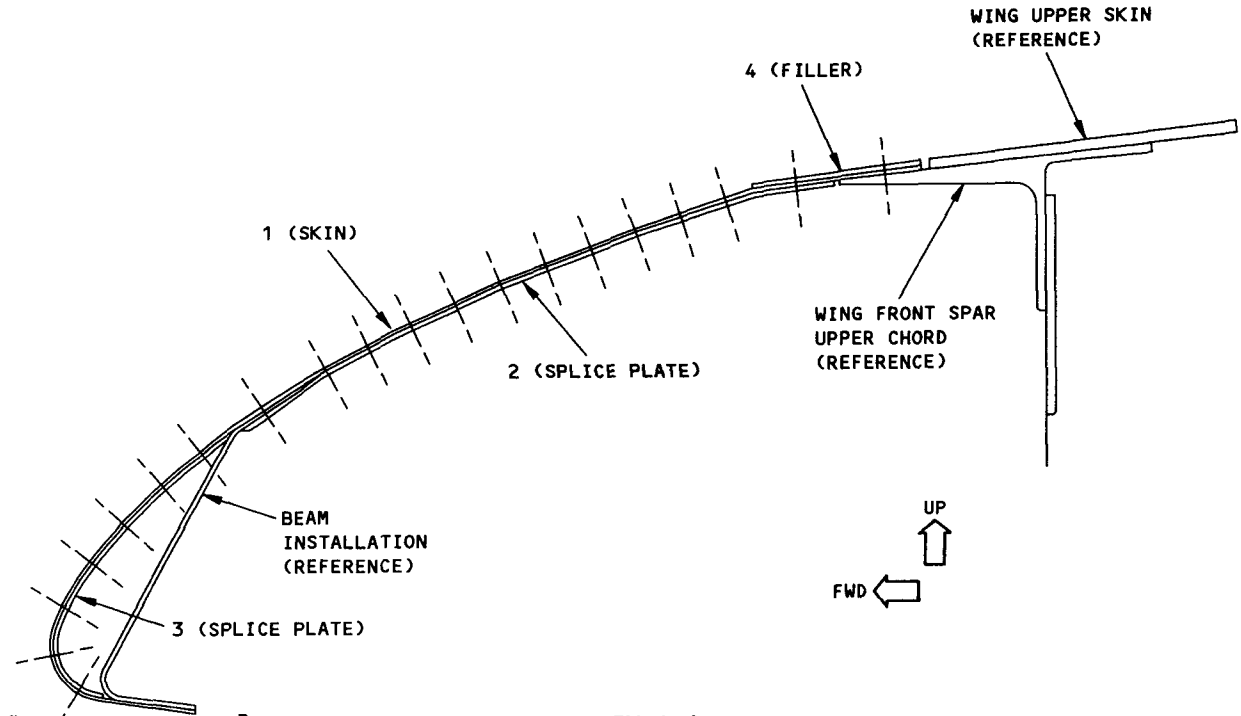

VIEW A-A
SIDE VIEW
(LOWER ACCESS PANEL IS NOT SHOWN FOR CLARITY)

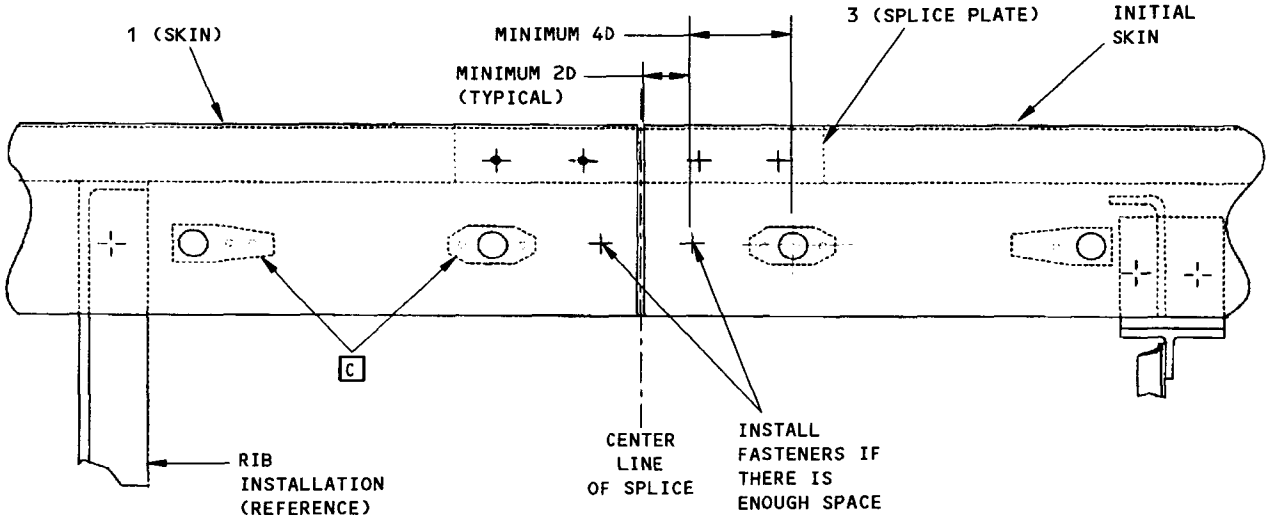

VIEW B-B

Fixed Leading Edge Skin Splice Repair
Figure 5 (Sheet 4)

LEADING EDGE SKIN REPAIR SEALING

1. General

A. Repair and make an intermediate seal to damaged leading edge skin in which damage exceeds the allowable as defined by 57-30-1. Seal a flush skin repair by filleting after installation of all repair components and fasteners with BMS 5-63, High Temperature Sealant per requirements of 51-31-0 of the 737 Maintenance Manual. Apply filleted seals to doubler edges and seal the fasteners on the high temperature side of the skin. Seal an external patch type repair by applying a faying surface seal between the patch and the original skin as follows:

(1) Remove all grease, dirt, or other contamination from skin and patch with solvent, Series 92 (Ref AMM 20-30-92/201 or SOPM 20-30-92) prior to sealant application. Use only clean, expendable gauze sponges or equivalent absorbent materials and clean solvent.

(2) Wipe off all solvent while wet with a clean cloth.

(3) Repeat steps (1) and (2) above until no visible soil remains on the wiping cloth.

(4) Remove all solvent from the faying surfaces by a blast of oil-free and water-free air.

(5) Make a final cleaning with a cloth just damp with solvent and wipe dry.

(6) Apply the sealant, BMS 5-63, High Temperature Sealant to both surfaces by a flow gun or spatula. Apply the sealant to cover the faying surface to depth of 0.03 approximately. Do not thin the sealant with solvent.

(7) Spray a light coat of zinc chromate primer to sealant 1 hour after application as a protective coating, if required.

(8) Coat all fastener shanks and heads with sealant and install.

NOTE: Complete all repair installations within the pot life of the sealant.

(9) Wipe away any excess sealant which may extrude beyond the beveled edges of the patch doubler.

(10) Apply circulating warm air, 140°F maximum, to accelerate curing time of the sealant.

B. Refer to 51-20-3 for sources of nonmetallic repair materials.

BOEING PROPRIETARY - Copyright © - Unpublished Work - See title page for details.

ATTACH FITTINGS

1. General

   A. Attach fittings are identified in sections 57-10, 57-20 and 57-50.

   B. Attach fittings are normally replacement items.

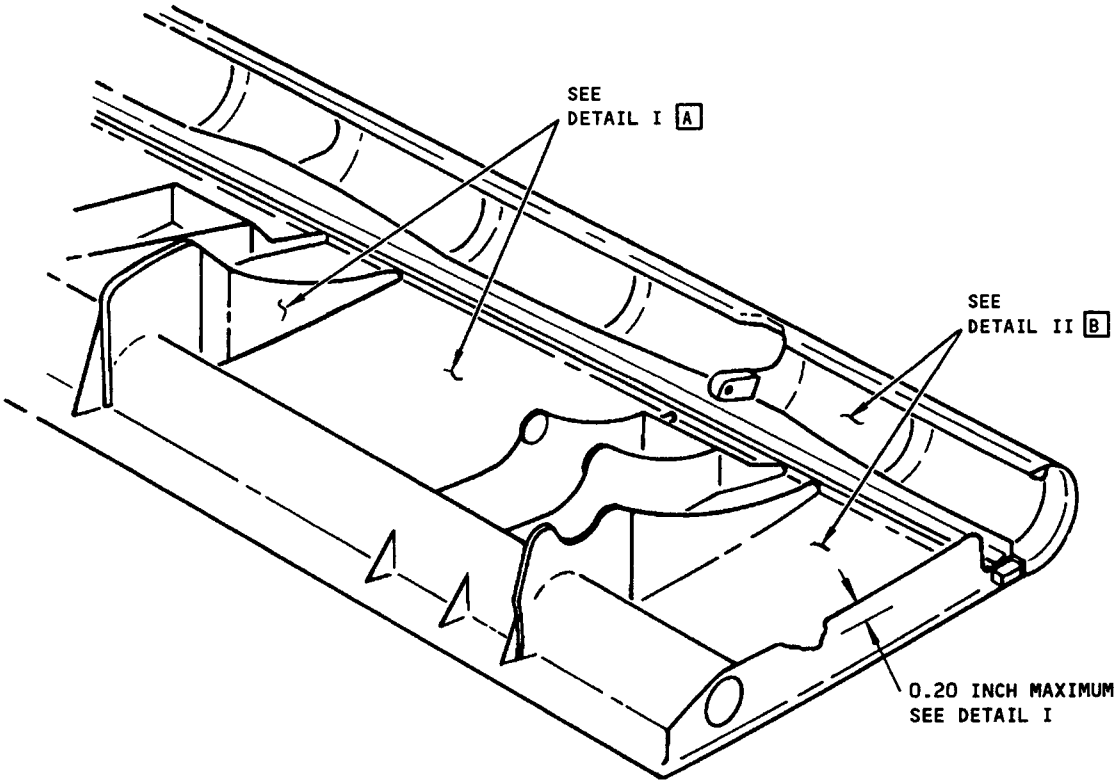

TYPICAL SECTION - WING LEADING EDGE FLAP

NOTES

- THE ALLOWABLE DAMAGE LIMITS GIVEN IN THIS FIGURE WILL NOT HAVE AN EFFECT ON A STRUCTURALLY SIGNIFICANT ITEM (SSI) GIVEN IN SRM 51-00-4, FIG. 3. THUS, NO CHANGE TO THE SUPPLEMENTAL STRUCTURAL INSPECTION DOCUMENT (SSID) INSPECTION PROGRAM IS NECESSARY.
- CRACKS OR HOLES ARE NOT PERMITTED.
- USE A DYE PENETRANT INSPECTION TO FIND CRACKS.

A MAXIMUM DEPTH OF SCRATCH OR GOUGE MUST NOT BE MORE THAN 20 PERCENT OF THE MATERIAL THICKNESS.

B MAXIMUM DEPTH OF DENT DAMAGE MUST NOT BE MORE THAN Y = 0.05 INCH. MAXIMUM A/Y RATIO MUST NOT BE LESS THAN 30. SEE DETAIL II.

Allowable Damage - Wing Leading Edge Flaps
Figure 1 (Sheet 1)

BOEING PROPRIETARY - Copyright © - Unpublished Work - See title page for details.

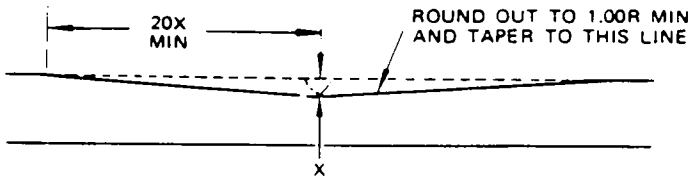

SECTION THROUGH GOUGE A
DETAIL I

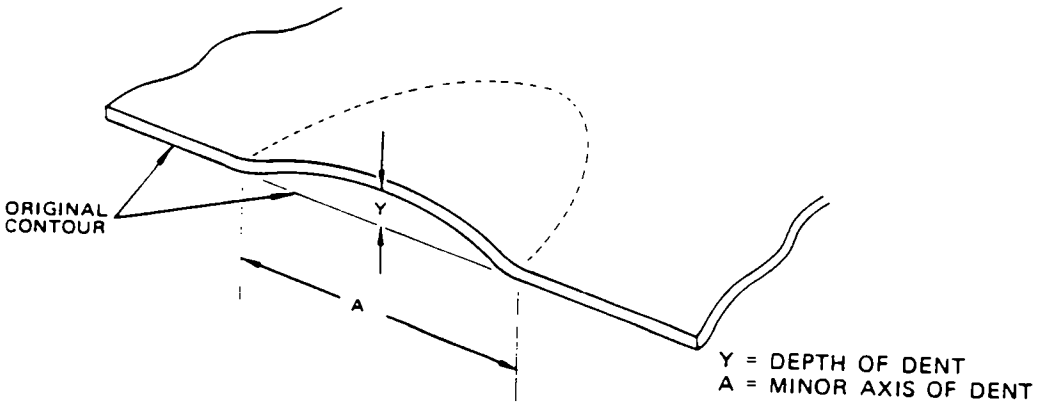

SECTION THROUGH DENT B
DETAIL II

Allowable Damage - Wing Leading Edge Flaps
Figure 1 (Sheet 2 of 2)

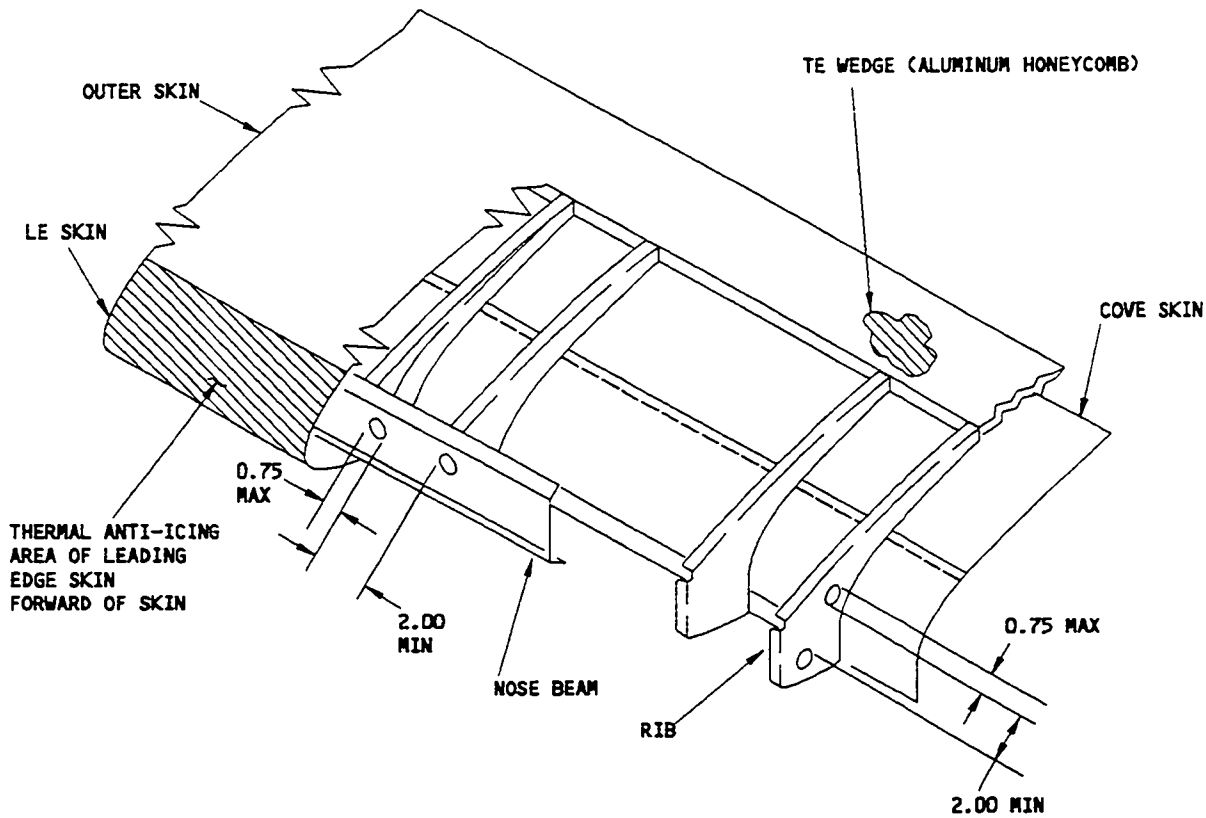

TYPICAL SECTION - WING LEADING EDGE SLAT
DETAIL I

Allowable Damage - Wing Leading Edge Slats
Figure 2 (Sheet 1)

DESCRIPTION	CRACKS	NICKS, GOUGES, SCRATCHES, AND CORROSION	DENTS	HOLES AND PUNCTURES	DELAMINATION
LE SKIN [C]	[I]	[A]	[B]	[R]	—
NOSE BEAM	[I]	[A]	[T]	[E]	—
TE WEDGE (ALUMINUM HONEYCOMB) [P] [F]	[M]	[O] [J]	[K]	[N] [H]	[F] [L]
RIB	[I]	[A]	[G]	[E]	—
OUTER SKIN [C]	[I]	[A]	[S]	[R]	—
COVE SKIN	[I]	[A]	[T]	[R]	—

TABLE I

NOTES

- THE ALLOWABLE DAMAGE LIMITS GIVEN IN THIS FIGURE WILL NOT HAVE AN EFFECT ON A STRUCTURALLY SIGNIFICANT ITEM (SSI) GIVEN IN SRM 51-00-4, FIG. 3. THUS, NO CHANGE TO THE SUPPLEMENTAL STRUCTURAL INSPECTION DOCUMENT (SSID) INSPECTION PROGRAM IS NECESSARY.
- THESE ALLOWABLE DAMAGE LIMITS HAVE FAA APPROVAL IF THE INSPECTIONS SHOWN IN THIS FIGURE ARE COMPLETED AT THE SPECIFIED TIMES.
- REFER TO AMM 51-21 FOR PROTECTIVE FINISH TREATMENT OF REPAIRED AREAS.
- REFER TO SRM 51-10-1 FOR DAMAGE CLASSIFICATION.
- REFER TO SRM 51-10-2 FOR PROTECTIVE TREATMENT OF METAL REPAIR PARTS. APPLY A CHEMICAL CONVERSION COATING TO BARE ALUMINUM SURFACES.
- REFER TO SRM 51-10-6 FOR CORROSION REMOVAL.
- REFER TO SRM 51-30-6 FOR FASTENER EDGE MARGINS.
- REFER TO SRM 51-40-6 FOR ALUMINUM HONEYCOMB STRUCTURE REPAIRS.
- REFER TO SRM 51-70 FOR AERODYNAMIC SMOOTHNESS.
- NICKS, GOUGES, AND SCRATCHES THAT DO NOT GO ALL THE WAY THROUGH CLAD SURFACES CAN BE BURNISHED. MAKE AN INSPECTION OF THE DEPTH OF PENETRATION AS SHOWN IN SRM 51-10-1.
- KEEP RECORDS OF THE LOCATION OF ALL ALLOWABLE DAMAGE THAT IS NOT REPAIRED. MAKE AN INSPECTION FREQUENTLY AND DO PERMANENT REPAIRS IMMEDIATELY IF THE DAMAGE BECOMES LARGER.

[A] REMOVE NICKS, GOUGES, SCRATCHES, AND CORROSION AS SHOWN IN DETAILS II, IV, V, AND VI.

[B] DENTS ARE PERMITTED AS SHOWN IN DETAIL III. THE MAXIMUM DEPTH OF A DENT MUST NOT BE MORE THAN 0.06 INCH. A SLAT MUST NOT HAVE MORE THAN 10 DENTS IN THIS AREA. THE DISTANCE BETWEEN ADJACENT DENTS MUST BE MORE THAN ONE-HALF OF THE MAXIMUM DIMENSION OF THE LARGEST DENT.

DENTS THAT AGREE WITH THE LIMITS GIVEN HERE CAN BE FILLED AS GIVEN IN SRM 51-40-1. IT IS OPTIONAL TO APPLY SPEED TAPE ON THE REPAIR MATERIAL FOR THE DENT.

IF THE DENT DAMAGE DOES NOT AGREE WITH THE LIMITS GIVEN HERE:

- DO NOT FILL THE DENT
- REPAIR THE DENT AS GIVEN IN SRM 57-50-3.

[C] FLIGHT OPERATION IS NOT PERMITTED IF LEADING EDGE ROUGHNESS IS EQUIVALENT TO OR GREATER THAN THAT OF 240 GRIT SANDPAPER. REFER TO 57-50-3, FIG. 6 FOR LEADING EDGE EROSION REPAIR. WHEN INSPECTING FOR EROSION OR PERFORMING EROSION REPAIR, SYMMETRY BETWEEN LEFT AND RIGHT WING SHOULD BE MAINTAINED WITH RESPECT TO EROSION COATING.

Allowable Damage - Wing Leading Edge Slats
Figure 2 (Sheet 2)

BOEING PROPRIETARY - Copyright © - Unpublished Work - See title page for details.

NOTES (CONTINUED)

[D] IT IS RECOMMENDED TO REMOVE MOISTURE FROM THE DAMAGED AREA WHEN THE NECESSARY EQUIPMENT IS AVAILABLE. USE VACUUM AND HEAT (A MAXIMUM OF 150°F (66°C)) TO REMOVE THAT MOISTURE. CLEAN THE DAMAGED AREA. SEAL THE DAMAGED AREA WITH ALUMINUM FOIL TAPE (SPEED TAPE) 3M-Y436 OR AN EQUIVALENT. KEEP THE QUANTITY OF SPEED TAPE TO A MINIMUM.

KEEP A RECORD OF THE LOCATION WHERE SPEED TAPE IS INSTALLED. REMOVE THE SPEED TAPE TO MAKE AN INSPECTION OF THE LOCATION EACH 150 FLIGHT HOURS AFTER THE TAPE IS APPLIED. REPLACE THE TAPE IF IT STARTS TO COME OFF OR DETERIORATION IS FOUND. IF THE DAMAGE BECOMES LARGER, INSTALL A PERMANENT REPAIR. THE DAMAGE MUST BE REPAIRED AT OR BEFORE THE SUBSEQUENT "C" CHECK.

[E] CLEAN UP THE DAMAGE IN THE WEB ONLY TO A MAXIMUM HOLE DIAMETER OF 0.75 INCH AND NOT NEARER THAN 2.0 INCH TO:

- A FASTENER HOLE
- THE EDGE OF A PART
- OR OTHER DAMAGE LOCATIONS
- AND NOT NEARER THAN 1.0 INCH TO THE UPPER OR LOWER FLANGES.

REPAIR ALL OTHER HOLES

[F] CHECK FOR DELAMINATION AROUND ALL DAMAGE, IN CRITICAL AREAS, AND NEAR FITTINGS AND SPARS. ALSO CHECK IN THE AREA NEAR UPPER AND LOWER CHORDS. THE DISTANCE BETWEEN ADJACENT DELAMINATED AREAS MUST BE GREATER THAN ONE HALF THE MAXIMUM DIMENSION OF THE LARGER AREA.

[G] DENTS ARE PERMITTED IN THE WEB ONLY AS SHOWN IN DETAIL III. DENTS MUST BE A MINIMUM OF 1.0 INCH AWAY FROM THE FLANGES. THE DISTANCE BETWEEN ADJACENT DENTS MUST BE GREATER THAN ONE-HALF THE MAXIMUM DIMENSION OF THE LARGEST DENTED AREA.

[H] AS AN INTERIM MEASURE, CLEAN UP HOLES AND PUNCTURES NEAR EDGES AS SHOWN IN DETAIL VI. SEE NOTE [Q]. AS AN INTERIM MEASURE FOR OTHER HOLES AND PUNCTURES, TRIM FACE SKIN AROUND HOLES AND PUNCTURES TO A SMOOTH CIRCULAR OR OVAL SHAPE. PREPARE SURFACE AS GIVEN IN NOTE [D].

[I] CRACKS ARE NOT PERMITTED EXCEPT FOR EDGE CRACKS WHICH MUST BE REMOVED AS SHOWN IN DETAILS V AND VI

[J] SCRATCHES ARE PERMITTED IN ALL DIRECTIONS IF NO SCRATCH GOES THROUGH A DIFFERENT SCRATCH. A SCRATCH MUST BE A MINIMUM OF 2.00 INCHES FROM AN EDGE, UPPER CHORD, LOWER CHORD, OR TRACK. IF NOT, CLEAN UP THE DAMAGE AS SHOWN IN DETAIL II.

[K] MAXIMUM ALLOWABLE DENT DIAMETER IS 2.0 INCHES. DENTS ARE NOT PERMITTED ON THE WEDGE CHORDS AT THE FORWARD EDGE. IF THE EDGE OF A DENT IS LESS THAN 2.0 INCHES FROM THE EDGE OF A PANEL, THE DENT MUST BE A DEPTH OF 0.040 INCH OR LESS. IF THE EDGE OF A DENT IS 2.0 INCHES OR MORE FROM THE EDGE OF THE PANEL, THEN THE DENT MUST BE A DEPTH OF 0.120 INCH OR LESS. THE MINIMUM A/Y RATIO FOR ALL DENTS IS 10. THE MINIMUM DISTANCE BETWEEN THE EDGE OF A DENT AND THE EDGE OF ANOTHER DENT OR OTHER DAMAGE MUST NOT BE LESS THAN THE DIAMETER OF THE LARGER DENT. IF A DENT HAS A DEPTH MORE THAN 0.120 INCH, AND IS SATISFACTORY TO ALL OF THE OTHER ALLOWABLE DENT LIMITS, IT MUST BE FILLED AND MADE SMOOTH. REFER TO SRM 51-40-1. THE FILLED DAMAGE MUST BE INSPECTED AT EACH AIRPLANE "A" CHECK AND REPAIRED BY THE NEXT "C" CHECK. SEE DETAIL VII.

[L] DAMAGE TO A MAXIMUM DIMENSION OF 2.25 INCHES IS PERMITTED IN THE HONEYCOMB AREA. THE DAMAGE MUST BE A MINIMUM OF 4D EDGE TO EDGE FROM OTHER DAMAGE. THE DAMAGE MUST ALSO BE A MINIMUM OF 1.0 INCH FROM THE THE EDGE OF A PANEL. A MAXIMUM DELAMINATION OF 0.10 INCH IS PERMITTED ON THE EDGES OF A PANEL. SEAL THE DAMAGE ON THE EDGE AS GIVEN IN NOTE [Q]. REPAIR THE DELAMINATION IN THE HONEYCOMB AREA AS GIVEN IN SRM 51-40 AT OR BEFORE THE NEXT "C" CHECK.

[M] THE MAXIMUM LENGTH OF CRACK PERMITTED IN THE HONEYCOMB AREA IS 1.50 INCHES. STOP DRILL THE ENDS OF THE CRACK WITH A 0.19 INCH DIAMETER HOLE. REFER TO SRM 51-10-1 AND SEE NOTE [D]. CLEAN UP CRACKS ON THE EDGES AS SHOWN IN DETAIL VI. SEE NOTE [Q].

[N] CLEAN UP THE DAMAGE TO A MAXIMUM HOLE DIAMETER OF 0.25 INCH AND NOT NEARER THAN 1.0 INCH TO:

- A FASTENER HOLE
- THE EDGE OF A PART
- OR OTHER DAMAGE LOCATIONS.

ONE HOLE IN 15.0 SQUARE INCHES OF PANEL IS PERMITTED. SEE NOTE [D].

[O] REMOVE THE DAMAGE AS SHOWN IN DETAIL II.

[P] DAMAGE TO EDGES OF ALUMINUM HONEYCOMB TRAILING EDGE WEDGES SHOULD BE BLENDED OUT TO THE LIMITATIONS GIVEN. CUMULATIVE LENGTH OF ALL BLENDOUTS FOR EACH EDGE MUST NOT EXCEED 15% OF EDGE LENGTH.

Allowable Damage - Wing Leading Edge Slats
Figure 2 (Sheet 3)

NOTES CONTINUED

[Q] CLEAN UP CRACKS AS SHOWN IN DETAIL VI. CRACKS AND DELAMINATIONS ON THE EDGE UP TO A LENGTH OF 2.0 INCHES ALONG THE SPAN AND A WIDTH OF 1.5 INCHES MUST BE SEALED AS FOLLOWS:

- APPLY BMS 5-95 TO DAMAGED AREA
- APPLY ONE LAYER OF SPEED TAPE WHICH EXTENDS 2 INCHES ALL AROUND THE DAMAGE. SEE NOTE [D]
- APPLY A SECOND LAYER AROUND THE EDGES OF THE FIRST LAYER OF SPEED TAPE
- BOTH LAYERS OF SPEED TAPE MUST BE WOUND AROUND THE EDGE OF THE PANELS, ESPECIALLY THE TRAILING EDGES.

THESE DAMAGE LOCATIONS MUST BE A MINIMUM OF 10D (EDGE TO EDGE) FROM THE NEAREST HOLE OR OTHER DAMAGED LOCATIONS ALONG THE SAME EDGE

[R] CLEAN UP THE DAMAGE TO A MAXIMUM HOLE DIAMETER OF 0.25 INCH AND NOT NEARER THAN 1.0 INCH TO:

- A FASTENER HOLE
- THE EDGE OF A PART
- OR OTHER DAMAGE LOCATIONS.

INSTALL A 2117-T3 OR -T4 ALUMINUM RIVET WET WITH BMS 5-95 SEALANT IN THE HOLE. REPAIR ALL OTHER HOLES

[S] DENTS ARE PERMITTED AS SHOWN IN DETAIL III. DENTS THAT ARE LARGER THAN THE LIMITS GIVEN IN DETAIL III MUST BE REPAIRED. REFER TO SRM 51-40-1. FILL OR REPAIR DENTS SMALLER THAN THE LIMITS IN DETAIL III, BUT SHOW ONE OR MORE OF THESE CONDITIONS:

- THE DISTANCE BETWEEN DENTS THAT ARE NOT FILLED OR OTHER DAMAGE LOCATIONS IS LESS THAN ONE-HALF THE MAXIMUM DIMENSION OF THE LARGER DAMAGED AREA
- THE DEPTH (Y) OF THE DENT NOT FILLED IS LARGER THAN 0.10 INCH AFT OF THE NOSE BEAM OR 0.06 INCH FORWARD OF THE NOSE BEAM
- THE NUMBER OF DENTS NOT FILLED FORWARD OF THE NOSE BEAM IS LARGER THAN 10 ON EACH SLAT.

[T] DENTS ARE PERMITTED AS SHOWN IN DETAIL III. THE DISTANCE BETWEEN ADJACENT DENTS MUST BE GREATER THAN ONE-HALF THE MAXIMUM DIMENSION OF THE LARGEST DENTED AREA.

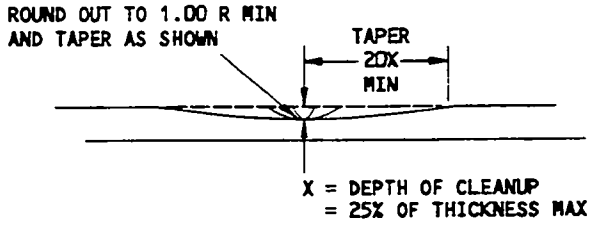

SECTION B-B

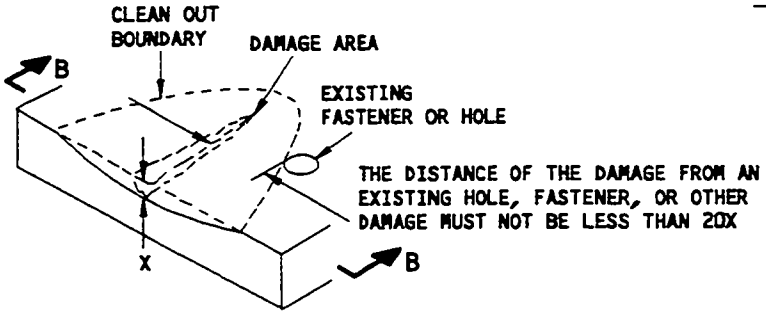

REMOVAL OF NICK, GOUGE, CORROSION, AND SCRATCH DAMAGE ON A SURFACE
(DAMAGE AT EDGE SHOWN; DAMAGE AWAY FROM EDGE SIMILAR)
DETAIL II

Allowable Damage - Wing Leading Edge Slats
Figure 2 (Sheet 4)

E74381

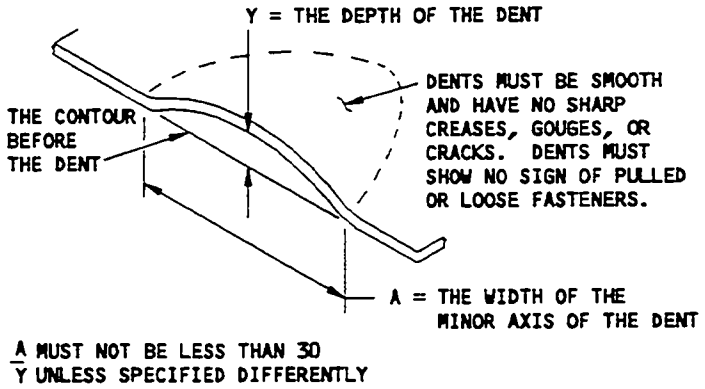

DENT DAMAGE PERMITTED
DETAIL III

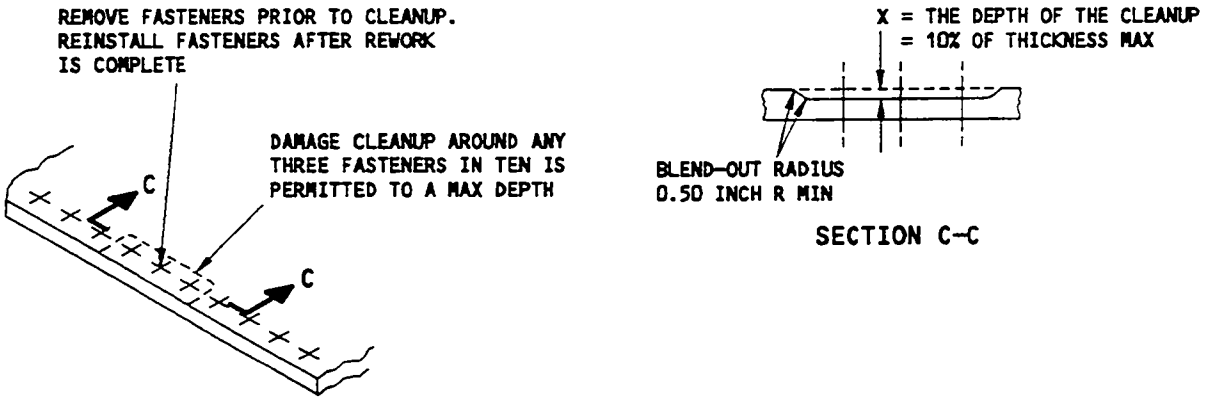

SECTION C-C

DAMAGE CLEANUP
DETAIL IV

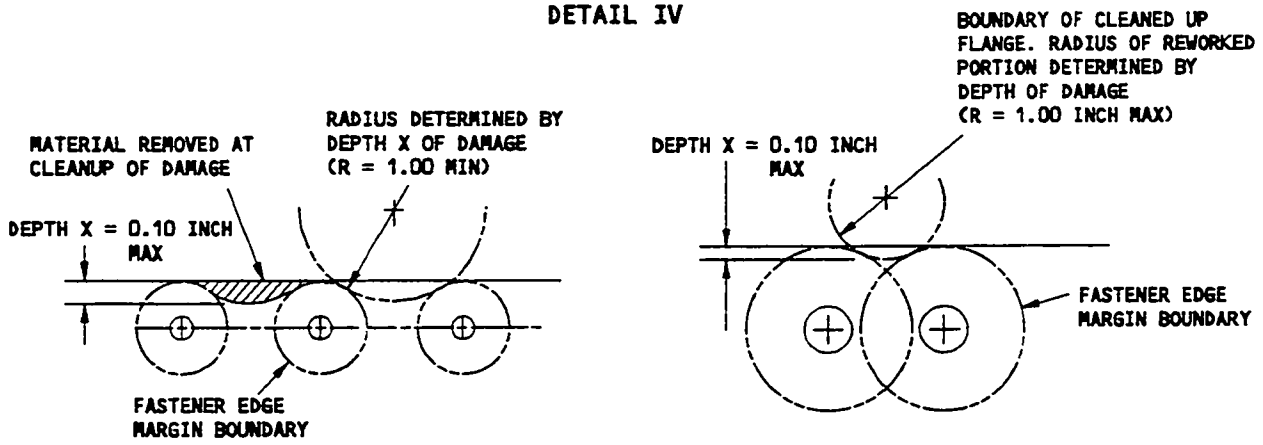

DAMAGE CLEANUP OF EDGES WHERE FASTENER EDGE MARGINS DO NOT OVERLAP

DAMAGE CLEANUP OF EDGES WHERE FASTENER EDGE MARGINS OVERLAP

DETAIL V

Allowable Damage - Wing Leading Edge Slats
Figure 2 (Sheet 5)

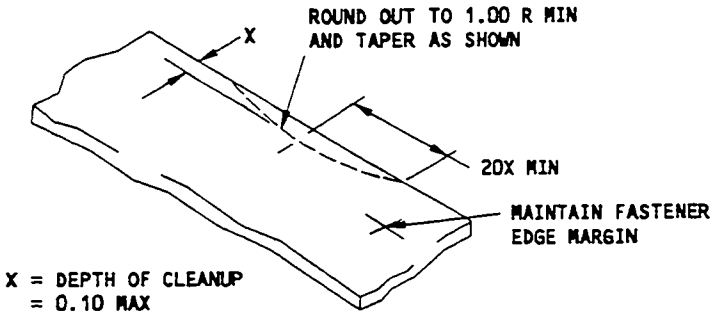

REMOVAL OF DAMAGE ON AN EDGE
DETAIL VI

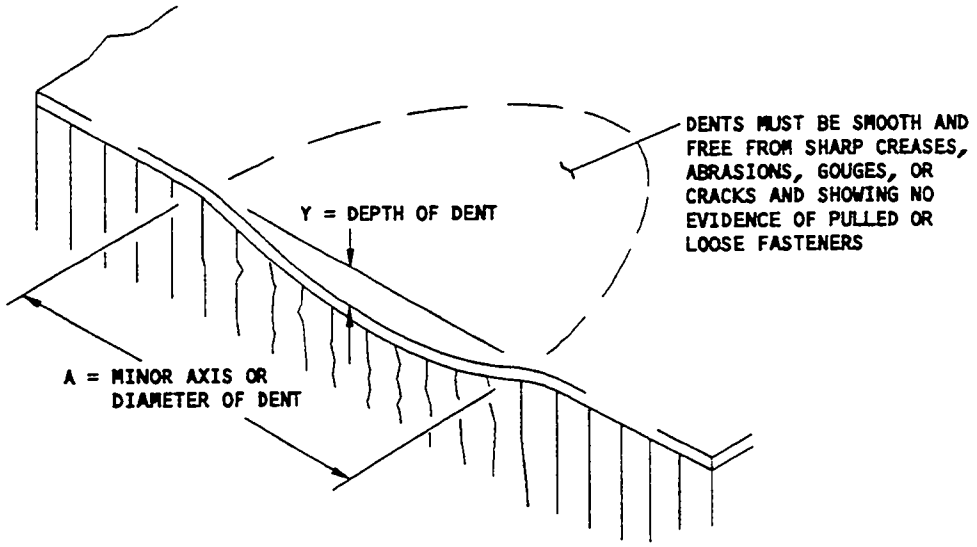

$\frac{A}{Y}$ VALUE MUST NOT BE LESS THAN 10

PROFILE OF PERMISSIBLE DENTS ON TE WEDGE (ALUMINUM HONEYCOMB)
DETAIL VII

Allowable Damage - Wing Leading Edge Slats
Figure 2 (Sheet 6)

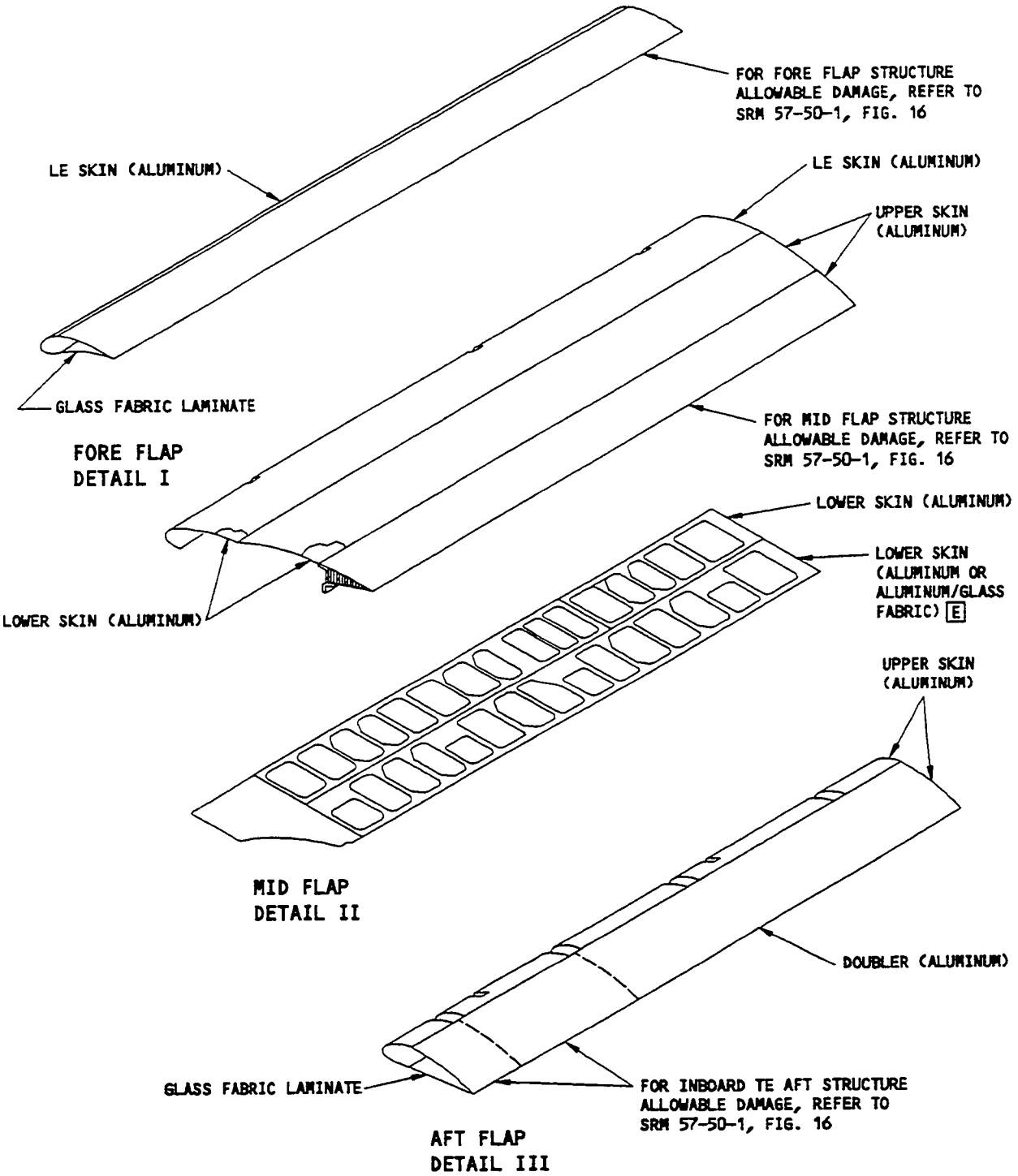

Wing Inboard Trailing Edge Flap Skin Allowable Damage
Figure 3 (Sheet 1)

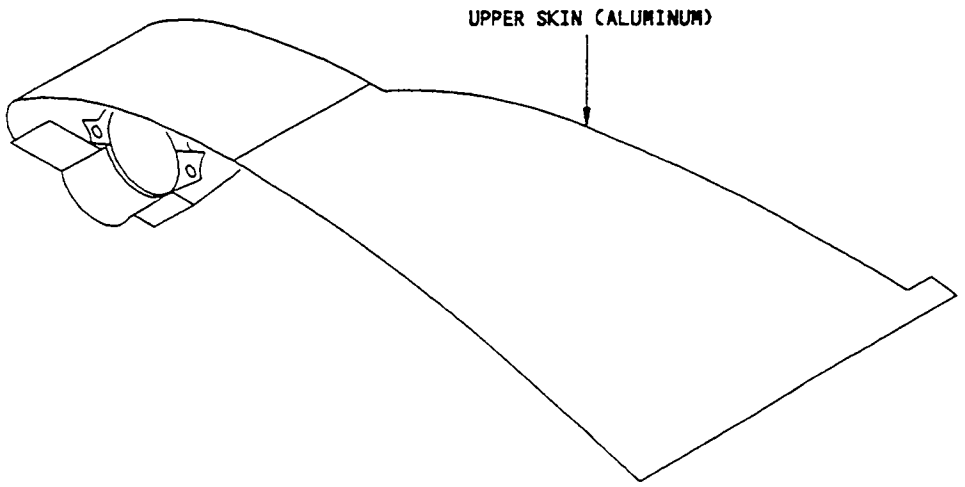

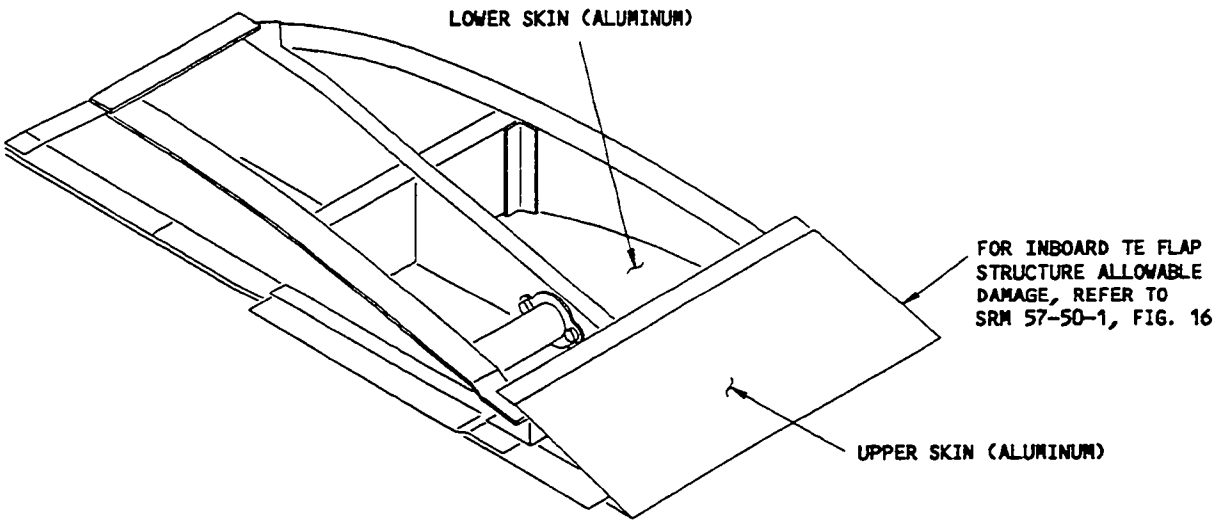

FLIPPER FLAP
DETAIL IV

Wing Inboard Trailing Edge Flap Skin Allowable Damage
Figure 3 (Sheet 2)

DESCRIPTION	CRACKS	NICKS, GOUGES, SCRATCHES AND CORROSION	DENTS	HOLES AND PUNCTURES
LEADING EDGE SKINS, UPPER AND LOWER SKIN	A	B	C	D

ALLOWABLE DAMAGE FOR DETAILS I,II,III, AND IV

NOTES

- THE ALLOWABLE DAMAGE LIMITS GIVEN IN THIS FIGURE WILL NOT HAVE AN EFFECT ON A STRUCTURALLY SIGNIFICANT ITEM (SSI) GIVEN IN SRM 51-00-4, FIG. 3. THUS, NO CHANGE TO THE SUPPLEMENTAL STRUCTURAL INSPECTION DOCUMENT (SSID) INSPECTION PROGRAM IS NECESSARY.
- ALL DIMENSIONS ARE IN INCHES UNLESS GIVEN DIFFERENTLY.
- REFER TO AMM 51-21 FOR PROTECTIVE FINISH TREATMENT OF REPAIRED AREAS.
- REFER TO SRM 51-10-1 FOR DAMAGE CLASSIFICATION.
- REFER TO SRM 51-10-2 FOR PROTECTIVE TREATMENT OF METAL REPAIR PARTS. APPLY A CHEMICAL CONVERSION COATING TO BARE ALUMINUM SURFACES.
- REFER TO SRM 51-10-6 FOR CORROSION DAMAGE CLEANUP.
- REFER TO SRM 51-30-6 FOR FASTENER EDGE MARGINS.
- REFER TO SRM 51-70 FOR AERODYNAMIC SMOOTHNESS.
- KEEP RECORDS OF THE LOCATION OF ALL ALLOWABLE DAMAGE THAT IS NOT REPAIRED. MAKE AN INSPECTION FREQUENTLY AND DO PERMANENT REPAIRS IMMEDIATELY IF DAMAGE BECOMES LARGER.

A CRACKS ARE NOT PERMITTED.

B REMOVE NICKS, GOUGES, SCRATCHES, AND CORROSION AS SHOWN IN DETAILS V, VI, VIII, AND IX.

C DENTS ARE PERMITTED AS SHOWN IN DETAIL VII. DENTS THAT ARE LARGER THAN THE LIMITS GIVEN IN DETAIL VII MUST BE FILLED WITH POTTING COMPOUND. REFER TO SRM 51-40-1. FILL OR REPAIR DENTS THAT ARE SMALLER THAN THE LIMITS GIVEN IN DETAIL VII, BUT SHOW ONE OR MORE OF THE CONDITIONS THAT FOLLOW:

- THE DISTANCE BETWEEN DENTS THAT ARE NOT FILLED IS LESS THAN HALF OF THE MAXIMUM DIMENSION OF THE LARGER DAMAGED AREA
- THE DISTANCE BETWEEN A DENT THAT IS NOT FILLED AND A DIFFERENT LOCATION OF DAMAGE IS LESS THAN HALF OF THE MAXIMUM DIMENSION OF THE LARGER DAMAGED AREA
- THE DEPTH (Y) OF A DENT THAT IS NOT FILLED IS LARGER THAN 0.125.

D HOLES AND PUNCTURES ARE NOT PERMITTED.

E REFER TO SRM 57-50-2, FIG. 3 FOR AIRPLANE EFFECTIVITIES.

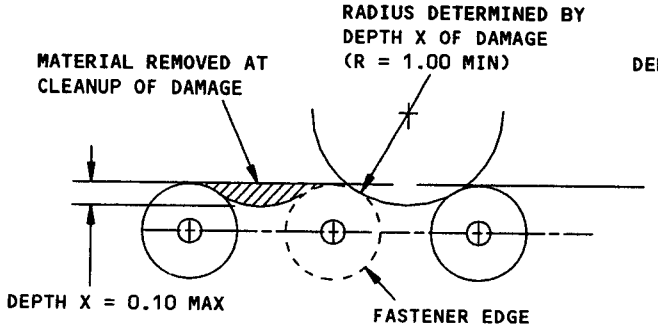

DAMAGE CLEANUP OF EDGES WHERE FASTENER EDGE MARGINS DO NOT OVERLAP

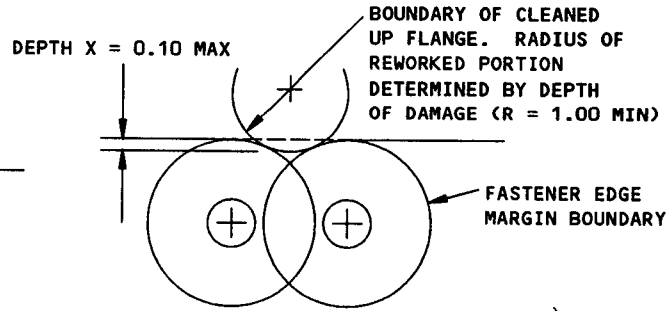

DAMAGE CLEANUP OF EDGES WHERE FASTENER EDGE MARGINS OVERLAP

DETAIL V

Wing Inboard Trailing Edge Flap Skin Allowable Damage
Figure 3 (Sheet 3)

BOEING PROPRIETARY - Copyright © - Unpublished Work - See title page for details.

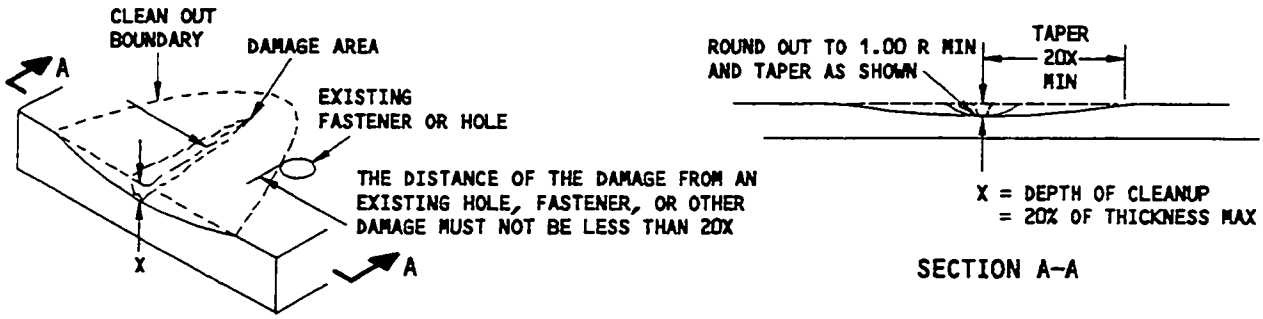

REMOVAL OF NICK, GOUGE, CORROSION, AND SCRATCH DAMAGE ON A SURFACE
(DAMAGE AT EDGE SHOWN; DAMAGE AWAY FROM EDGE SIMILAR)
DETAIL VI

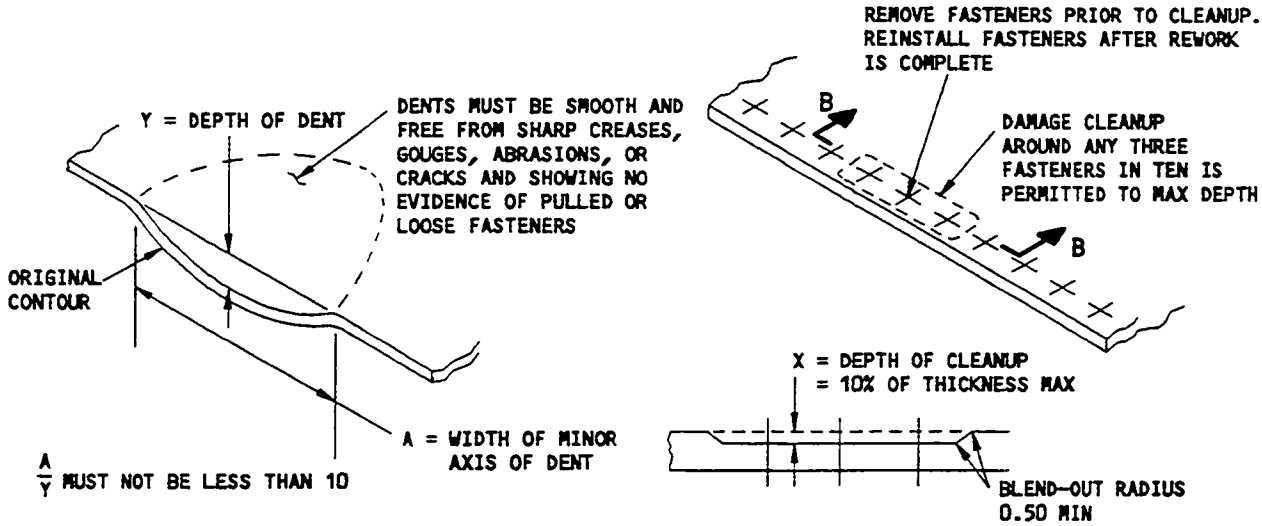

ALLOWABLE DAMAGE FOR DENT
DETAIL VII

SECTION B-B

DAMAGE CLEANUP
DETAIL VIII

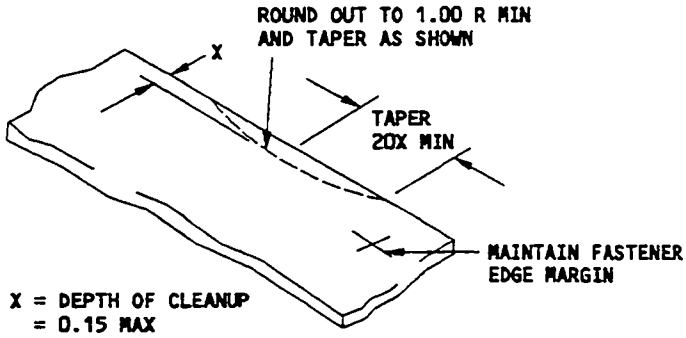

REMOVAL OF DAMAGE ON AN EDGE
DETAIL IX

Wing Inboard Trailing Edge Flap Skin Allowable Damage
Figure 3 (Sheet 4)

E48855

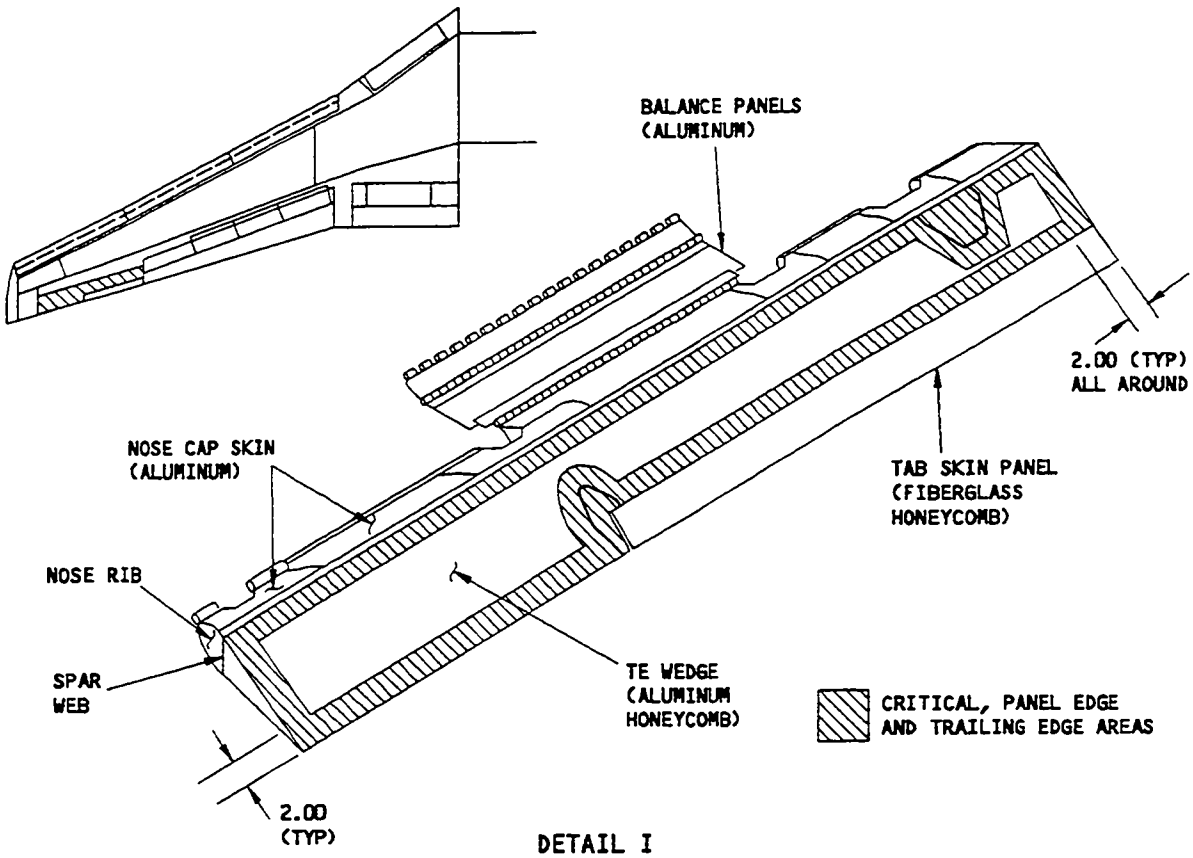

DETAIL I

DESCRIPTION	CRACKS	NICKS, GOUGES, SCRATCHES AND CORROSION	DENTS	PUNCTURES AND HOLES	DELAMINATION
NOSE CAP SKIN (ALUMINUM)	C	D	E	M	—
NOSE RIB	C	D	G	M	—
TE WEDGE (ALUMINUM HONEYCOMB) Z	T B	D V	S R	J K L	O P L
BALANCE PANELS (ALUMINUM)	C	D	E	H	—
TAB SKIN PANEL (FIBERGLASS HONEYCOMB)	W	X	F R	I	N
TAB NOSE CAP SKIN (ALUMINUM)	C	D	E	H	—
SPAR WEB (ALUMINUM)	C	D Y	G	H Y	—

TABLE I

Allowable Damage - Ailerons
Figure 4 (Sheet 1)

NOTES

- THE ALLOWABLE DAMAGE LIMITS GIVEN IN THIS FIGURE WILL NOT HAVE AN EFFECT ON A STRUCTURALLY SIGNIFICANT ITEM (SSI) GIVEN IN SRM 51-00-4, FIG. 3. THUS, NO CHANGE TO THE SUPPLEMENTAL STRUCTURAL INSPECTION DOCUMENT (SSID) INSPECTION PROGRAM IS NECESSARY.
- THESE ALLOWABLE DAMAGE LIMITS HAVE FAA APPROVAL IF THE INSPECTIONS SHOWN IN THIS FIGURE ARE COMPLETED AT THE SPECIFIED TIMES.
- ALL DIMENSIONS ARE IN INCHES UNLESS GIVEN DIFFERENTLY.
- REFER TO AMM 51-21 FOR PROTECTIVE FINISH TREATMENT OF REPAIRED AREAS.
- REFER TO SRM 51-10-1 FOR DAMAGE CLASSIFICATION.
- REFER TO SRM 51-10-2 FOR PROTECTIVE TREATMENT OF METAL REPAIR PARTS. APPLY A CHEMICAL CONVERSION COATING TO BARE ALUMINUM SURFACES.
- REFER TO SRM 51-10-6 FOR CORROSION DAMAGE CLEANUP.
- REFER TO SRM 51-30-6 FOR FASTENER EDGE MARGINS.
- REFER TO SRM 51-40-6 FOR ALUMINUM HONEYCOMB STRUCTURE REPAIRS.
- REFER TO SRM 51-40-9 FOR THE REPAIR OF FIBERGLASS HONEYCOMB STRUCTURE.
- REFER TO SRM 51-70 FOR AERODYNAMIC SMOOTHNESS.
- NICKS, GOUGES, AND SCRATCHES THAT DO NOT GO ALL THE WAY THROUGH CLAD SURFACES CAN BE IGNORED. MAKE AN INSPECTION OF THE DEPTH OF PENETRATION AS SHOWN IN SRM 51-10-1.
- KEEP RECORDS OF THE LOCATION OF ALL ALLOWABLE DAMAGE. MAKE AN INSPECTION FREQUENTLY AND DO PERMANENT REPAIRS IMMEDIATELY IF THE DAMAGE BECOMES LARGER.

[A] IT IS RECOMMENDED TO REMOVE MOISTURE FROM THE DAMAGED AREA. USE VACUUM AND HEAT (A MAXIMUM OF 150°F (66°C) TO REMOVE THAT MOISTURE. CLEAN THE DAMAGED AREA. SEAL THE DAMAGED AREA WITH ALUMINUM FOIL TAPE (SPEED TAPE) 3M-Y436 OR AN EQUIVALENT. KEEP THE QUANTITY OF SPEED TAPE TO A MINIMUM.

THE AMOUNT OF SPEED TAPE USED CAN CHANGE THE BALANCE MOMENT OF THE AILERON. IF NECESSARY, BALANCE THE AILERON. REFER TO SRM 51-80-1, 51-80-2, AND 51-80-3.

KEEP A RECORD OF THE LOCATION WHERE SPEED TAPE IS INSTALLED. REMOVE THE SPEED TAPE TO MAKE AN INSPECTION OF THE LOCATION EACH 150 FLIGHT HOURS AFTER THE TAPE IS APPLIED. REPLACE THE TAPE IF IT STARTS TO COME OFF OR DETERIORATION IS FOUND. IF THE DAMAGE BECOMES LARGER, INSTALL A PERMANENT REPAIR. THE DAMAGE MUST BE REPAIRED AT OR BEFORE THE SUBSEQUENT "C" CHECK.

[B] CLEAN UP CRACKS ON THE EDGES AS SHOWN IN DETAILS V AND VI. THE MAXIMUM LENGTH OF A CRACK PERMITTED IN THE NON-CRITICAL AREA OF HONEYCOMB IS 1.50 INCHES. STOP DRILL THE ENDS OF THE CRACK WITH A 0.19 INCH DIAMETER HOLE. REFER TO SRM 51-10-1 AND NOTES [A] [Q] .

[C] CRACKS ARE NOT PERMITTED EXCEPT FOR EDGE CRACKS WHICH MUST BE REMOVED AS SHOWN IN DETAILS V AND VI.

[D] REMOVE NICKS, GOUGES, SCRATCHES, AND CORROSION AS SHOWN IN DETAILS II, IV, V, AND VI.

[E] DENTS ARE PERMITTED AS SHOWN IN DETAIL III. DENTS THAT ARE LARGER THAN THE LIMITS GIVEN IN DETAIL III MUST BE REPAIRED. REFER TO SRM 51-40-1. FILL OR REPAIR DENTS THAT ARE SMALLER THAN THE LIMITS GIVEN IN DETAIL III BUT SHOW ONE OR MORE OF THE CONDITIONS THAT FOLLOW:

- THE DISTANCE BETWEEN DENTS THAT ARE NOT FILLED IS LESS THAN HALF OF THE MAXIMUM DIMENSION OF THE LARGER DAMAGED AREA
- THE DEPTH (Y) OF A DENT THAT IS NOT FILLED IS LARGER THAN 0.10 INCH.

[F] DENTS FREQUENTLY CAUSE FIBER DAMAGE OR DELAMINATION. THE DAMAGE MAY NOT BE APPARENT WITH A VISUAL OR TAP TEST METHOD OF DETECTION. DENTS UP TO 0.5 INCH DIAMETER (D) ARE PERMITTED. THE DENT MUST BE A MINIMUM OF 6.0 INCHES (EDGE TO EDGE) FROM ANY OTHER DAMAGE LOCATION. THE DENT MUST ALSO BE A MINIMUM OF 3.0 INCHES FROM ANY FASTENER HOLE OR PART EDGE. PREPARE DAMAGE AS GIVEN IN NOTE [A]. IF YOU FIND FIBER DAMAGE OR DELAMINATION SEE TABLE I AND NOTE [A] .

[G] DENTS ARE PERMITTED AS SHOWN IN DETAIL III.

Allowable Damage - Ailerons
Figure 4 (Sheet 2)

BOEING PROPRIETARY - Copyright © - Unpublished Work - See title page for details.

NOTES (CONTINUED)

[H] CLEAN UP THE DAMAGE TO A MAXIMUM HOLE DIAMETER OF 0.25 INCH AND NOT NEARER THAN 1.0 INCH TO:

- A FASTENER HOLE
- THE EDGE OF A PART
- OR OTHER DAMAGE LOCATIONS.

ONE HOLE FOR EVERY 7.0 SQUARE INCHES OF PANEL IS PERMITTED.

INSTALL A 2117-T3 OR -T4 ALUMINUM RIVET WET WITH BMS 5-95 SEALANT IN THE HOLE. REPAIR ALL OTHER HOLES.

[I] A MAXIMUM DAMAGE OF 1 SQUARE INCH IS PERMITTED AS LONG AS THE DAMAGE IS NOT NEARER THAN 6.0D TO:

- A FASTENER HOLE
- THE EDGE OF A PART
- OR OTHER DAMAGE LOCATIONS.

DO NOT CLEAN UP THE DAMAGE EXCEPT TO REMOVE RESIN BURRS THAT HAVE EXTENDED INTO THE SURFACE CONTOUR. SEE NOTE [A].

[J] AS AN INTERIM MEASURE, CLEAN UP HOLES AND PUNCTURES NEAR EDGES AS SHOWN IN DETAIL VIII AND INSTALL A PERMANENT REPAIR WITHIN 150 FLIGHT HOURS. AS AN INTERIM MEASURE FOR OTHER HOLES AND PUNCTURES, TRIM FACE SKIN AROUND HOLES AND PUNCTURES TO A SMOOTH CIRCULAR OR OVAL SHAPE. PREPARE SURFACE AS GIVEN IN NOTE [A].

[K] CLEAN UP THE DAMAGE TO A MAXIMUM HOLE DIAMETER OF 0.25 INCH AND NOT NEARER THAN 1.0 INCH TO:

- A FASTENER HOLE
- THE EDGE OF A PART
- OR OTHER DAMAGE LOCATIONS.

ONE HOLE IN 15.0 SQUARE INCHES OF PANEL IS PERMITTED. SEE NOTE [A].

[L] DAMAGE TO EDGES OF ALUMINUM HONEYCOMB TRAILING EDGE WEDGES SHOULD BE BLENDED OUT TO THE LIMITATIONS GIVEN. CUMULATIVE LENGTH OF BLENDOUT FOR EACH EDGE MUST NOT EXCEED 15% OF EDGE LENGTH.

[M] CLEAN UP THE DAMAGE TO A MAXIMUM HOLE DIAMETER OF 0.25 INCH AND NOT NEARER THAN 1.0 INCH TO:

- A FASTENER HOLE
- THE EDGE OF A PART
- OR OTHER DAMAGE LOCATIONS.

INSTALL A 2117-T3 OR -T4 ALUMINUM RIVET WET WITH BMS 5-95 SEALANT IN THE HOLE. REPAIR ALL OTHER HOLES.

[N] DELAMINATION IS PERMITTED UP TO A DIAMETER OF 0.50 INCH FOR A SQUARE FOOT OF PANEL AREA. THE DAMAGE MUST BE 6 INCHES MINIMUM FROM OTHER DAMAGE LOCATIONS AND 1.0 INCH MINIMUM FROM A HOLE OR PART EDGE. A MAXIMUM DELAMINATION OF 0.10 INCH FROM AN EDGE IS PERMITTED. SEE NOTES [A] [Q].

[O] CHECK FOR DELAMINATION AROUND ALL DAMAGE, IN CRITICAL AREAS, AND NEAR FITTINGS AND SPARS. ALSO CHECK IN THE AREA NEAR UPPER AND LOWER CHORDS. THE DISTANCE BETWEEN ADJACENT DELAMINATED AREAS MUST BE GREATER THAN ONE HALF THE MAXIMUM DIMENSION OF THE LARGER AREA. FOR CRITICAL AREA DATA, SEE NOTE [Z].

[P] DAMAGE TO A MAXIMUM DIMENSION (D) OF 2.00 INCHES IS PERMITTED IN THE HONEYCOMB AREA. THE DAMAGE MUST BE A MINIMUM OF 4D (EDGE TO EDGE) FROM OTHER DAMAGE. THE DAMAGE MUST ALSO BE A MINIMUM 1.0 INCH FROM THE EDGE OF A PANEL. A MAXIMUM DELAMINATION OF 0.010 INCH IS PERMITTED ON THE EDGES OF A PANEL. SEAL THE DAMAGE ON THE EDGE AS GIVEN IN NOTE [A].

REPAIR THE DELAMINATION IN THE HONEYCOMB AREA AS GIVEN IN SRM 51-40-6 AT OR BEFORE THE NEXT "C" CHECK. SEE DETAIL VIII AND NOTE [Q].

[Q] CRACKS AND DELAMINATIONS ON THE EDGE UP TO A LENGTH OF 2.0 INCHES ALONG THE SPAN AND A WIDTH OF 1.5 INCHES CAN BE SEALED AS FOLLOWS:

- APPLY ONE LAYER OF SPEED TAPE WHICH EXTENDS 2 INCHES ALL AROUND THE DAMAGE. SEE NOTE [A]
- APPLY A SECOND LAYER AROUND THE EDGES OF THE FIRST LAYER OF SPEED TAPE
- BOTH LAYERS OF SPEED TAPE MUST BE WOUND AROUND THE EDGE OF THE PANELS, ESPECIALLY THE TRAILING EDGES.

DAMAGE LOCATIONS MUST BE A MINIMUM OF 10 TIMES THE DAMAGE LENGTH (EDGE TO EDGE) FROM OTHER DAMAGE LOCATIONS ALONG THE SAME EDGE.

[R] IF DELAMINATION IS FOUND AT A DENT LOCATION, USE THE LIMITS APPLICABLE TO DELAMINATION.

[S] DENTS ARE PERMITTED AS SHOWN IN DETAIL III, VII, AND VIII TO A MAXIMUM DIMENSION (D) OF 2.00 INCHES. DENTS THAT ARE LARGER THAN THE LIMITS GIVEN IN THESE DETAILS MUST BE REPAIRED. REFER TO SRM 51-40-1. FILL OR REPAIR DENTS THAT ARE SMALLER THAN THE LIMITS GIVEN IN DETAIL III, VII, AND VIII, BUT SHOW ONE OR MORE OF THE FOLLOWING CONDITIONS:

- THE DISTANCE BETWEEN DENTS THAT ARE NOT FILLED AND OTHER DAMAGE LOCATIONS IS LESS THAN HALF THE MAXIMUM DIMENSION OF THE LARGER DAMAGED AREA
- THE DEPTH (Y) OF A DENT THAT IS NOT FILLED IS LARGER THAN 0.10 INCH.

Allowable Damage - Ailerons
Figure 4 (Sheet 3)

NOTES (CONTINUED)

[T] AS AN INTERIM MEASURE, CLEAN UP THE DAMAGE AT OR NEAR EDGES AS SHOWN IN DETAILS VI AND VIII. INSTALL A PERMANENT REPAIR WITHIN 150 FLIGHT HOURS.

[U] MIX, APPLY, AND CURE AS GIVEN IN THE MANUFACTURER'S INSTRUCTIONS.

[V] SCRATCHES ARE PERMITTED IN ALL DIRECTIONS IF NO SCRATCH GOES THROUGH A DIFFERENT SCRATCH. A SCRATCH MUST BE A MINIMUM OF 2.00 INCHES FROM AN EDGE, UPPER CHORD, LOWER CHORD, OR TRACK. IF NOT, CLEAN UP THE DAMAGE AS SHOWN IN DETAIL II.

[W] REMOVE EDGE CRACKS AS SHOWN IN DETAILS V AND VI. CRACK DAMAGE IN THE HONEYCOMB AREA IS PERMITTED UP TO 0.50 INCH IN LENGTH. THE DAMAGE MUST BE A MINIMUM OF 6.0 INCHES FROM OTHER DAMAGE LOCATIONS. THE DAMAGE MUST ALSO BE MINIMUM OF 3.0 INCHES FROM THE NEAREST FASTENER HOLE OR MATERIAL EDGE. SEE NOTES [A] AND [Q].

[X] CLEAN UP CRACKS AT OR NEAR EDGES AS SHOWN IN DETAILS V AND VI. FOR OTHER CRACKS:

- STOP DRILL THE CRACKS. REFER TO SRM 51-10-1
- DO THE PROCEDURES IN NOTES [A] AND [Q].

[Y] THE MAXIMUM AREA THAT CAN BE REMOVED FROM A CROSS SECTIONAL AREA OF THE WEB IS 20%. THIS MAXIMUM AREA INCLUDES INITIAL HOLES AND SCRATCHES.

[Z] REFER TO SRM 51-40-6 FIGURE 1 FOR ALUMINUM HONEYCOMB STRUCTURE PANEL EDGE AND TRAILING EDGE CRITICAL AREA LOCATIONS.

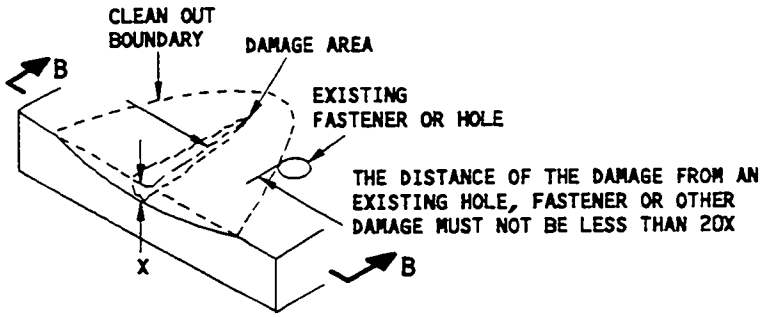

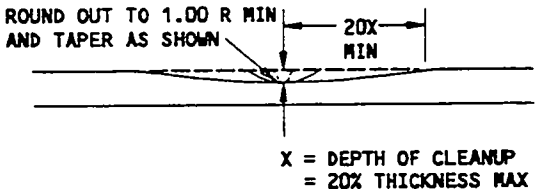

SECTION B-B

REMOVAL OF NICK, GOUGE, SCRATCH, AND CORROSION DAMAGE ON A SURFACE (DAMAGE AT EDGE SHOWN; DAMAGE AWAY FROM EDGE SIMILAR)

DETAIL II

Allowable Damage - Aileron
Figure 4 (Sheet 4)

E74669

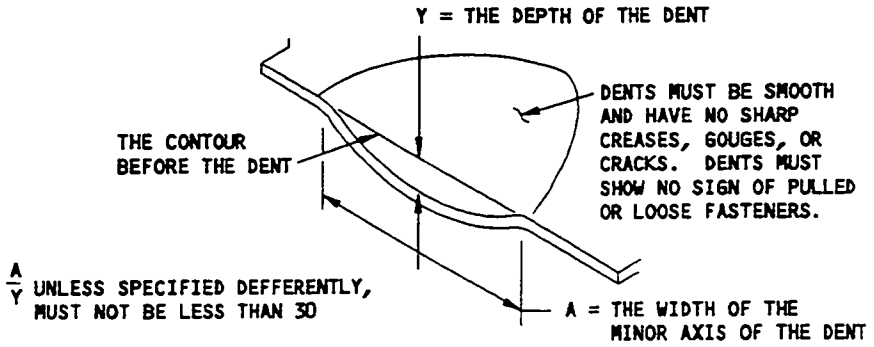

DENT DAMAGE PERMITTED
DETAIL III

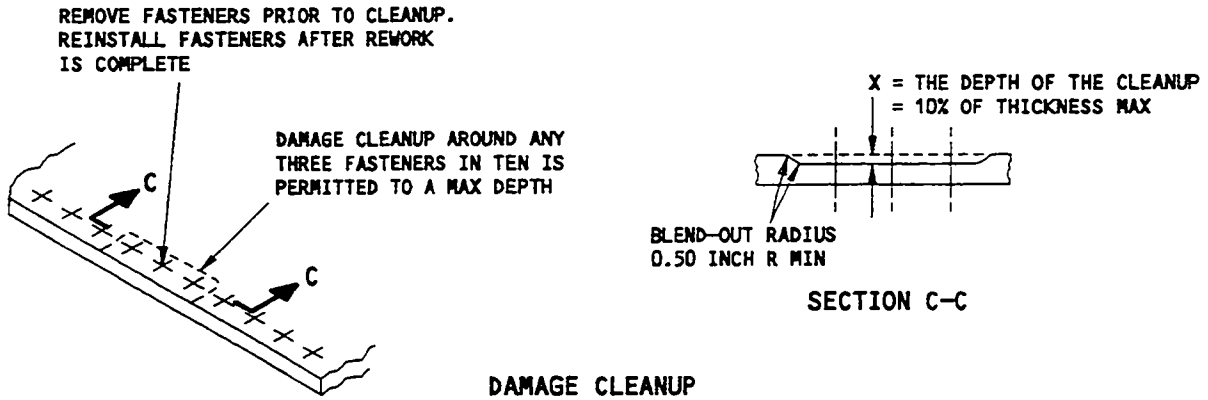

SECTION C-C

DAMAGE CLEANUP
DETAIL IV

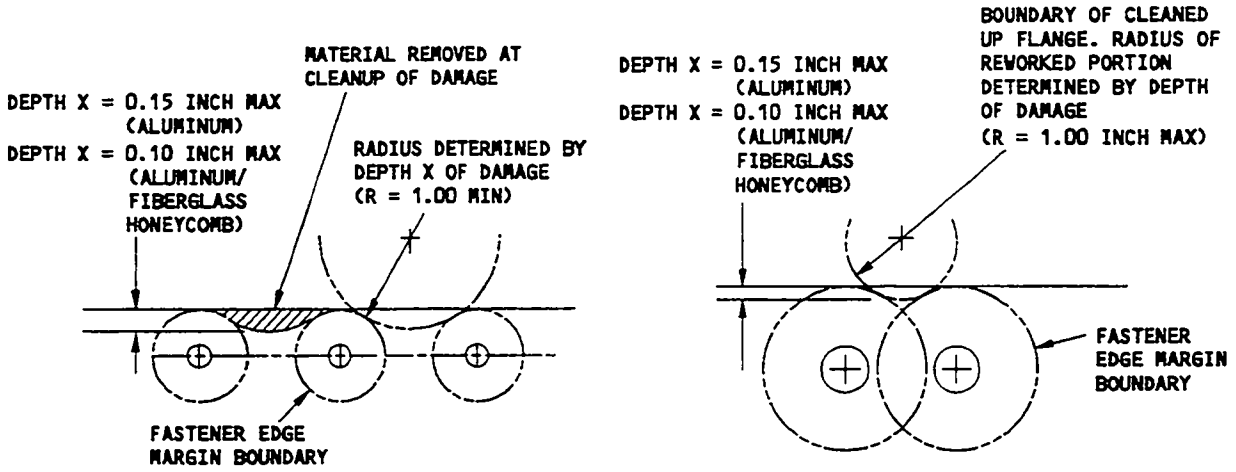

DAMAGE CLEANUP OF EDGES WHERE FASTENER EDGE MARGINS DO NOT OVERLAP

DAMAGE CLEANUP OF EDGES WHERE FASTENER EDGE MARGINS OVERLAP

DETAIL V

Allowable Damage - Ailerons
Figure 4 (Sheet 5)

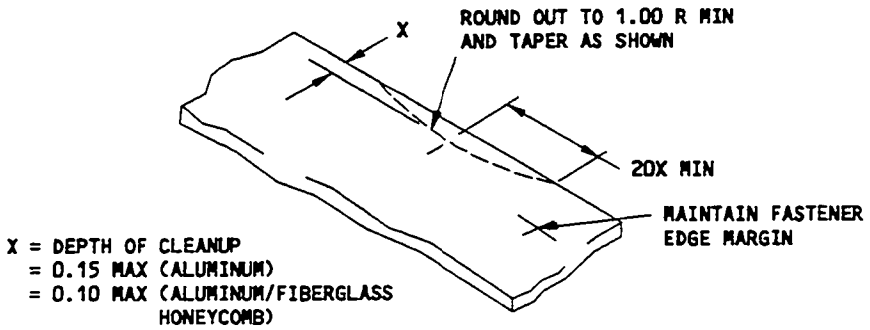

REMOVAL OF DAMAGE ON AN EDGE
DETAIL VI

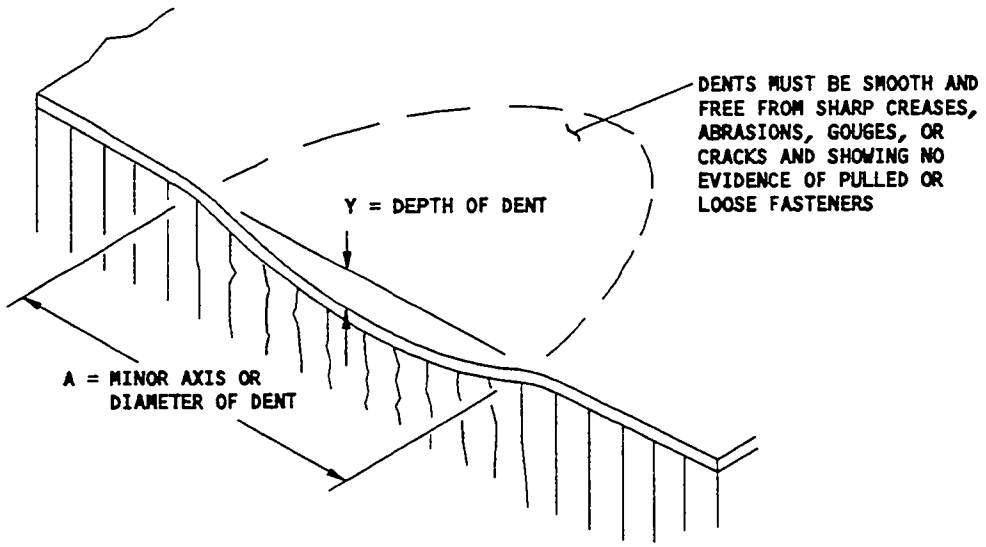

$\frac{A}{Y}$ VALUE MUST NOT BE LESS THAN 10

PROFILE OF PERMISSIBLE DENTS ON TE WEDGE (ALUMINUM HONEYCOMB)
DETAIL VII

Allowable Damage - Ailerons
Figure 4 (Sheet 6)

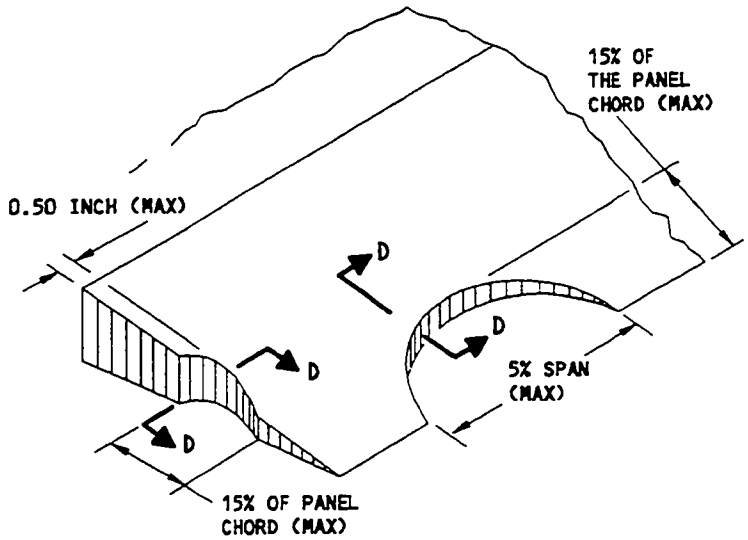

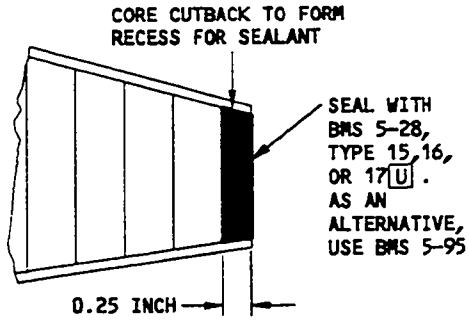

SECTION D-D

DAMAGE CLEANUP ON AFT EDGE OR SIDE EDGES OF TRAILING EDGE WEDGE
DETAIL VIII

Allowable Damage - Ailerons
Figure 4 (Sheet 7)

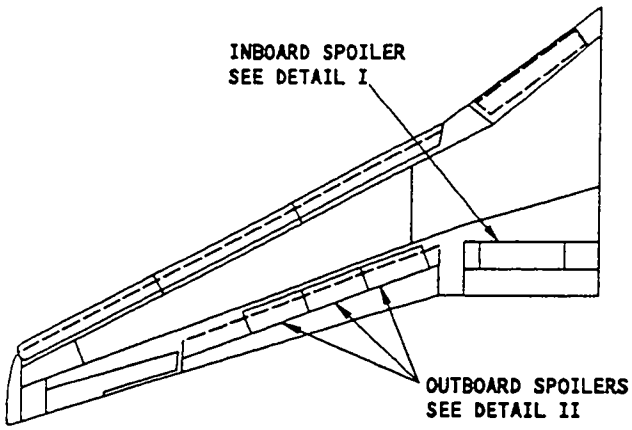

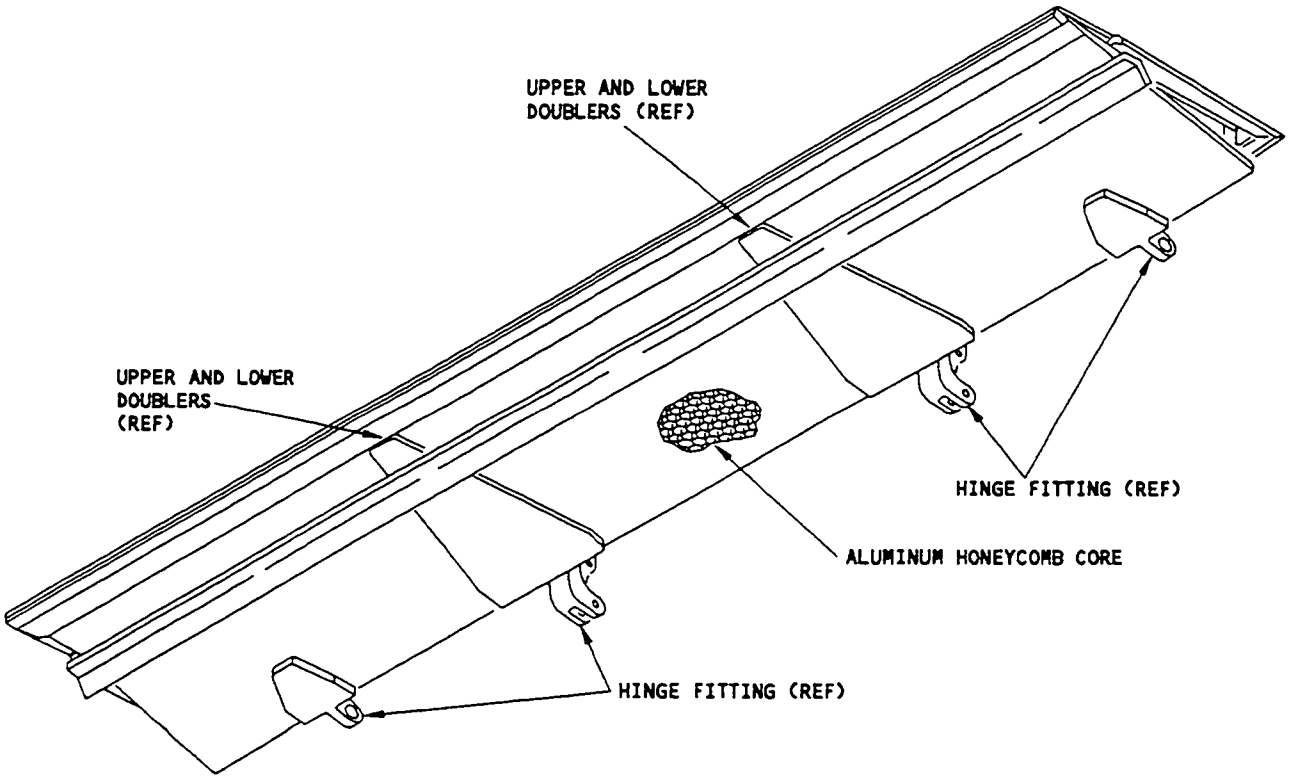

INBOARD SPOILER LOWER SURFACE SHOWN
DETAIL I

Spoiler Skin Allowable Damage - Aluminum Honeycomb Spoilers
Figure 5 (Sheet 1)

C17363

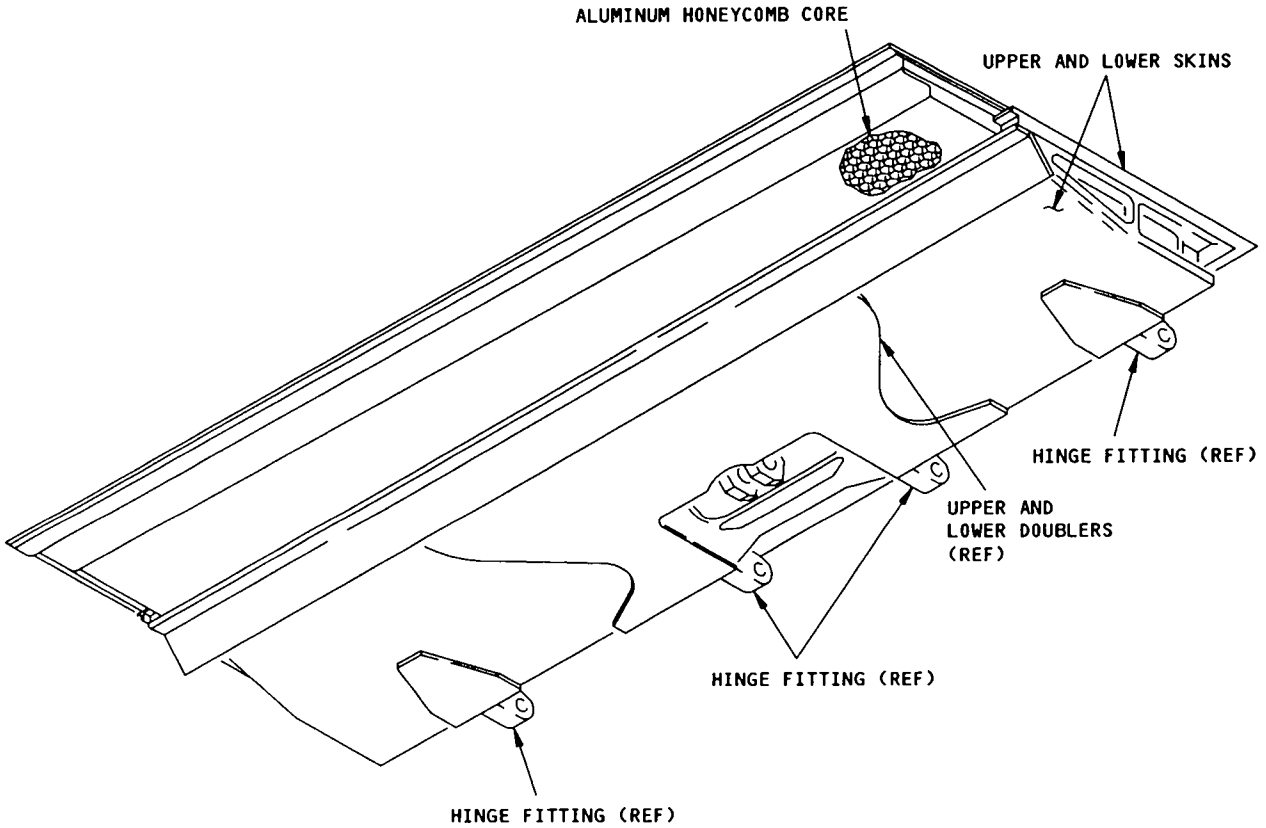

OUTBOARD SPOILERS
LOWER SURFACE SHOWN
DETAIL II

Spoiler Skin Allowable Damage - Aluminum Honeycomb Spoilers
Figure 5 (Sheet 2)

TYPE OF DAMAGE	TRAILING EDGE	PANEL EDGES OTHER THAN TRAILING EDGE	SURFACES	
			CRITICAL AREAS	NON-CRITICAL AREAS
DENTS [G]	15% OF THE PANEL CHORD 15% OF THE SPAN [C][N]	15% OF THE PANEL CHORD AND 0.50 INCH DEEP. [C]	AREA CONTAINED WITHIN A 3.00 INCH DIA CIRCLE. SEE DETAIL IX. [D][I]	25% OF THE PANEL CHORD 0.10 INCH DEEP SEE DETAIL IX. [I]
DELAMINATION [H][U]	[W]	[V][W]	THE MAXIMUM LENGTH PERMITTED IS 3.00 INCHES.	THE MAX AREA OF ONE LOCATION OF DELAMINATION = 15 IN^2. 25% OF A PANEL CHORD (MAX DIMENSION) [U]
NICKS, GOUGES, SCRATCHES, AND CORROSION [B]	NONE WITHIN 2.00 INCHES OF THE EDGE AND 1.50 INCH OF ANY FASTENERS. SEE DETAIL V.	NONE WITHIN 2.00 INCHES OF THE EDGE AND 1.50 INCH OF ANY FASTENERS. SEE DETAIL V.	15% OF THE SKIN THICKNESS AND A MAXIMUM LENGTH OF 3.00 INCHES SEE DETAIL VI.	25% OF THE SKIN THICKNESS, 25% OF THE PANEL CHORD (MAXIMUM DIMENSION) REFER TO NOTE [J].
CRACKS [U]	[W]	NOT PERMITTED AFT OF THE SPAR. [K] SEE DETAIL V FOR EDGES WHERE THERE ARE FASTENERS.	NONE [O]	15% OF THE PANEL CHORD (MAXIMUM DIMENSION) REFER TO NOTE [K][Q].
HOLES AND PUNCTURES [U]	NONE PERMITTED IN THE AREA DESCRIBED IN [E]. [M]	NONE PERMITTED IN THE AREA DESCRIBED IN [E]. [M]	NONE [O]	15% OF THE PANEL CHORD (MAXIMUM DIMENSION) REFER TO NOTE [R].

ALLOWABLE DAMAGE FOR UPPER AND LOWER SPOILER ALUMINUM HONEYCOMB SKIN PANELS
TABLE I [A]

NOTES

- THE ALLOWABLE DAMAGE LIMITS GIVEN IN THIS FIGURE WILL NOT HAVE AN EFFECT ON A STRUCTURALLY SIGNIFICANT ITEM (SSI) GIVEN IN SRM 51-00-4, FIG. 3. THUS, NO CHANGE TO THE SUPPLEMENTAL STRUCTURAL INSPECTION DOCUMENT (SSID) INSPECTION PROGRAM IS NECESSARY.
- THESE ALLOWABLE DAMAGE LIMITS ARE FOR AIRPLANES WITH ALUMINUM HONEYCOMB SPOILERS. FOR AIRPLANES WITH GRAPHITE HONEYCOMB SPOILERS, REFER TO FIG. 12.
- THESE ALLOWABLE DAMAGE LIMITS ARE FAA APPROVED CONTINGENT ON ACCOMPLISHMENT OF THE INSPECTIONS AT THE INTERVALS CONTAINED HEREIN.
- REFER TO SRM 51-10 FOR THE INVESTIGATION AND CLEANUP OF DAMAGE.
- REFER TO SRM 51-10-2 TO APPLY ALODINE TO THE REWORKED ALUMINUM SURFACES.
- REFER TO AMM 51-20 TO APPLY THE FINISH TO THE REWORKED AREA.
- D = MAXIMUM DAMAGE DIMENSION.

[A] REFER TO DETAILS III AND IV FOR THE ALLOWABLE DAMAGE LIMITS RELATED TO TABLE I.

[B] NICKS, GOUGES, AND SCRATCHES WHICH DO NOT GO COMPLETELY THROUGH THE CLAD SURFACES MAY BE IGNORED.

[C] IF DELAMINATION IS FOUND AT A DENT LOCATION, TREAT THE DAMAGE AS A DELAMINATION.

[D] DENTS ARE NOT PERMITTED WHERE THE PANEL IS ATTACHED TO THE SPOILER STRUCTURE.

[E] THESE RESTRICTIONS ARE APPLICABLE TO THOSE AREAS CONTAINED WITHIN A BOUNDARY OF A 2-INCH STRIP ALONG THE PANEL EDGES, THE TRAILING EDGE AND AFT OF THE SPAR, AND ALSO TO THE FORWARD EDGE OF THE PANEL BONDED TO THE SPAR.

Spoiler Skin Allowable Damage - Aluminum Honeycomb Spoilers
Figure 5 (Sheet 3)

BOEING PROPRIETARY - Copyright © - Unpublished Work - See title page for details.

NOTES (CONTINUED)

[F] THE MAXIMUM DIMENSIONS MAY BE ORIENTED IN ANY DIRECTION AND MAY BE IN ANY SHAPE. THE EDGE OF THE DAMAGE MUST BE MORE THAN ONE-HALF THE MAXIMUM DAMAGE DIMENSION FROM THE EDGE OF ANY OTHER DAMAGE. CIRCULAR BOUNDARIES ARE SHOWN IN DETAILS III AND IV TO INDICATE THE MAXIMUM DIMENSIONS OF THE DAMAGE.

[G] THE DISTANCE BETWEEN ADJACENT UNFILLED SURFACE DENTS MUST BE MORE THAN ONE-HALF THE MAXIMUM DIMENSION OF THE LARGER DENTED AREA.

[H] MAKE A CHECK FOR DELAMINATION AROUND ALL DAMAGE FOUND ALONG PANEL EDGES, NEAR FITTINGS, AROUND POTTED AREAS, AND AROUND ATTACHMENT POINTS TO THE SPOILER STRUCTURE.

[I] DENTS ARE PERMITTED AS SHOWN IN DETAIL IX. DENTS THAT ARE MORE THAN THE LIMITS SHOWN IN DETAIL IX MUST BE REPAIRED. DENTS THAT ARE NOT MORE THAN THESE LIMITS BUT HAVE ONE OR MORE OF THE CONDITIONS WHICH FOLLOW, MUST BE FILLED, REWORKED, OR REPAIRED. REFER TO SRM 51-40-1.

(1) THE DISTANCE BETWEEN UNFILLED DENTS OR BETWEEN AN UNFILLED DENT AND ANY OTHER TYPE OF DAMAGE IS LESS THAN ONE HALF OF THE MAXIMUM DIMENSION OF THE LARGER DAMAGE AREA.

(2) THE DEPTH OF THE UNFILLED DENT (Y) IS MORE THAN 0.10 INCH.

[J] SCRATCHES MAY BE ORIENTED IN ANY DIRECTION. SCRATCHES WITHIN THE LIMITS DO NOT REQUIRE REWORK IF NO TWO SCRATCHES INTERSECT AND IF NO SCRATCH IS WITHIN 1.50 INCH OF AN EDGE, FITTING, POTTED AREA, OR ATTACHMENT POINTS TO THE SPOILER STRUCTURE. CLEAN UP ALL OTHER DAMAGE AS SHOWN IN DETAIL VI.

[K] CLEAN UP CRACKS AT OR NEAR EDGES AS SHOWN IN DETAILS X AND XI. [W] FOR OTHER CRACKS:

- STOP DRILL THE CRACKS. REFER TO SRM 51-10-1
- DO THE PROCEDURES IN [L].

REPAIR THE DAMAGE NO MORE THAN 150 FLIGHT HOURS AFTER THE CRACKS ARE STOP DRILLED.

[L] CLEAN THE DAMAGED AREA. SEAL THE DAMAGED AREA WITH ALUMINUM FOIL TAPE (SPEED TAPE) 3M-Y436 OR AN EQUIVALENT. DO NOT USE SPEED TAPE 2 INCHES AFT OF THE SPAR.

KEEP A RECORD OF THE LOCATION WHERE THE SPEED TAPE IS INSTALLED. REMOVE THE SPEED TAPE TO MAKE AN INSPECTION OF THE LOCATION EACH 150 FLIGHT HOURS AFTER THE TAPE IS APPLIED. REPLACE THE TAPE IF IT STARTS TO COME OFF OR DETERIORATION IS FOUND. IF THE DAMAGE BECOMES LARGER IN LESS THAN 150 FLIGHT HOURS, REPAIR THE DAMAGE NO MORE THAN FIVE FLIGHTS AFTER THAT.

[M] AS AN INTERIM MEASURE, CLEAN UP HOLES AND PUNCTURES NEAR EDGES AS SHOWN IN DETAILS X AND XI. MAKE A PERMANENT REPAIR WITHIN THE NEXT 150 FLIGHT HOURS.

[N] CLEAN UP DAMAGE AS SHOWN IN DETAILS X AND XI. MAKE A PERMANENT REPAIR WITHIN THE NEXT 150 FLIGHT HOURS.

[O] CONTACT THE BOEING COMPANY FOR REPAIR.

[P] MINIMUM DISTANCE BETWEEN ANY DAMAGED AREAS.

[Q] STOP DRILL THE ENDS OF THE CRACK AND PROTECT THE DAMAGE AS DESCRIBED IN [L]. REFER TO SRM 51-10-1.

[R] AS AN INTERIM MEASURE, TRIM THE FACE SKIN AROUND THE HOLES AND PUNCTURES TO A SMOOTH CIRCULAR OR OVAL SHAPE AND TREAT AS DESCRIBED IN [L].

[S] USE THE MANUFACTURER'S INSTRUCTIONS TO MIX, APPLY AND CURE THE POTTING COMPOUND.

[T] 25% OF THE CHORD, TO 15 SQ IN. MAX DELAMINATIONS AND SCRATCHES (SEE DETAIL VI). MAKE THE SHAPE OF THE CLEANUP AS NECESSARY TO FULLY CONTAIN THE DAMAGE.

[U] DO THE STEPS WHICH FOLLOW TO PROTECT THE DAMAGE FROM THE ENTRANCE OF WATER, SUNLIGHT OR ANY OTHER UNWANTED MATERIAL:

- SEAL THE DAMAGE LOCATION WITH ALUMINUM FOIL TAPE 3M-Y436 OR EQUIVALENT
- MAKE A RECORD OF THE LOCATION OF THE DAMAGE AND INSPECT THE DAMAGE AT EVERY AIRPLANE "A" CHECK
- REPLACE THE ALUMINUM FOIL TAPE IF THERE IS ANY PEELING OR DETERIORATION
- REPAIR THE DAMAGE WITHIN THE NEXT 150 FLIGHT HOURS.

[V] CLEAN UP THE DAMAGE AS SHOWN IN DETAILS X AND XI. [L] [W]

[W] CRACKS AND DELAMINATIONS ON THE EDGE ARE PERMITTED UP TO A LENGTH OF 2.0 INCHES AND A DEPTH OF 1.5 INCHES.

CRACKS AND DELAMINATIONS ON THE EDGE CAN BE SEALED AS FOLLOWS:

- APPLY ONE LAYER OF SPEED TAPE WHICH EXTENDS OUT 2 INCHES ALL AROUND THE DAMAGE
- APPLY A SECOND LAYER OF SPEED TAPE WHICH EXTENDS OUT 1 INCH ALL AROUND THE EDGES OF THE FIRST LAYER OF SPEED TAPE. [L]

THESE DAMAGE LOCATIONS MUST BE A MINIMUM OF 5 TIMES THE LENGTH (EDGE TO EDGE) FROM OTHER DAMAGE LOCATIONS.

Spoiler Skin Allowable Damage - Aluminum Honeycomb Spoilers
Figure 5 (Sheet 4)

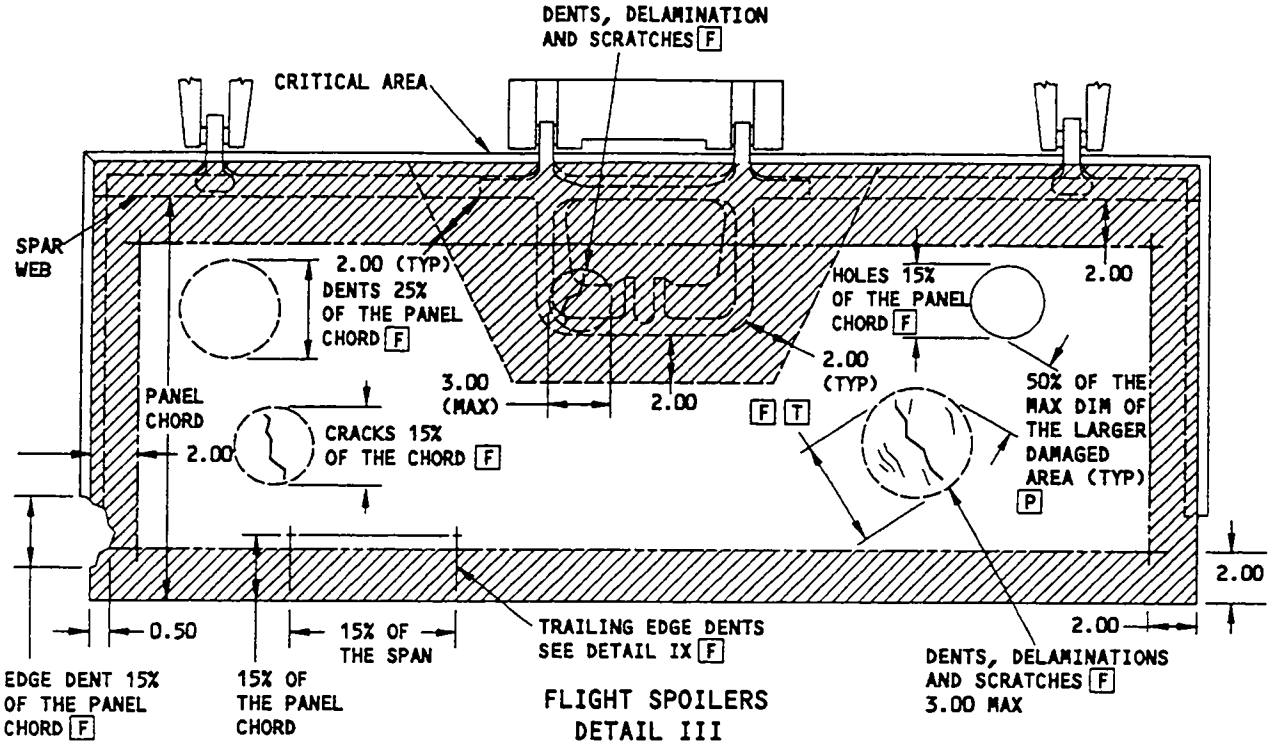

FLIGHT SPOILERS
DETAIL III

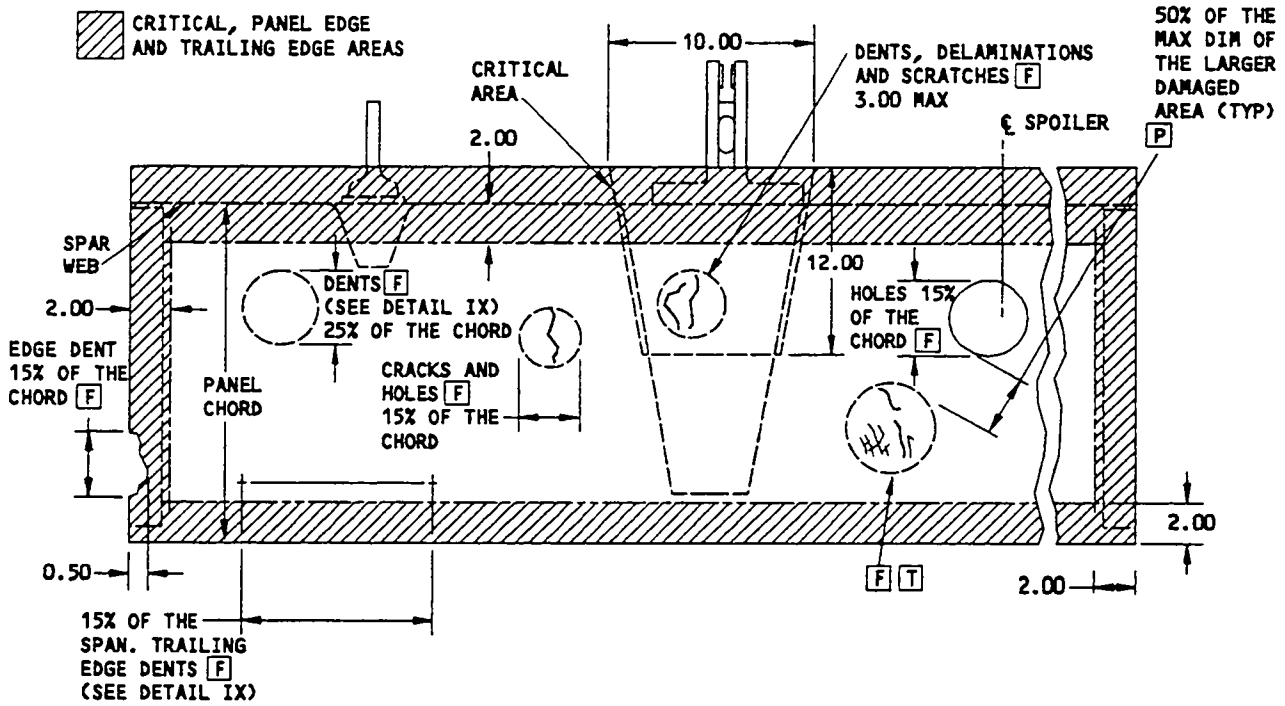

ONE-HALF OF SPOILER SHOWN
GROUND SPOILERS
DETAIL IV

Spoiler Skin Allowable Damage - Aluminum Honeycomb Spoilers
Figure 5 (Sheet 5)

E35931

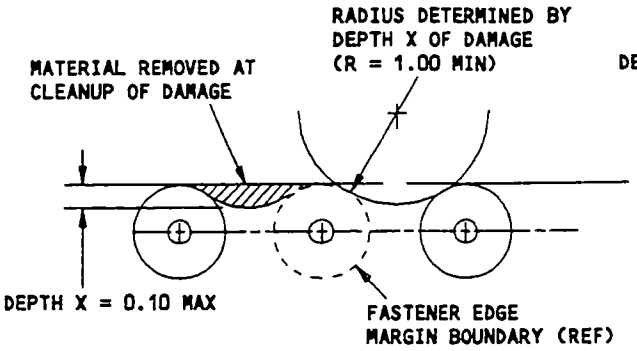

DAMAGE CLEANUP OF EDGES WHERE
FASTENER EDGE MARGINS DO NOT OVERLAP

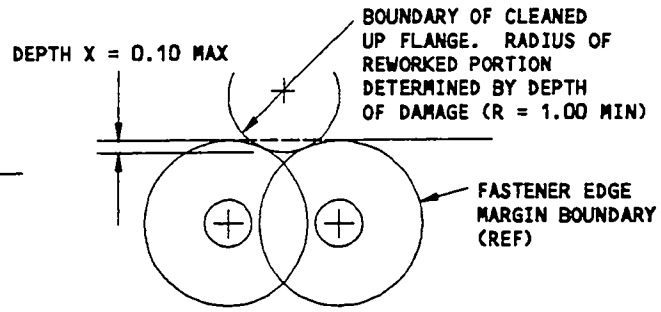

DAMAGE CLEANUP OF EDGES WHERE
FASTENER EDGE MARGINS OVERLAP

DETAIL V

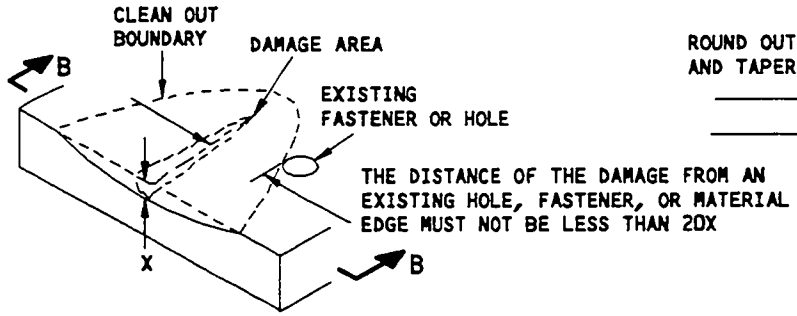

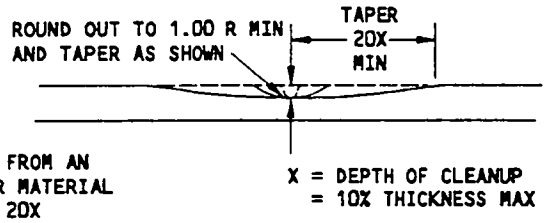

SECTION B–B

REMOVAL OF NICK, GOUGE, CORROSION, AND SCRATCH DAMAGE ON A SURFACE
DETAIL VI

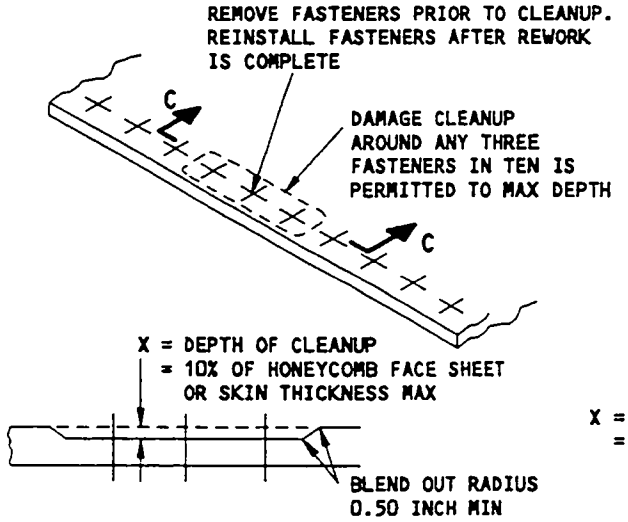

SECTION C–C

DAMAGE CLEANUP
DETAIL VII

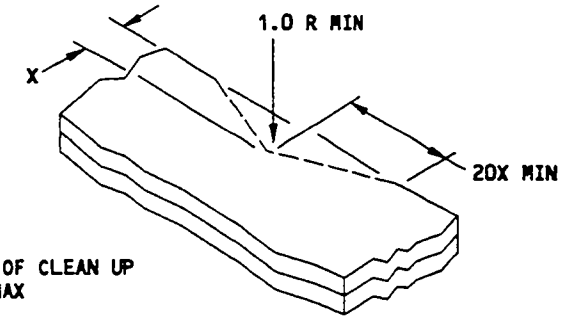

REMOVAL OF DAMAGE ON AN EDGE
DETAIL VIII

Spoiler Skin Allowable Damage - Aluminum Honeycomb Spoilers
Figure 5 (Sheet 6)

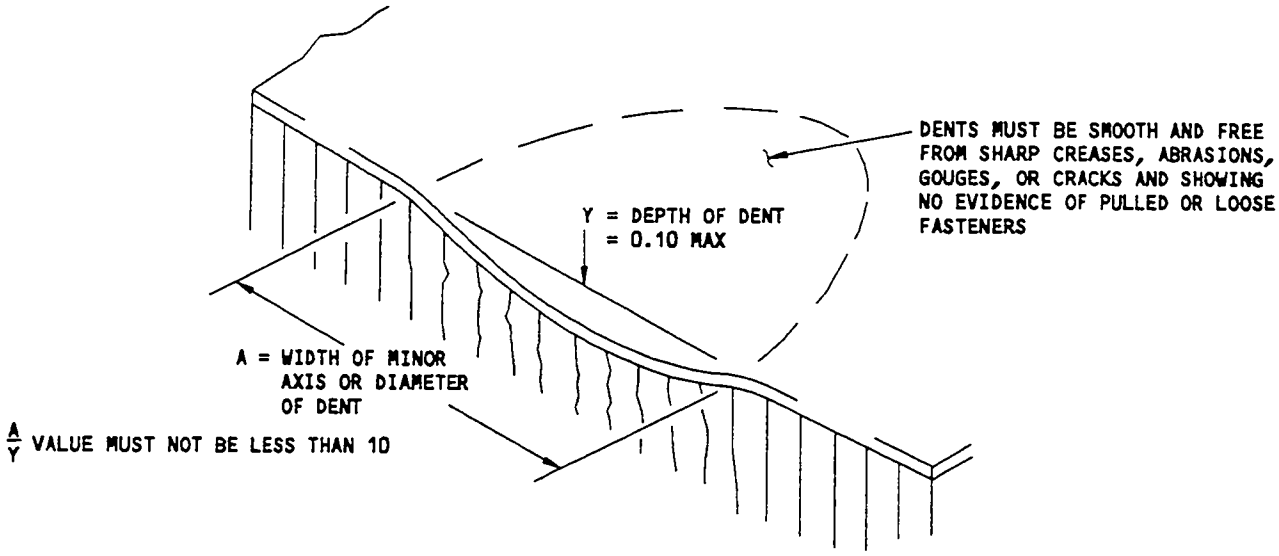

PROFILE OF PERMISSIBLE DENTS ON ALUMINUM HONEYCOMB PANELS
DETAIL IX

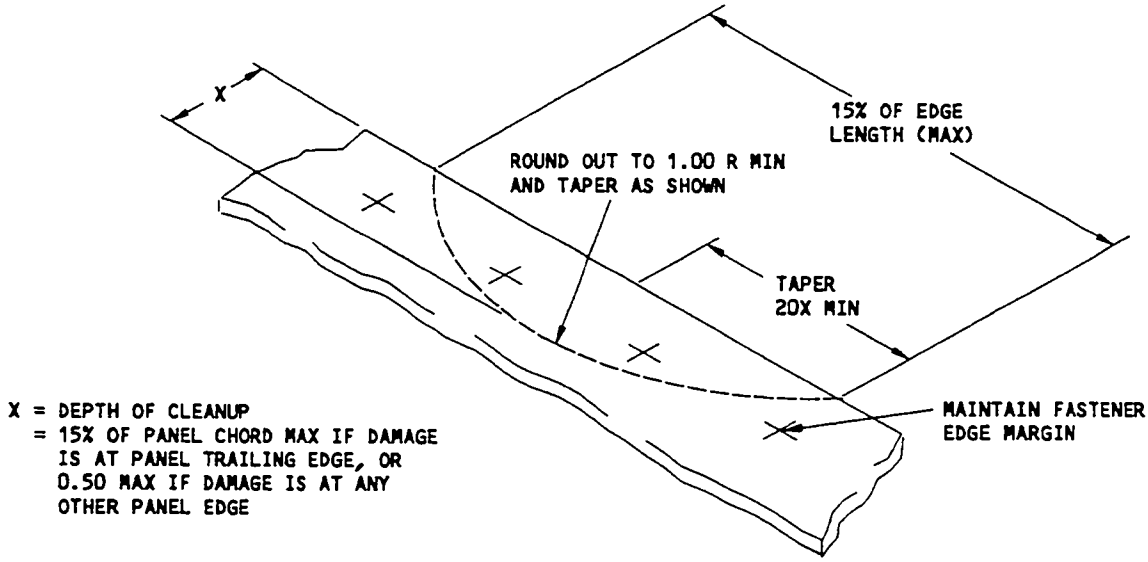

REMOVAL OF DAMAGE ON AN EDGE OF HONEYCOMB PANEL
DETAIL X

Spoiler Skin Allowable Damage - Aluminum Honeycomb Spoilers
Figure 5 (Sheet 7)

E35937

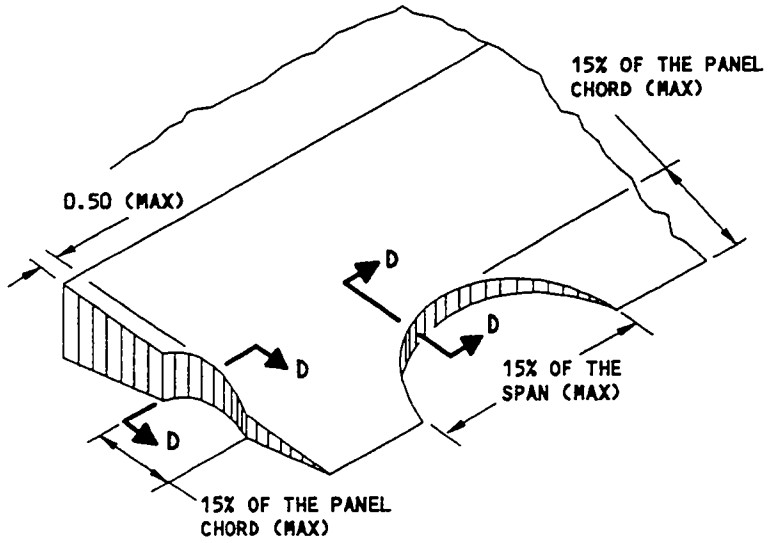

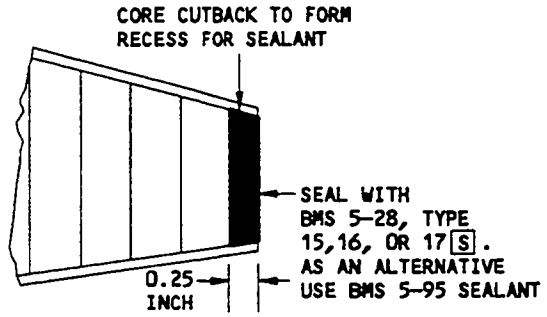

SECTION D-D

DAMAGE CLEANUP ON AN EDGE OF HONEYCOMB PANEL
DETAIL XI

Spoiler Skin Allowable Damage - Aluminum Honeycomb Spoilers
Figure 5 (Sheet 8)

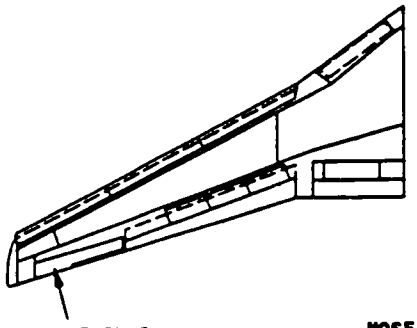

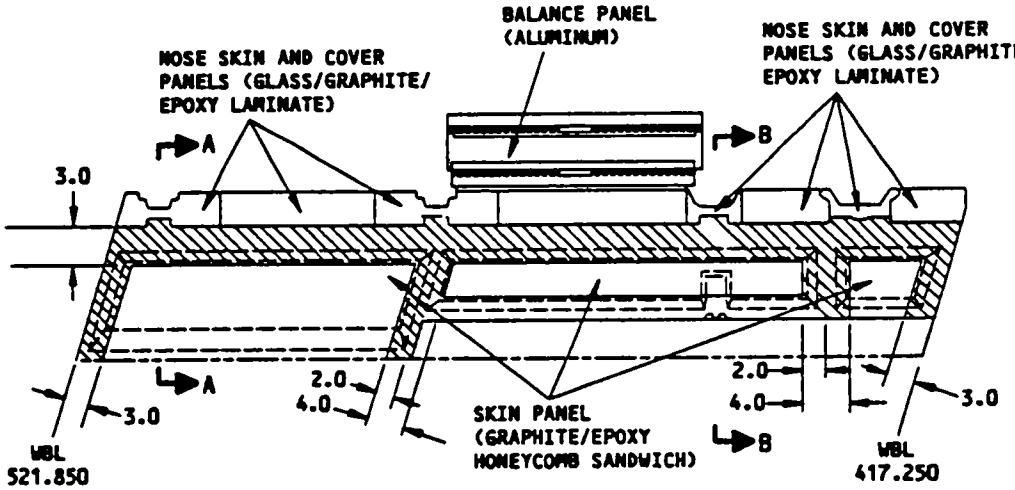

PLAN VIEW
DETAIL I

CRITICAL AREAS (SHADED)
CONTACT THE BOEING COMPANY
FOR DAMAGE ALLOWANCE

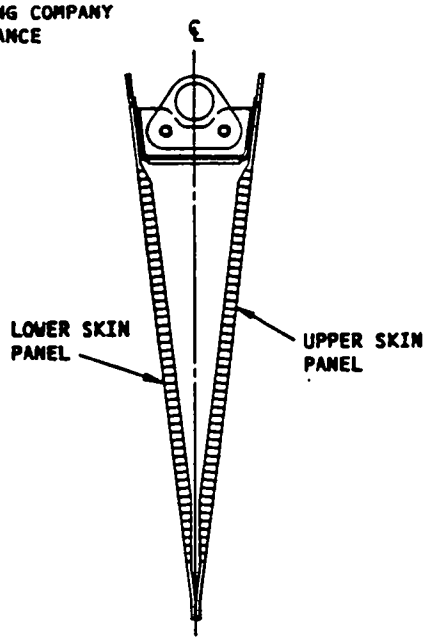

SECTION A-A

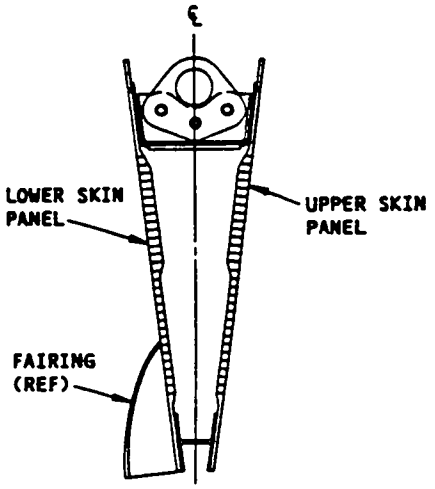

SECTION B-B

Aileron Skin Allowable Damage (Graphite Composite Aileron)
Figure 6 (Sheet 1)

141528

DESCRIPTION	CRACKS	NICKS, GOUGES, SCRATCHES AND CORROSION	DENTS	HOLES AND PUNCTURES	DELAMINATION
SKIN PANELS	B	E	G	I	K
NOSE SKIN AND COVER PANELS	C	E	L	I	K
BALANCE PANELS	D	F	H	J	——

ALLOWABLE DAMAGE FOR DETAIL I
TABLE I

NOTES

- THE ALLOWABLE DAMAGE LIMITS GIVEN IN THIS FIGURE WILL NOT HAVE AN EFFECT ON A STRUCTURALLY SIGNIFICANT ITEM (SSI) GIVEN IN SRM 51-00-4, FIG. 3. THUS, NO CHANGE TO THE SUPPLEMENTAL STRUCTURAL INSPECTION DOCUMENT (SSID) INSPECTION PROGRAM IS NECESSARY.
- FOR INVESTIGATION AND CLEANUP OF DAMAGE, REFER TO SRM 51-10.
- REFER TO SRM 51-70 FOR AERODYNAMIC SMOOTHNESS REQUIREMENTS. WHERE THE DAMAGE EXCEEDS THE LIMITS SHOWN IN SRM 51-70, CONSIDERATION SHOULD BE GIVEN TO THE LOSS OF PERFORMANCE INVOLVED.
- FOR REWORKED ALUMINUM AREAS APPLY A CHEMICAL CONVERSION COATING AS GIVEN IN SRM 51-10-2.
- REFINISH REWORKED AREAS AS GIVEN IN AMM 51-20.
- D = MAXIMUM DAMAGE DIMENSION.
- TYPICAL DAMAGE TO A PANEL EDGEBAND OR LAMINATE EDGE MAY CONSIST OF EDGE CRUSHING, CRACKS OR DELAMINATION. DAMAGE AROUND HOLES MAY CONSIST OF OVALIZATION, FASTENER PULL-THROUGH OR CRACKS OUT OF HOLE. DAMAGE MAY REDUCE THE EFFECTIVE CROSS SECTIONAL AREA OF AN EDGE OR EDGEBAND. DAMAGE TO EDGES SHOULD BE BLENDED OUT TO LIMITATIONS GIVEN FOR COMPONENT.

A IT IS RECOMMENDED TO REMOVE MOISTURE FROM THE DAMAGED AREA. USE VACUUM AND HEAT (A MAXIMUM OF 150°F ([66°C]) TO REMOVE THAT MOISTURE.

CLEAN THE DAMAGED AREA. SEAL THE DAMAGED AREA WITH ALUMINUM FOIL TAPE (SPEED TAPE) 3M-Y436 OR AN EQUIVALENT. KEEP THE QUANTITY OF SPEED TAPE USED TO A MINIMUM. THE AMOUNT OF SPEED TAPE USED CAN CHANGE THE BALANCE MOMENT OF THE AILERON. IF NECESSARY, BALANCE THE AILERON. REFER TO SRM 51-81-1 AND 51-81-2. KEEP A RECORD OF THE LOCATION WHERE THE SPEED TAPE IS INSTALLED. MAKE AN INSPECTION OF THAT LOCATION NO MORE THAN 65 FLIGHT HOURS AFTER THE TAPE IS APPLIED. REPLACE THE TAPE IF IT STARTS TO COME OFF OR DETERIORATION IS FOUND. REPAIR THE DAMAGE NO MORE THAN 60 CALENDAR DAYS AFTER THE TAPE IS APPLIED. IF THE DAMAGE BECOMES LARGER IN LESS THAN 60 CALENDAR DAYS, REPAIR THE DAMAGE NO MORE THAN FIVE FLIGHT HOURS AFTER THAT.

B EDGE CRACKS MUST BE REMOVED PER DETAILS II AND VI. 0.50 INCH MAX LENGTH IN HONEYCOMB AREA IS ALLOWED PROVIDED DAMAGE IS A MINIMUM OF 6.0 INCHES FROM ANY OTHER DAMAGE, HOLES, OR PART EDGE A M.

C EDGE CRACKS MUST BE REMOVED PER DETAILS II AND VI. 0.50 MAX LENGTH OF DAMAGE IS 6.0 INCHES FROM ANY OTHER DAMAGE AND 2.0 INCHES FROM ANY HOLE OR PART EDGE A.

D CRACKS NOT ALLOWED EXCEPT FOR EDGE CRACKS WHICH MUST BE REMOVED PER DETAIL II OR VI.

E IF FIBERS ARE DAMAGED TREAT AS A CRACK. IF FIBERS ARE NOT DAMAGED PROTECT PER NOTE A.

F NICKS, GOUGES, SCRATCHES, AND CORROSION REMOVED PER DETAILS II,III,V, AND VI ARE ALLOWED PROVIDED THE MAXIMUM PERMISSIBLE DEPTH OF DAMAGE IS NOT EXCEEDED. NICKS, GOUGES AND SCRATCHES THAT DO NOT PENETRATE ALL THE WAY THRU CLAD SURFACES MAY BE IGNORED.

G DENTS GENERALLY RESULT IN FIBER DAMAGE OR DELAMINATION WHICH MAY NOT BE APPARENT USING VISUAL OR TAP TESTING METHODS OF DETECTION. DENTS UP TO 0.5 INCH DIAMETER MAXIMUM (D) ARE ALLOWED BUT MUST BE A MINIMUM OF 6.0 INCHES (EDGE TO EDGE) FROM ANY OTHER DAMAGE, FASTENER HOLE OR PART EDGE. TREAT PER NOTE A. IF FIBER DAMAGE OR DELAMINATION IS DETECTED, REFER TO APPLICABLE DAMAGE DATA IN TABLE I. SEE A

H FOR DENTS SEE DETAIL IV.

I 0.50 INCH MAX DIA ALLOWED PROVIDED DAMAGE IS MIN OF 6D FROM OTHER DAMAGE, NEAREST HOLE, OR MATERIAL EDGE. DO NOT CLEAN UP DAMAGE EXCEPT TO REMOVE RESIN BURRS EXTENDING INTO SURFACE CONTOUR A.

Aileron Skin Allowable Damage (Graphite Composite Aileron)
Figure 6 (Sheet 2)

BOEING PROPRIETARY - Copyright © - Unpublished Work - See title page for details.

NOTES (CONTINUED)

[J] CLEAN PUNCTURE OUT UP TO 0.25 MAX DIA HOLE AND NOT CLOSER THAN 1.0 INCH TO FASTENER HOLE, EDGE OF PART, OR OTHER DAMAGE. ONE HOLE PER 7.0 SQUARE INCHES OF PANEL ALLOWED. FILL HOLE WITH A 2117-T3 OR T4 ALUMINUM RIVET INSTALLED WET WITH BMS 5-95 SEALANT. ALL OTHER HOLES TO BE REPAIRED

[K] 0.50 MAX DIA IS ALLOWED PER SQUARE FOOT OF AREA AND A MINIMUM OF 6.0 INCHES FROM ANY OTHER DAMAGE AND 1.0 INCH MINIMUM FROM ANY HOLE OR EDGE. A MAXIMUM OF 0.10 INCH DELAMINATION FROM EDGE IS ALLOWED [A] [M]

[L] DENTS GENERALLY RESULT IN FIBER DAMAGE OR DELAMINATION WHICH MAY NOT BE APPARENT USING VISUAL OR TAP TESTING METHODS OF DETECTION. DENTS UP TO 0.5 INCH DIAMETER MAXIMUM (D) ARE ALLOWED BUT MUST BE A MINIMUM OF 6.0 INCHES (EDGE TO EDGE) FROM ANY OTHER DAMAGE AND 2.0 INCHES MINIMUM FROM ANY FASTENER, HOLE OR PART EDGE. TREAT PER NOTE [A]. IF FIBER DAMAGE OR DELAMINATION IS DETECTED REFER TO APPLICABLE DAMAGE DATA IN TABLE I. SEE [A]

[M] CRACKS AND DELAMINATIONS ON THE EDGE TO A MAXIMUM LENGTH OF 2 INCHES AND A DEPTH OF 0.5 INCH CAN BE SEALED AS FOLLOWS:

- APPLY ONE LAYER OF SPEED TAPE WHICH EXTENDS OUT 2 INCHES ALL AROUND THE DAMAGE
- APPLY A SECOND LAYER OF SPEED TAPE WHICH EXTENDS OUT 1 INCH ALL AROUND THE EDGES OF THE FIRST LAYER OF SPEED TAPE.

THESE DAMAGE LOCATIONS MUST BE A MINIMUM OF 10 TIMES THE DAMAGE LENGTH (EDGE TO EDGE) FROM OTHER DAMAGE LOCATIONS.

Aileron Skin Allowable Damage (Graphite Composite Aileron)
Figure 6 (Sheet 3)

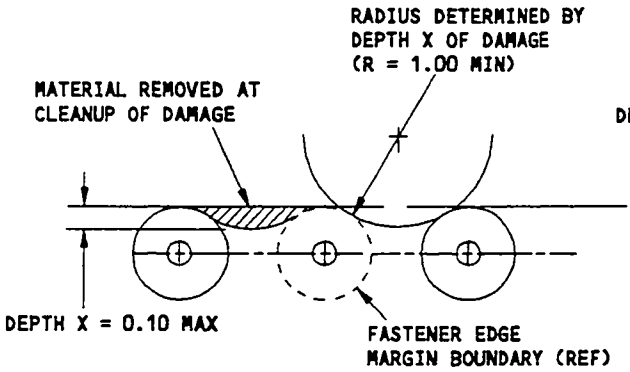

DAMAGE CLEANUP OF EDGES WHERE
FASTENER EDGE MARGINS DO NOT OVERLAP

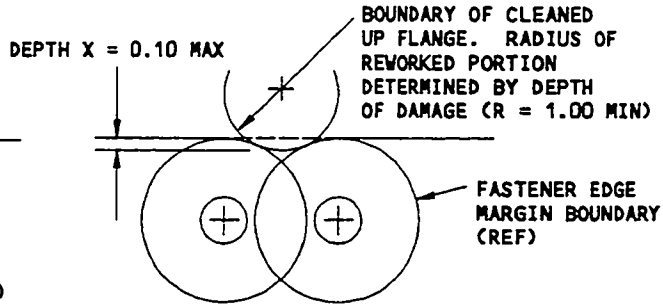

DAMAGE CLEANUP OF EDGES WHERE
FASTENER EDGE MARGINS OVERLAP

DETAIL II

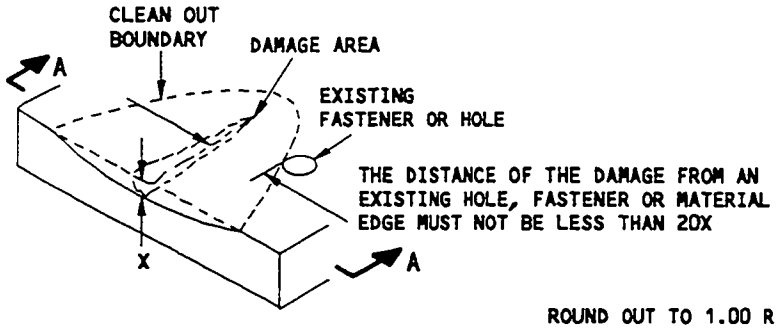

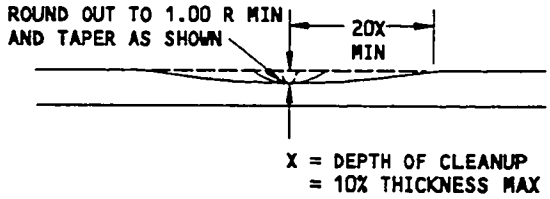

SECTION A-A

REMOVAL OF NICK, GOUGE, SCRATCH, AND CORROSION DAMAGE ON A SURFACE

DETAIL III

Aileron Skin Allowable Damage (Graphite Composite Aileron)
Figure 6 (Sheet 4)

141530

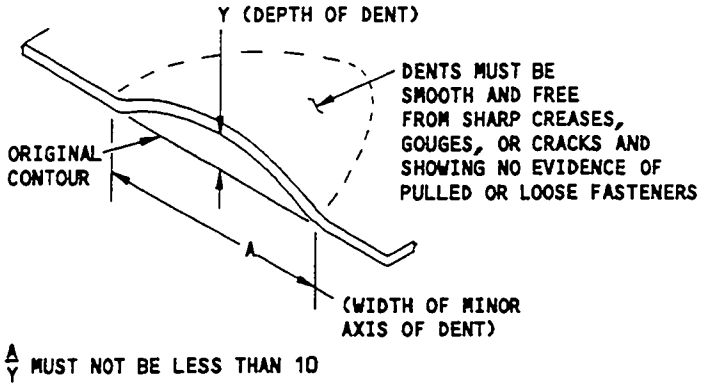

ALLOWABLE DAMAGE FOR DENT

DETAIL IV

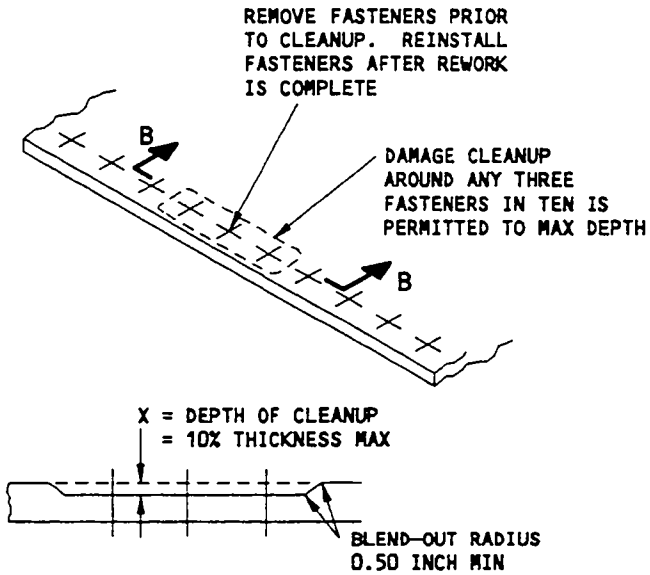

SECTION B–B

DAMAGE CLEANUP

DETAIL V

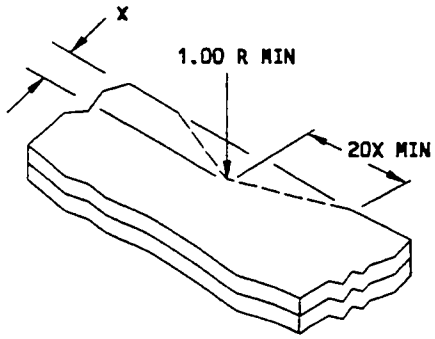

X = DEPTH OF CLEANUP = 0.10 MAX

REMOVAL OF DAMAGE ON AN EDGE

DETAIL VI

Aileron Skin Allowable Damage (Graphite Composite Aileron)
Figure 6 (Sheet 5)

141538

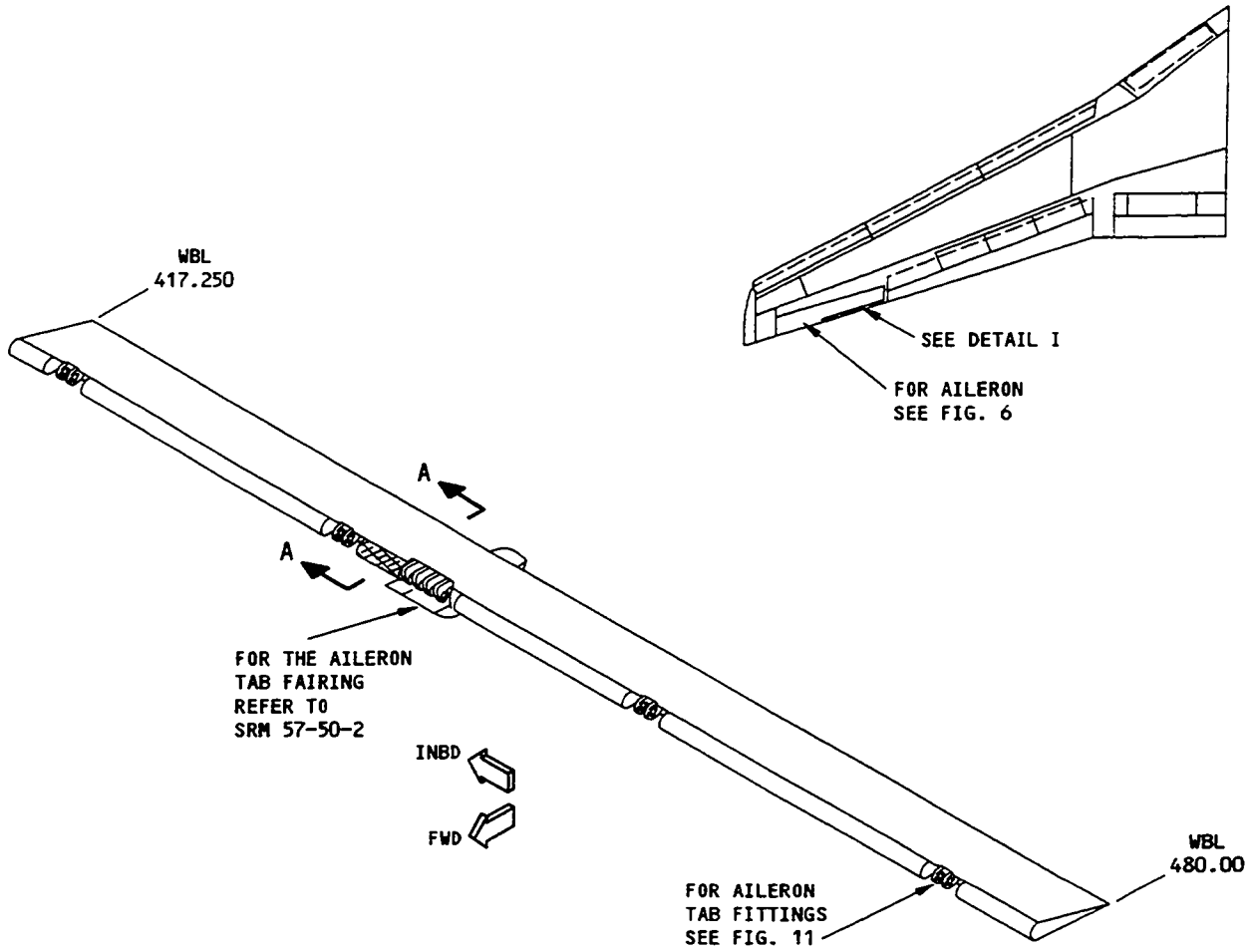

DETAIL I

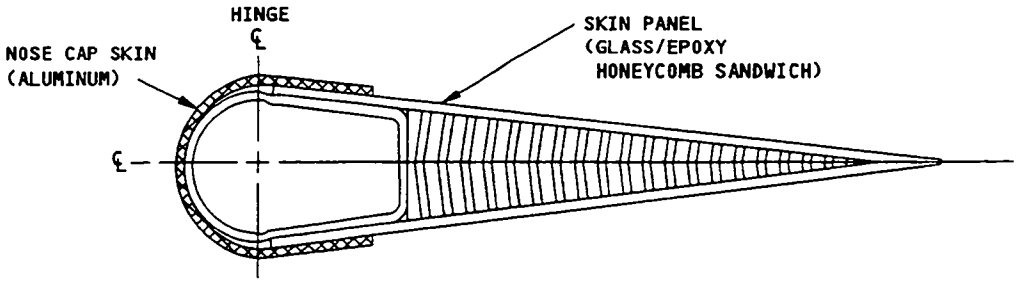

SECTION A-A

Aileron Tab Skin Allowable Damage (Graphite Composite Aileron)
Figure 7 (Sheet 1)

DESCRIPTION	CRACKS	NICKS, GOUGES, SCRATCHES AND CORROSION	DENTS	HOLES AND PUNCTURES	DELAMINATION
SKIN PANEL	B	D	F	H	J
NOSE CAP SKIN	C	E	G	I	———

ALLOWABLE DAMAGE FOR DETAIL I

NOTES

- THE ALLOWABLE DAMAGE LIMITS GIVEN IN THIS FIGURE WILL NOT HAVE AN EFFECT ON A STRUCTURALLY SIGNIFICANT ITEM (SSI) GIVEN IN SRM 51-00-4, FIG. 3. THUS, NO CHANGE TO THE SUPPLEMENTAL STRUCTURAL INSPECTION DOCUMENT (SSID) INSPECTION PROGRAM IS NECESSARY.
- FOR INVESTIGATION AND CLEANUP OF DAMAGE, REFER TO SRM 51-10.
- REFER TO SRM 51-70 FOR AERODYNAMIC SMOOTHNESS REQUIREMENTS. WHERE THE DAMAGE EXCEEDS THE LIMITS SHOWN IN SRM 51-70, CONSIDERATION SHOULD BE GIVEN TO THE LOSS OF PERFORMANCE INVOLVED.
- FOR REWORKED ALUMINUM AREAS APPLY A CHEMICAL CONVERSION COATING AS GIVEN IN SRM 51-10-2.
- REFINISH REWORKED AREAS AS GIVEN IN AMM 51-20.
- D = MAXIMUM DAMAGE DIMENSION
- TYPICAL DAMAGE TO A PANEL EDGEBAND MAY CONSIST OF EDGE CRUSHING, CRACKS OR DELAMINATION. DAMAGE AROUND HOLES MAY CONSIST OF OVALIZATION, FASTENER PULL-THROUGH OR CRACKS OUT OF HOLE. DAMAGE MAY REDUCE THE EFFECTIVE CROSS SECTIONAL AREA OF AN EDGE OR EDGEBAND. DAMAGE TO EDGES SHOULD BE BLENDED OUT TO LIMITATIONS GIVEN FOR COMPONENT.

A IT IS RECOMMENDED TO REMOVE MOISTURE FROM THE DAMAGED AREA. USE VACUUM AND HEAT (A MAXIMUM OF 150°F ([66°C]) TO REMOVE THAT MOISTURE.

CLEAN THE DAMAGED AREA. SEAL THE DAMAGED AREA WITH ALUMINUM FOIL TAPE (SPEED TAPE) 3M-Y436 OR AN EQUIVALENT. KEEP THE QUANTITY OF SPEED TAPE USED TO A MINIMUM. THE AMOUNT OF SPEED TAPE USED CAN CHANGE THE BALANCE MOMENT OF THE AILERON TAB. IF NECESSARY, BALANCE THE AILERON TAB. REFER TO SRM 51-80-3. KEEP A RECORD OF THE LOCATION WHERE THE SPEED TAPE IS INSTALLED. MAKE AN INSPECTION OF THAT LOCATION NO MORE THAN 65 FLIGHT HOURS AFTER THE TAPE IS APPLIED. REPLACE THE TAPE IF IT STARTS TO COME OFF OR DETERIORATION IS FOUND. REPAIR THE DAMAGE NO MORE THAN 60 CALENDAR DAYS AFTER THE TAPE IS APPLIED. IF THE DAMAGE BECOMES LARGER IN LESS THAN 60 CALENDAR DAYS, REPAIR THE DAMAGE NO MORE THAN FIVE FLIGHTS AFTER THAT.

B EDGE CRACKS MUST BE REMOVED PER DETAILS II AND VI. 0.50 INCH MAX LENGTH IS ALLOWED PROVIDED DAMAGE IS A MINIMUM OF 6.0 INCHES FROM ANY OTHER DAMAGE AND 3.0 INCHES FROM ANY HOLE OR PART EDGE A K.

C CRACKS NOT ALLOWED EXCEPT FOR EDGE CRACKS WHICH MUST BE REMOVED PER DETAIL II OR VI.

D CLEAN UP CRACKS AT OR NEAR EDGES AS SHOWN IN DETAILS II AND VI. FOR OTHER CRACKS:

- STOP DRILL THE CRACKS. REFER TO SRM 51-10-1
- DO THE PROCEDURES IN A K.

E NICKS, GOUGES, SCRATCHES, AND CORROSION REMOVED PER DETAILS II,III,V, AND VI ARE ALLOWED PROVIDED THE MAXIMUM PERMISSIBLE DEPTH OF DAMAGE IS NOT EXCEEDED. NICKS, GOUGES AND SCRATCHES THAT DO NOT PENETRATE ALL THE WAY THRU CLAD SURFACES MAY BE IGNORED.

F DENTS GENERALLY RESULT IN FIBER DAMAGE OR DELAMINATION WHICH MAY NOT BE APPARENT USING VISUAL OR TAP TESTING METHODS OF DETECTION. DENTS UP TO 0.5 INCH DIAMETER MAXIMUM (D) ARE ALLOWED BUT MUST BE A MINIMUM OF 6.0 INCHES (EDGE TO EDGE) FROM ANY OTHER DAMAGE, AND 3.0 INCHES FROM ANY FASTENER HOLE OR PART EDGE. TREAT PER NOTE A . IF FIBER DAMAGE OR DELAMINATION IS DETECTED REFER TO APPLICABLE DAMAGE DATA IN TABLE A.

G DENTS ALLOWED PER DETAIL IV.

H 0.50 INCH MAX DIA ALLOWED PROVIDED DAMAGE IS MIN OF 6.0D FROM OTHER DAMAGE, NEAREST HOLE, OR MATERIAL EDGE. DO NOT CLEAN UP DAMAGE EXCEPT TO REMOVE RESIN BURRS EXTENDING INTO SURFACE CONTOUR A .

Aileron Tab Skin Allowable Damage (Graphite Composite Aileron)
Figure 7 (Sheet 2)

BOEING PROPRIETARY - Copyright © - Unpublished Work - See title page for details.

NOTES (Continued)

[I] CLEAN PUNCTURE OUT UP TO 0.25 MAX DIA HOLE AND NOT CLOSER THAN 1.0 INCH TO FASTENER HOLE, EDGE OF PART, OR OTHER DAMAGE. ONE HOLE PER 7.0 SQUARE INCHES OF PANEL ALLOWED. FILL HOLE WITH A 2117-T3 OR T4 ALUMINUM RIVET INSTALLED WET WITH BMS 5-95 SEALANT. ALL OTHER HOLES TO BE REPAIRED

[J] 0.50 MAX DIA IS ALLOWED PER SQUARE FOOT OF AREA AND A MINIMUM OF 6.0 INCHES FROM ANY OTHER DAMAGE AND 1.0 INCH FROM ANY HOLE OR EDGE. A MAXIMUM OF 0.10 INCH DELAMINATION FROM EDGE IS ALLOWED [A] [K]

[K] CRACKS AND DELAMINATIONS ON THE EDGE TO A MAXIMUM LENGTH OF 2 INCHES AND A DEPTH OF 0.5 INCH CAN BE SEALED AS FOLLOWS:

- APPLY ONE LAYER OF SPEED TAPE WHICH EXTENDS OUT 2 INCHES ALL AROUND THE DAMAGE
- APPLY A SECOND LAYER OF SPEED TAPE WHICH EXTENDS OUT 1 INCH ALL AROUND THE EDGES OF THE FIRST LAYER OF SPEED TAPE. [A]

THESE DAMAGE LOCATIONS MUST BE A MINIMUM OF 10 TIMES THE DAMAGE LENGTH (EDGE TO EDGE) FROM OTHER DAMAGE LOCATIONS.

Aileron Tab Skin Allowable Damage (Graphite Composite Aileron)
Figure 7 (Sheet 3)

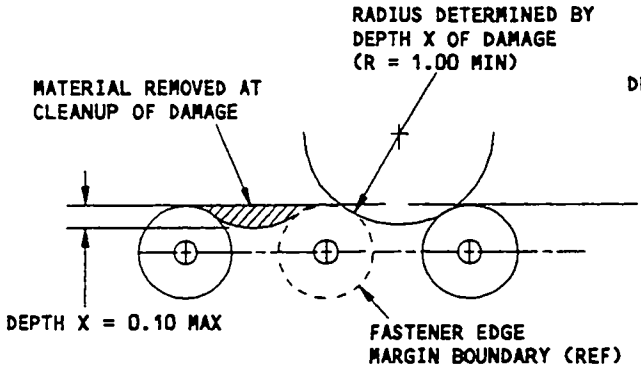

DAMAGE CLEANUP OF EDGES WHERE
FASTENER EDGE MARGINS DO NOT OVERLAP

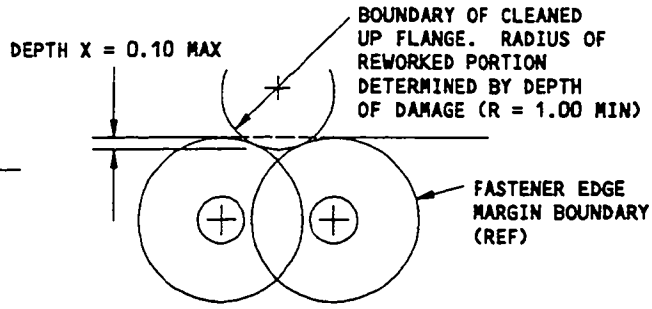

DAMAGE CLEANUP OF EDGES WHERE
FASTENER EDGE MARGINS OVERLAP

DETAIL II

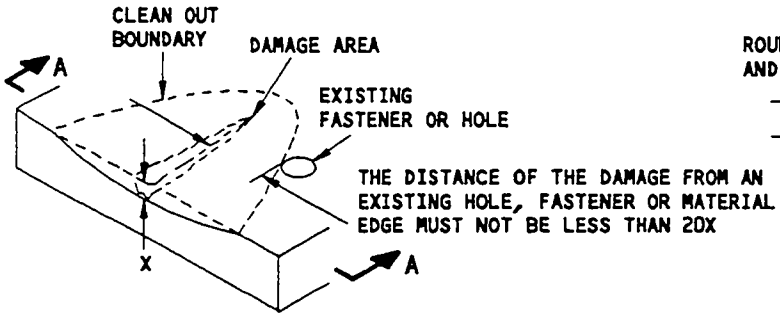

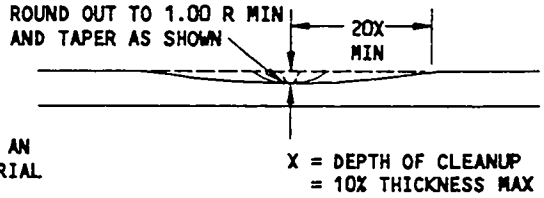

SECTION A-A

REMOVAL OF NICK, GOUGE, SCRATCH, AND CORROSION DAMAGE ON A SURFACE
DETAIL III

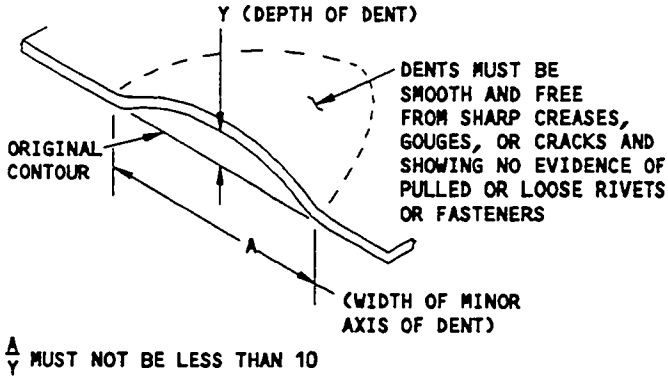

ALLOWABLE DAMAGE FOR DENT
DETAIL IV

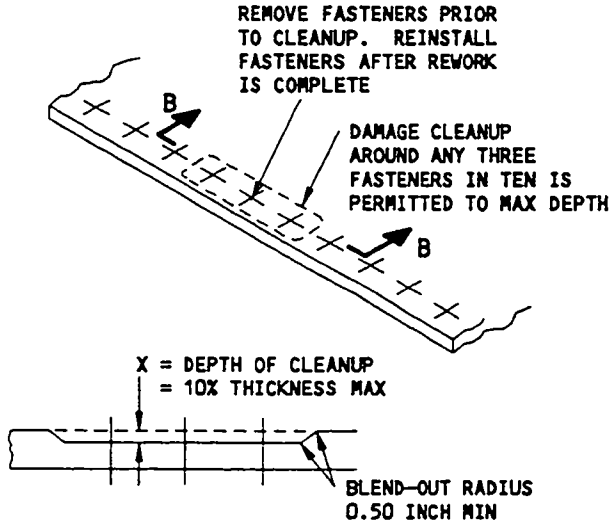

SECTION B-B
DAMAGE CLEANUP
DETAIL V

Aileron Tab Skin Allowable Damage (Graphite Composite Aileron)
Figure 7 (Sheet 4)

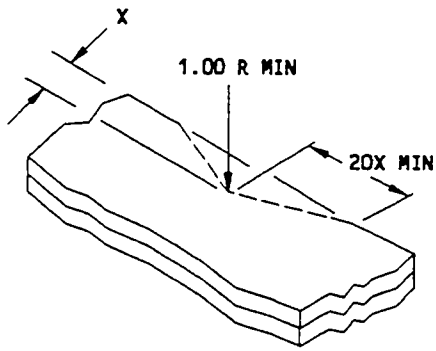

X = DEPTH OF CLEANUP = 0.10 MAX

REMOVAL OF DAMAGE ON AN EDGE

DETAIL VI

Aileron Tab Skin Allowable Damage (Graphite Composite Aileron)
Figure 7 (Sheet 5)

141553

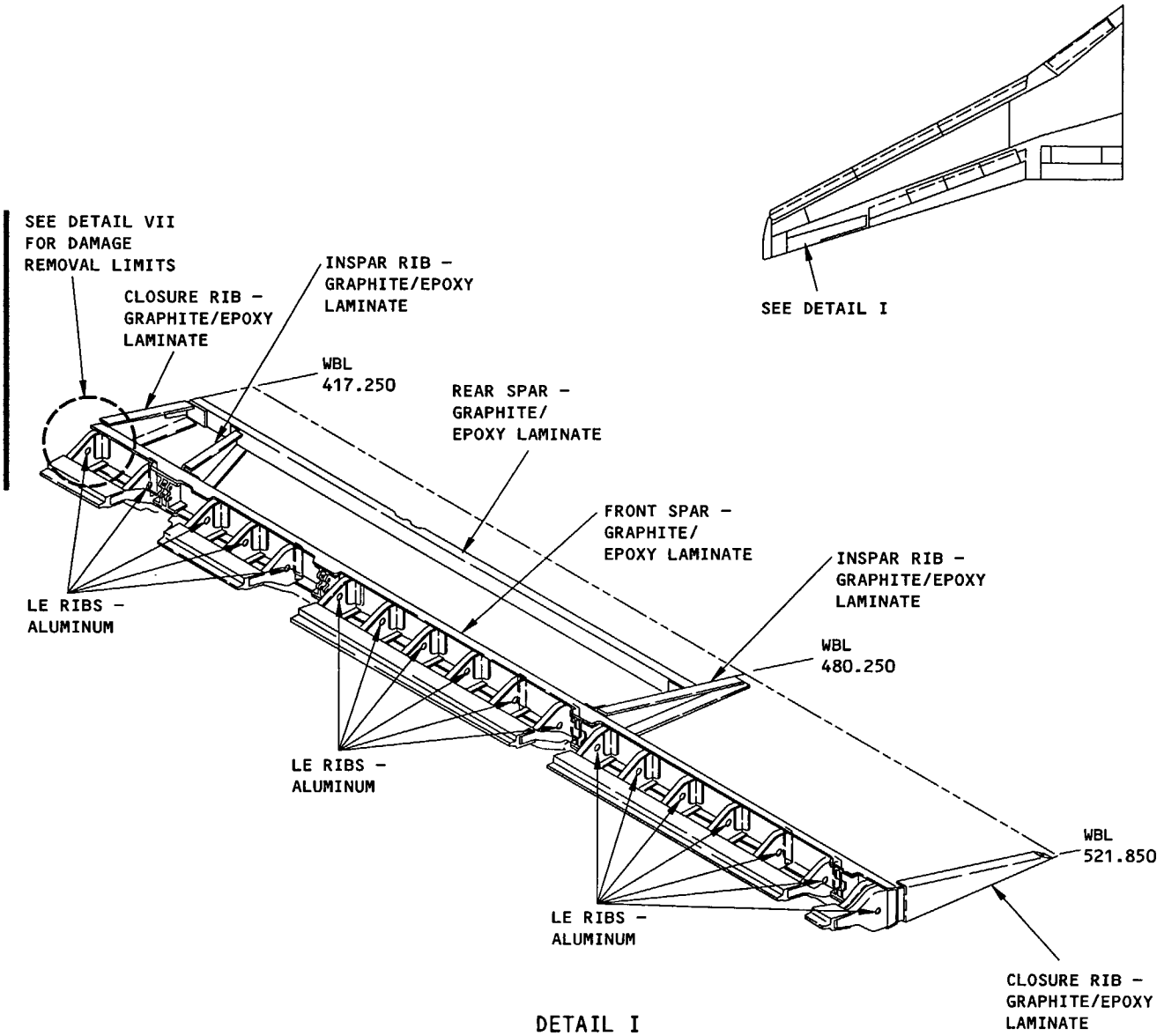

DETAIL I

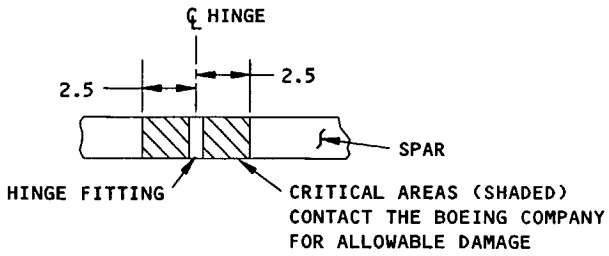

TYPICAL VIEW AT HINGE FITTING LOCATIONS

Aileron Structure Allowable Damage (Graphite Composite Aileron)
Figure 8 (Sheet 1)

BOEING PROPRIETARY - Copyright © - Unpublished Work - See title page for details.

DESCRIPTION	CRACKS	NICKS, GOUGES, SCRATCHES AND CORROSION	DENTS	HOLES AND PUNCTURES	DELAMINATION
SPARS	B	D	F	H	J
INSPAR RIBS	B	D	F	H	J
LE RIBS	C	E	G	I	—

ALLOWABLE DAMAGE FOR DETAIL I

NOTES

- THE ALLOWABLE DAMAGE LIMITS GIVEN IN THIS FIGURE WILL NOT HAVE AN EFFECT ON A STRUCTURALLY SIGNIFICANT ITEM (SSI) GIVEN IN SRM 51-00-4, FIG. 3. THUS, NO CHANGE TO THE SUPPLEMENTAL STRUCTURAL INSPECTION DOCUMENT (SSID) INSPECTION PROGRAM IS NECESSARY.
- FOR INVESTIGATION AND CLEANUP OF DAMAGE, REFER TO SRM 51-10.
- FOR REWORKED ALUMINUM AREAS APPLY A CHEMICAL CONVERSION COATING AS GIVEN IN SRM 51-10-2.
- REFINISH REWORKED AREAS AS GIVEN IN AMM 51-20.
- D = MAXIMUM DAMAGE DIMENSION.
- TYPICAL DAMAGE TO A PANEL EDGEBAND OR LAMINATE EDGE MAY CONSIST OF EDGE CRUSHING, CRACKS OR DELAMINATION. DAMAGE AROUND HOLES MAY CONSIST OF OVALIZATION, FASTENER PULL-THROUGH OR CRACKS OUT OF HOLE. DAMAGE MAY REDUCE THE EFFECTIVE CROSS SECTIONAL AREA. DAMAGE TO EDGES SHOULD BE BLENDED OUT TO LIMITATIONS GIVEN FOR COMPONENT.

A PROTECT DAMAGE FROM ENTRANCE OF WATER, SUNLIGHT OR OTHER FOREIGN MATTER BY SEALING WITH ALUMINUM FOIL TAPE (SPEED TAPE) 3M-Y436 OR EQUIVALENT. RECORD LOCATION AND REPAIR BEFORE THE EXPIRATION OF 60 CALENDAR DAYS.

B EDGE CRACKS MUST BE REMOVED PER DETAILS II AND VI. 0.50 INCH MAX LENGTH OF DAMAGE IS ALLOWED PROVIDED DAMAGE IS A MINIMUM OF 6.0 INCHES FROM ANY OTHER DAMAGE AND 3.0 INCHES MINIMUM FROM ANY HOLE OR PART EDGE A.

C CRACKS NOT ALLOWED EXCEPT FOR EDGE CRACKS WHICH MUST BE REMOVED PER DETAIL II OR VI.

D IF FIBERS ARE DAMAGED, TREAT AS A CRACK. IF FIBERS ARE NOT DAMAGED PROTECT PER NOTE A.

E NICKS, GOUGES, SCRATCHES, AND CORROSION REMOVED PER DETAILS II,III,V, AND VI ARE ALLOWED PROVIDED THE MAXIMUM PERMISSIBLE DEPTH OF DAMAGE IS NOT EXCEEDED. NICKS, GOUGES AND SCRATCHES THAT DO NOT PENETRATE ALL THE WAY THRU CLAD SURFACES MAY BE IGNORED.

F DENTS GENERALLY RESULT IN FIBER DAMAGE OR DELAMINATION WHICH MAY NOT BE APPARENT USING VISUAL OR TAP TESTING METHODS OF DETECTION. DENTS UP TO 0.5 INCH DIAMETER MAXIMUM (D) ARE ALLOWED BUT MUST BE A MINIMUM OF 6.0 INCHES (EDGE TO EDGE) FROM ANY OTHER DAMAGE AND 3.0 INCHES MINIMUM FROM ANY FASTENER HOLE OR PART EDGE. TREAT PER NOTE A. IF FIBER DAMAGE OR DELAMINATION IS DETECTED REFER TO APPLICABLE DAMAGE DATA IN TABLE A.

G DENTS ALLOWED PER DETAIL IV.

H 0.50 INCH MAX DIA ALLOWED PROVIDED DAMAGE IS MIN OF 6.0D FROM OTHER DAMAGE, NEAREST HOLE, OR MATERIAL EDGE. DO NOT CLEAN UP DAMAGE EXCEPT TO REMOVE RESIN BURRS EXTENDING INTO SURFACE CONTOUR A.

I HOLES UP TO 0.25 INCH DIA ARE ALLOWED PROVIDED THEY ARE LOCATED 4D (EDGE TO EDGE) FROM ANY OTHER HOLE, FASTENER, PART EDGE, OR OTHER DAMAGE AND ARE FILLED WITH 2117-T3 OR T4 ALUMINUM RIVETS. ALUMINUM RIVETS TO BE INSTALLED WET WITH BMS 5-95 SEALANT.

J 0.50 INCH MAX DIA IS ALLOWED PROVIDED DAMAGE IS A MINIMUM OF 6.0 INCHES FROM ANY OTHER DAMAGE AND 1.0 INCH MINIMUM FROM ANY HOLE OR EDGE. A MINIMUM OF 0.10 INCH DELAMINATION FROM EDGE IS ALLOWED. TREAT DAMAGE PER A.

K SEE DETAIL VII FOR FRONT SPAR LOWER INBOARD FLANGE DAMAGE LOCATION.

L TRIM OUT THE LOWER FORWARD INBOARD EDGE OF THE SPAR FLANGE TO REMOVE THE DELAMINATED MATERIAL AS NECESSARY WITHIN THE LIMITS AS SHOWN IN DETAIL VII.

- STAY A MINIMUM OF 0.050 INCH FROM THE EDGE OF THE PART AS SHOWN IN DETAIL VII.
- KEEP A MINIMUM CORNER RADIUS OF 0.25 INCH IN REWORKED AREAS.
- KEEP A MINIMUM 2.5 D EDGE MARGIN FROM ADJACENT FASTENER LOCATIONS.

DO NOT TRIM THE NOSE SKIN OR LOWER SKIN.

DO AN INSTRUMENTED NON-DESTRUCTIVE INSPECTION (NDI) ON SPAR TO MAKE SURE THAT THERE IS NO MORE DELAMINATION. REFER TO 737-NDT PART 4 51-00-01.

SEAL THE TRIMMED AREA OF SPAR FLANGE WITH BMS 8-301 RESIN.

Aileron Structure Allowable Damage (Graphite Composite Aileron)
Figure 8 (Sheet 2)

BOEING PROPRIETARY - Copyright © - Unpublished Work - See title page for details.

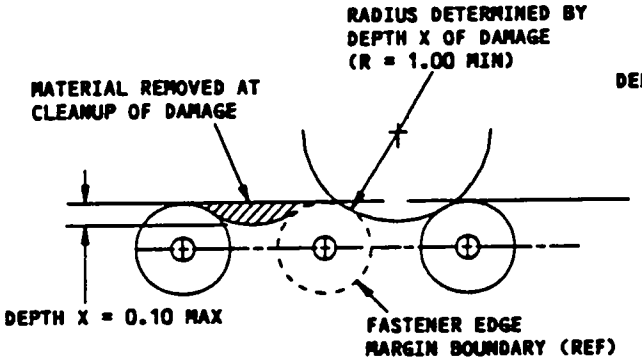

DAMAGE CLEANUP OF EDGES WHERE FASTENER EDGE MARGINS DO NOT OVERLAP

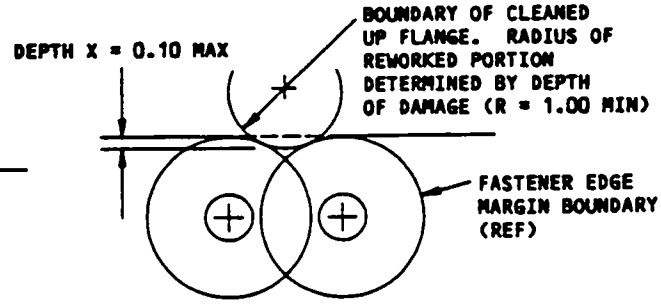

DAMAGE CLEANUP OF EDGES WHERE FASTENER EDGE MARGINS OVERLAP

DETAIL II

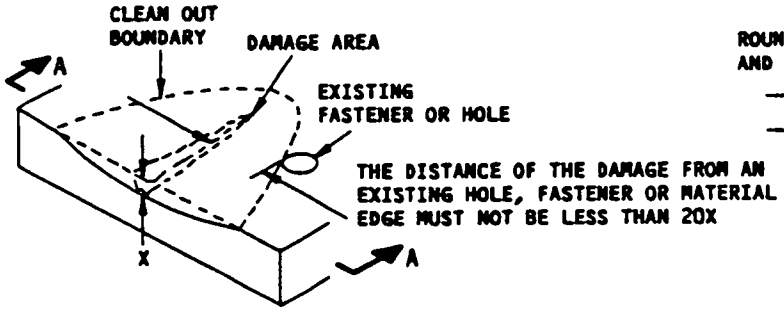

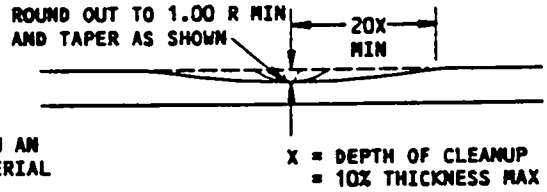

SECTION A-A

REMOVAL OF NICK, GOUGE, SCRATCH, AND CORROSION DAMAGE ON A SURFACE
DETAIL III

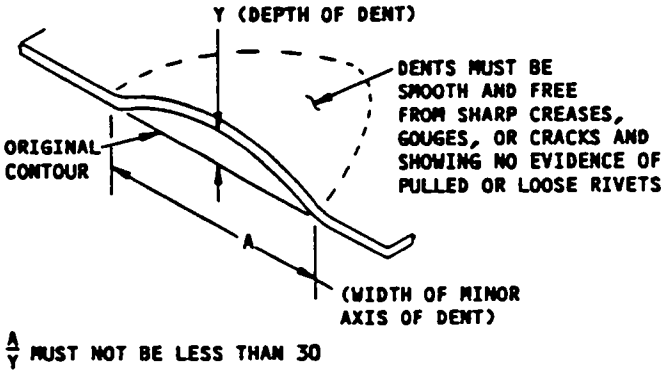

ALLOWABLE DAMAGE FOR DENT
DETAIL IV

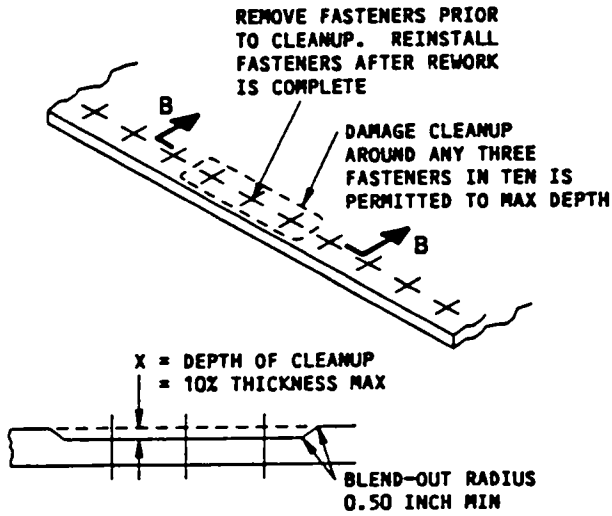

SECTION B-B
DAMAGE CLEANUP
DETAIL V

Aileron Structure Allowable Damage (Graphite Composite Aileron)
Figure 8 (Sheet 3)

141570

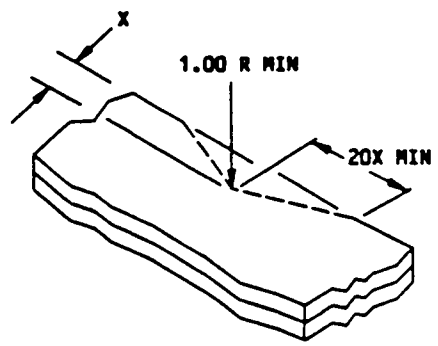

X = DEPTH OF CLEANUP = 0.10 MAX

REMOVAL OF DAMAGE ON AN EDGE

DETAIL VI

Aileron Structure Allowable Damage (Graphite Composite Aileron)
Figure 8 (Sheet 4)

141572

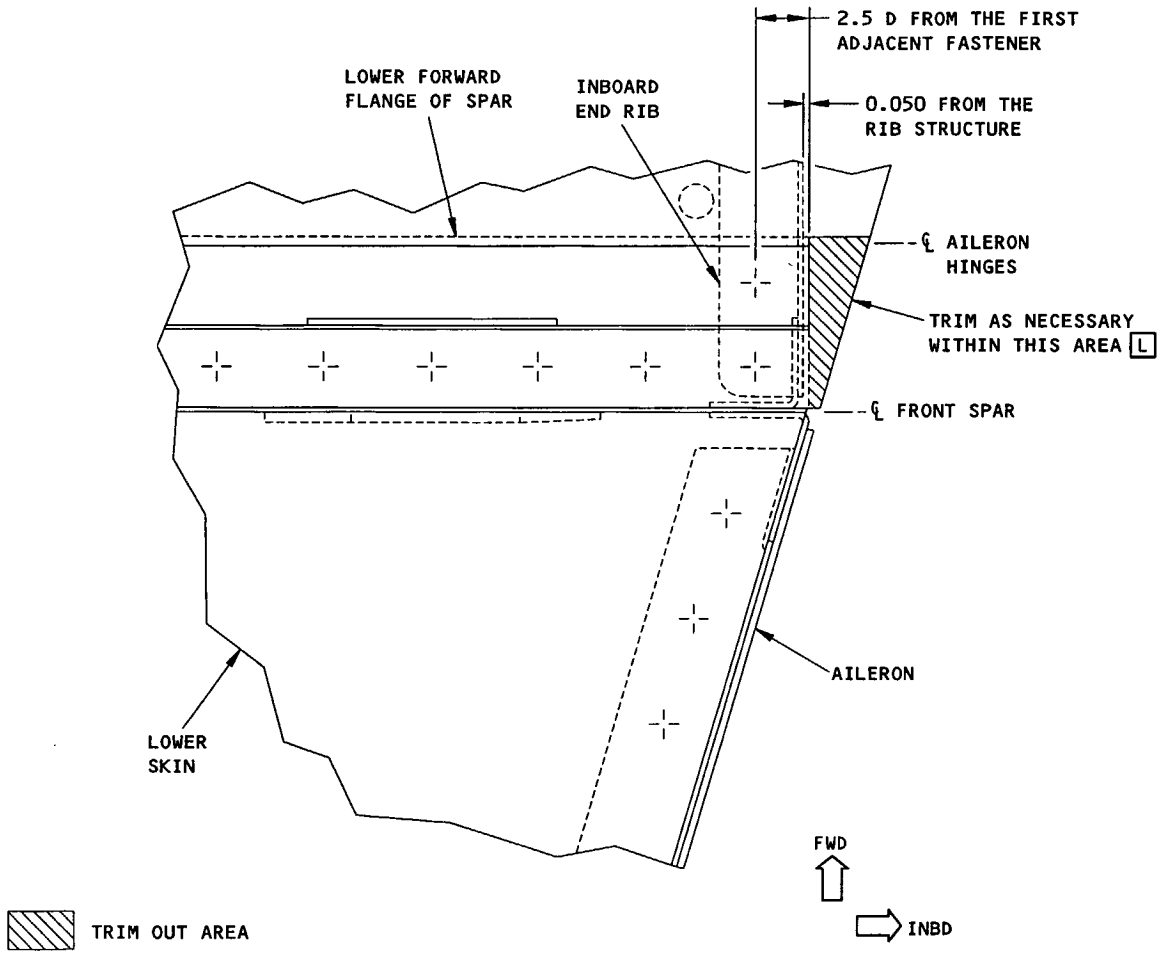

LEFT SIDE AILERON IS SHOWN, RIGHT SIDE IS OPPOSITE
DETAIL VII

Aileron Structure Allowable Damage (Graphite Composite Aileron)
Figure 8 (Sheet 5)

BOEING PROPRIETARY - Copyright © - Unpublished Work - See title page for details.

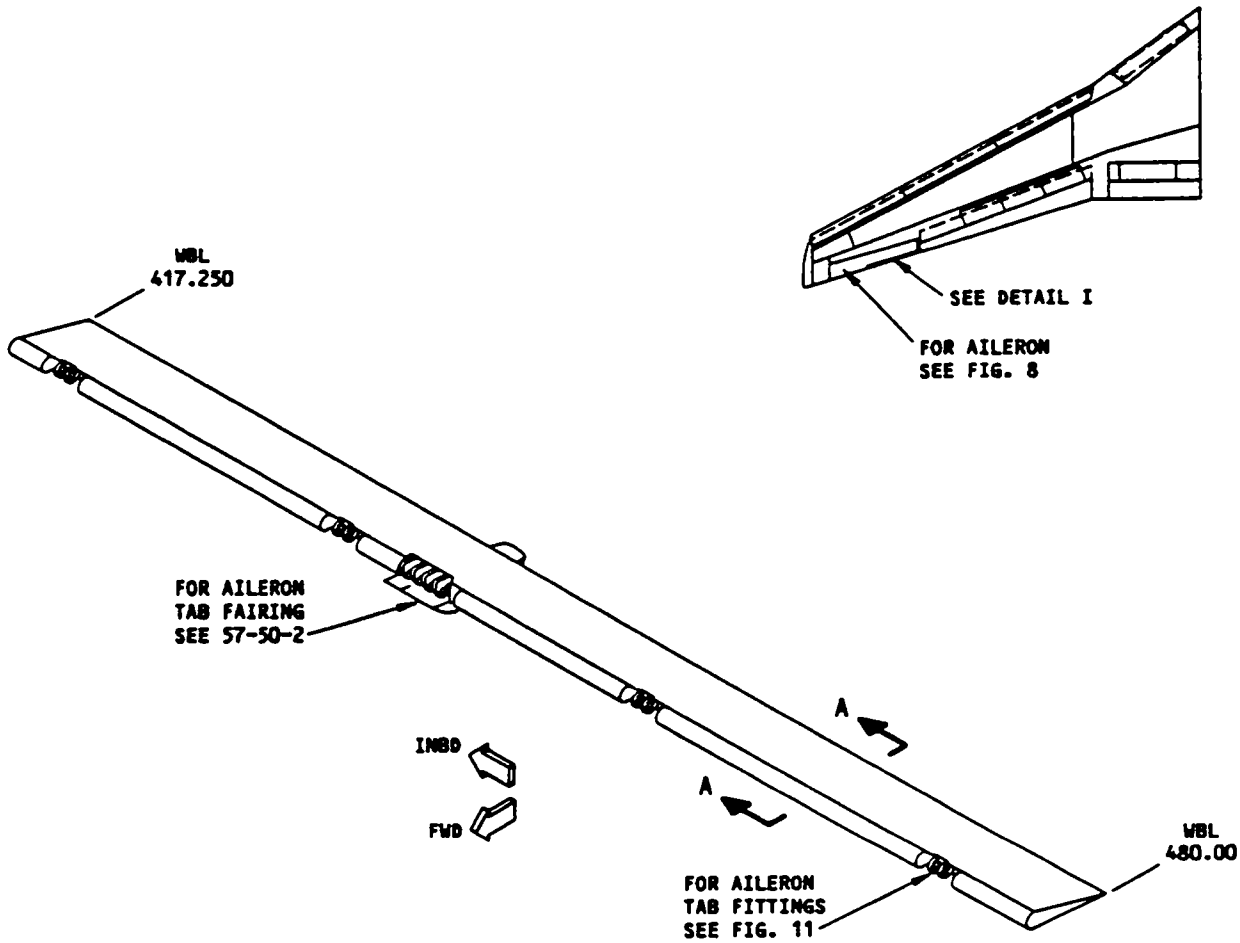

DETAIL I

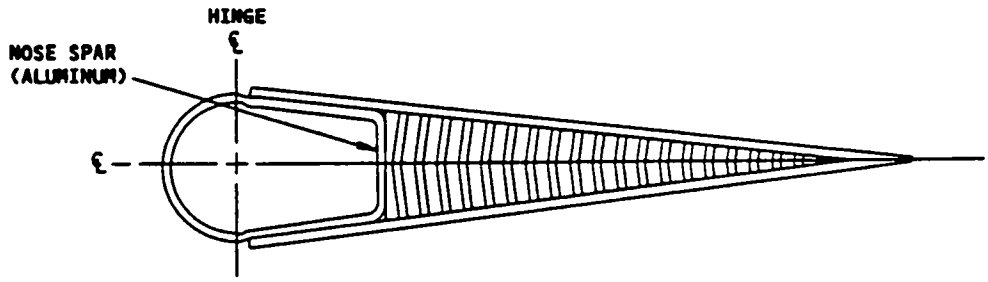

SECTION A-A

Aileron Tab Structure Allowable Damage (Graphite Composite Aileron)
Figure 9 (Sheet 1)

141576

DESCRIPTION	CRACKS	NICKS, GOUGES, SCRATCHES AND CORROSION	DENTS	HOLES AND PUNCTURES
NOSE SPAR	A	B	C	D

ALLOWABLE DAMAGE FOR DETAIL I

NOTES

- THE ALLOWABLE DAMAGE LIMITS GIVEN IN THIS FIGURE WILL NOT HAVE AN EFFECT ON A STRUCTURALLY SIGNIFICANT ITEM (SSI) GIVEN IN SRM 51-00-4, FIG. 3. THUS, NO CHANGE TO THE SUPPLEMENTAL STRUCTURAL INSPECTION DOCUMENT (SSID) INSPECTION PROGRAM IS NECESSARY.
- FOR REWORKED ALUMINUM AREAS APPLY A CHEMICAL CONVERSION COATING AS GIVEN IN SRM 51-10-2.
- REFINISH REWORKED AREAS AS GIVEN IN AMM 51-20.
- FOR INVESTIGATION AND CLEANUP OF DAMAGE, REFER TO SRM 51-10.

A CRACKS NOT ALLOWED EXCEPT FOR EDGE CRACKS WHICH MUST BE REMOVED PER DETAILS II AND VI.

B NICKS, GOUGES, SCRATCHES, AND CORROSION REMOVED PER DETAILS II, III, V AND VI ARE ALLOWED PROVIDED THE MAXIMUM PERMISSIBLE DEPTH OF DAMAGE IS NOT EXCEEDED.

C DENTS ALLOWED PER DETAIL IV.

D HOLES UP TO 0.25 INCH DIA ARE ALLOWED PROVIDED THEY ARE LOCATED 4D FROM ANY OTHER HOLE, FASTENER, PART EDGE, OR OTHER DAMAGE AND ARE FILLED WITH 2117-T3 OR T4 ALUMINUM RIVETS. ALUMINUM RIVETS TO BE INSTALLED WET WITH BMS 5-95 SEALANT. ALL OTHER HOLES TO BE REPAIRED.

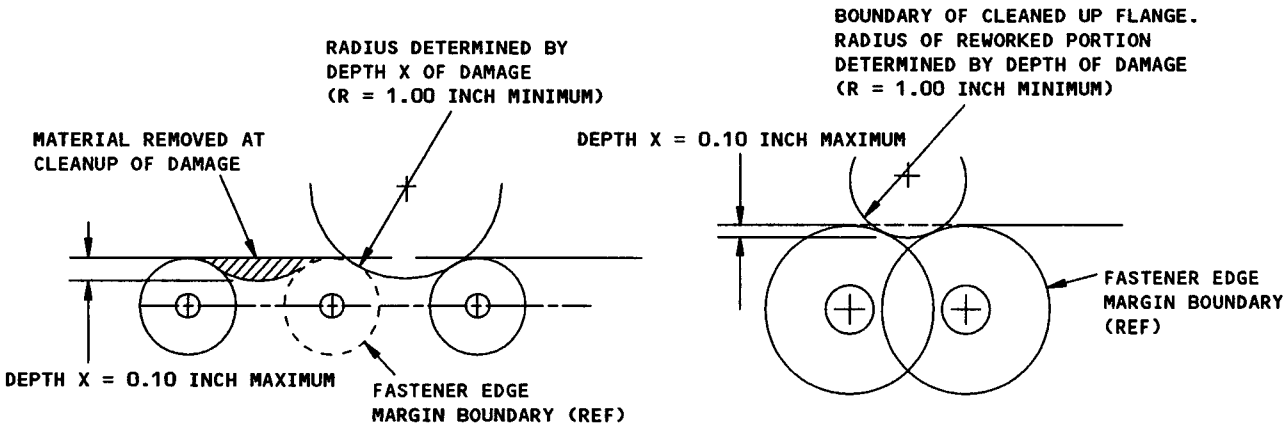

DAMAGE CLEANUP OF EDGES WHERE FASTENER EDGE MARGINS DO NOT OVERLAP

DAMAGE CLEANUP OF EDGES WHERE FASTENER EDGE MARGINS OVERLAP

DETAIL II

Aileron Tab Structure Allowable Damage (Graphite Composite Aileron)
Figure 9 (Sheet 2)

BOEING PROPRIETARY - Copyright © - Unpublished Work - See title page for details.

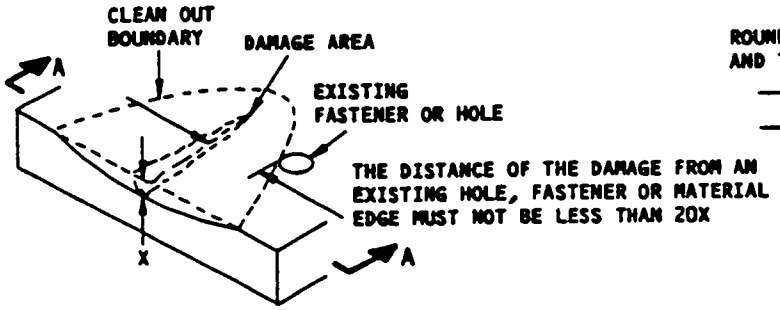

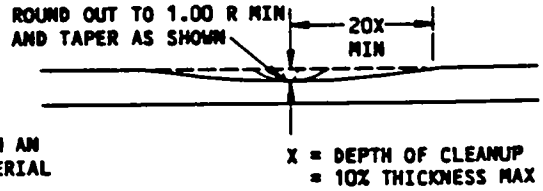

SECTION A-A

REMOVAL OF NICK, GOUGE, SCRATCH, AND CORROSION DAMAGE ON A SURFACE
DETAIL III

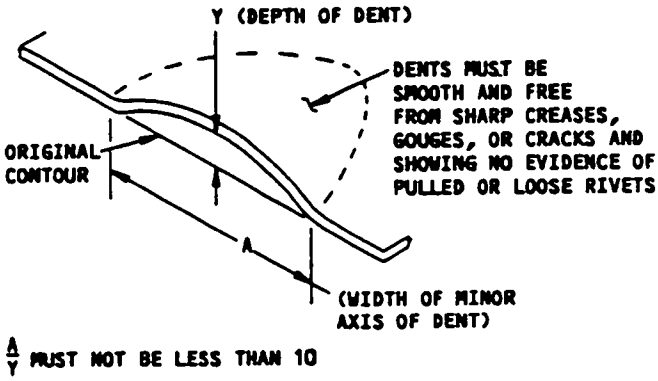

ALLOWABLE DAMAGE FOR DENT
DETAIL IV

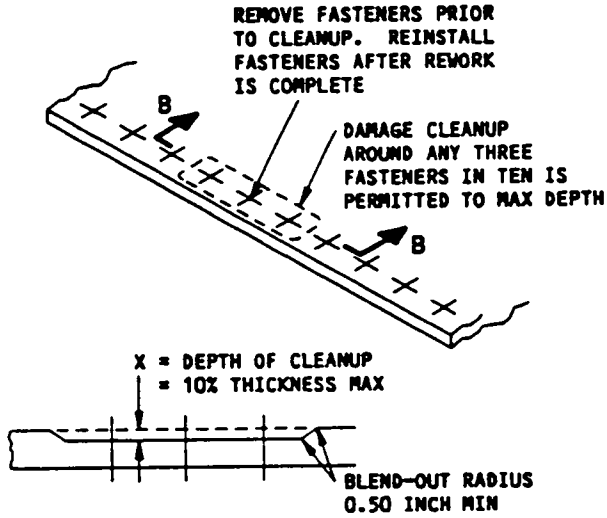

SECTION B-B
DAMAGE CLEANUP
DETAIL V

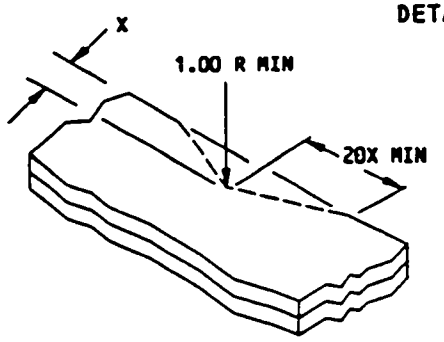

X = DEPTH OF CLEANUP = 0.10 MAX

REMOVAL OF DAMAGE ON AN EDGE
DETAIL VI

Aileron Tab Structure Allowable Damage (Graphite Composite Aileron)
Figure 9 (Sheet 3)

141582

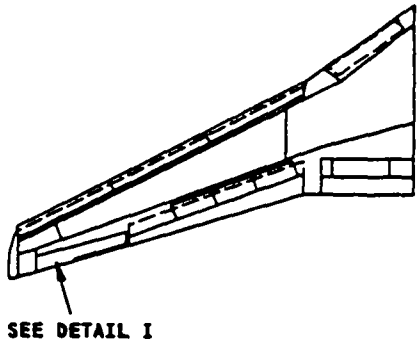

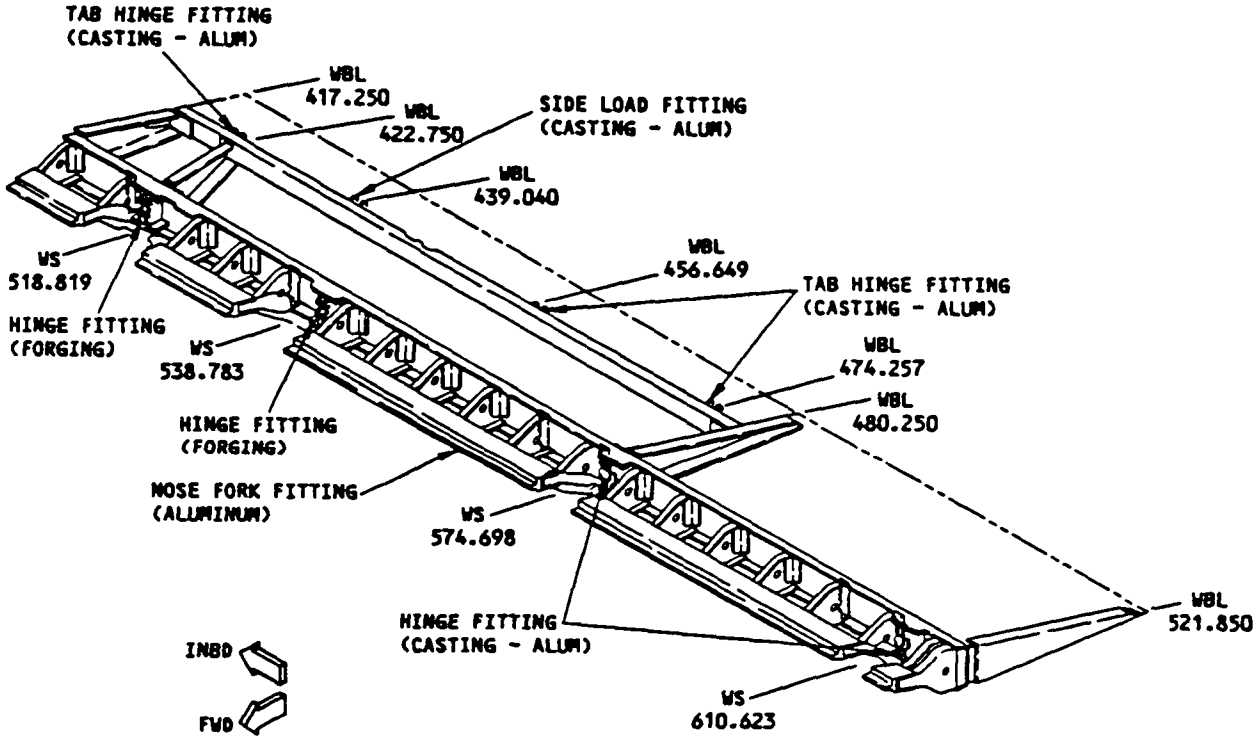

AILERON
DETAIL I

Aileron Fitting Allowable Damage (Graphite Composite Aileron)
Figure 10 (Sheet 1)

141590

DESCRIPTION	CRACKS	NICKS, GOUGES, SCRATCHES AND CORROSION	DENTS	HOLES AND PUNCTURES
HINGE FITTINGS [C] SIDE LOAD FITTING	[A]	[B]	NOT ALLOWED	NOT ALLOWED
NOSE FORK FITTING [C]	[A]	[D]	NOT ALLOWED	NOT ALLOWED

ALLOWABLE DAMAGE FOR DETAIL I

NOTES

- THE ALLOWABLE DAMAGE LIMITS GIVEN IN THIS FIGURE WILL NOT HAVE AN EFFECT ON A STRUCTURALLY SIGNIFICANT ITEM (SSI) GIVEN IN SRM 51-00-4, FIG. 3. THUS, NO CHANGE TO THE SUPPLEMENTAL STRUCTURAL INSPECTION DOCUMENT (SSID) INSPECTION PROGRAM IS NECESSARY.
- FOR INVESTIGATION AND CLEANUP OF DAMAGE, REFER TO SRM 51-10.
- FOR REWORKED ALUMINUM AREAS APPLY A CHEMICAL CONVERSION COATING AS GIVEN IN SRM 51-10-2.
- REFINISH REWORKED AREAS AS GIVEN IN AMM 51-20.
- SHOT PEEN REWORKED AREAS AS GIVEN IN SOPM 51-10-03.

[A] CLEAN UP EDGE CRACKS PER DETAILS II AND V. OTHER CRACKS NOT ALLOWED.

[B] FOR EDGE DAMAGE SEE DETAILS II AND V. FOR OTHER DAMAGE SEE DETAIL III. FOR LUG DAMAGE SEE DETAIL IV.

[C] DAMAGE CLEANUP IS NOT ALLOWED ON LUG BORE SURFACE.

[D] FOR EDGE DAMAGE SEE DETAILS II AND V. FOR OTHER DAMAGE SEE DETAIL III.

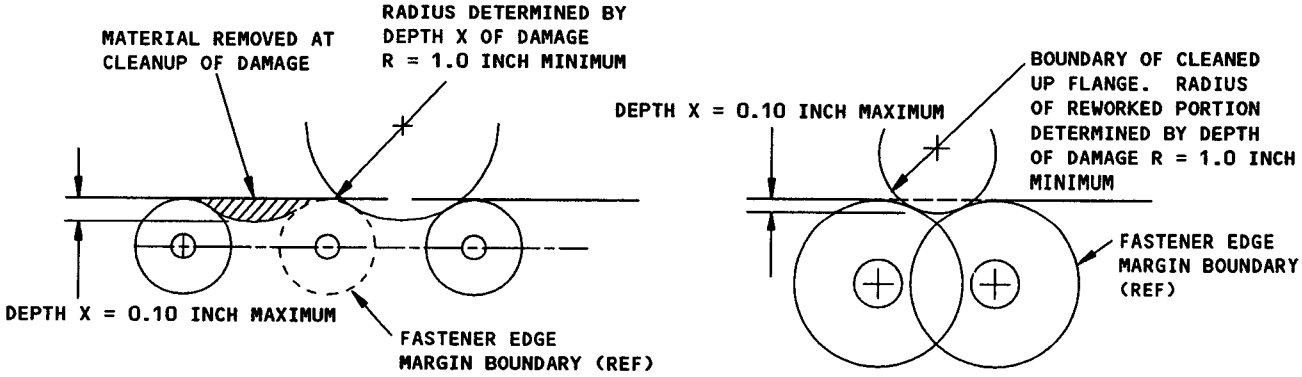

DAMAGE CLEANUP OF EDGES WHERE FASTENER EDGE MARGINS DO NOT OVERLAP

DAMAGE CLEANUP OF EDGES WHERE FASTENER EDGE MARGINS OVERLAP

DETAIL II

Aileron Fitting Allowable Damage (Graphite Composite Aileron)
Figure 10 (Sheet 2)

BOEING PROPRIETARY - Copyright © - Unpublished Work - See title page for details.

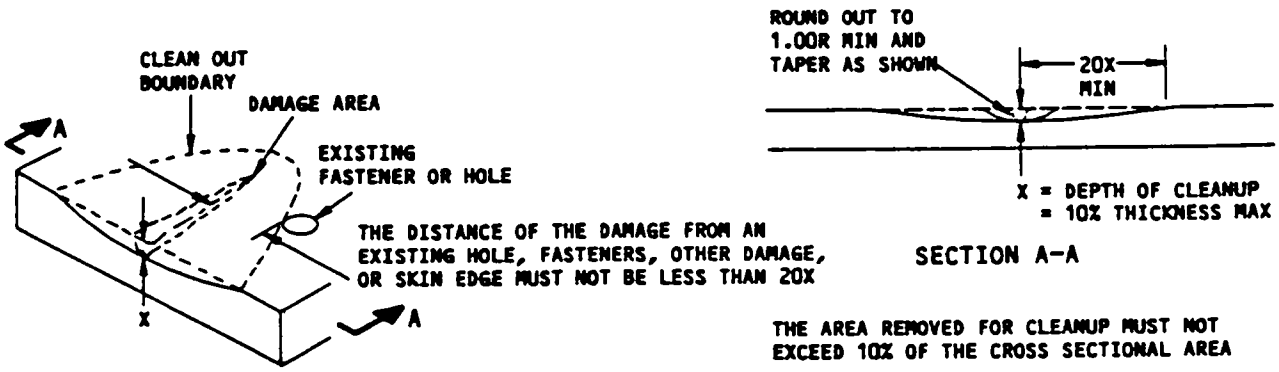

REMOVAL OF NICK, GOUGE, SCRATCH, AND CORROSION DAMAGE ON A SURFACE
DETAIL III

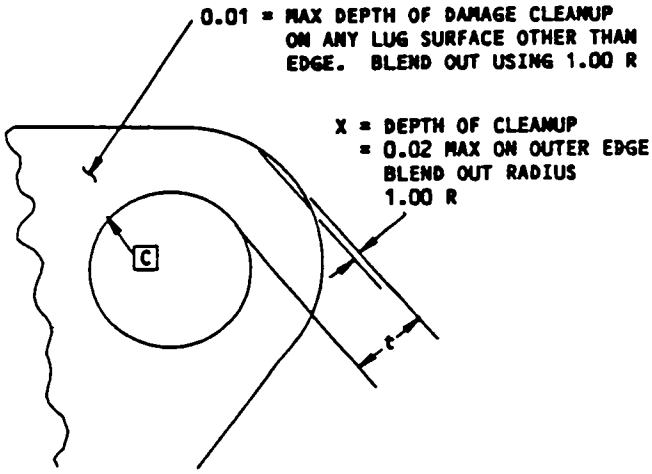

DAMAGE CLEANUP FOR LUG
DETAIL IV

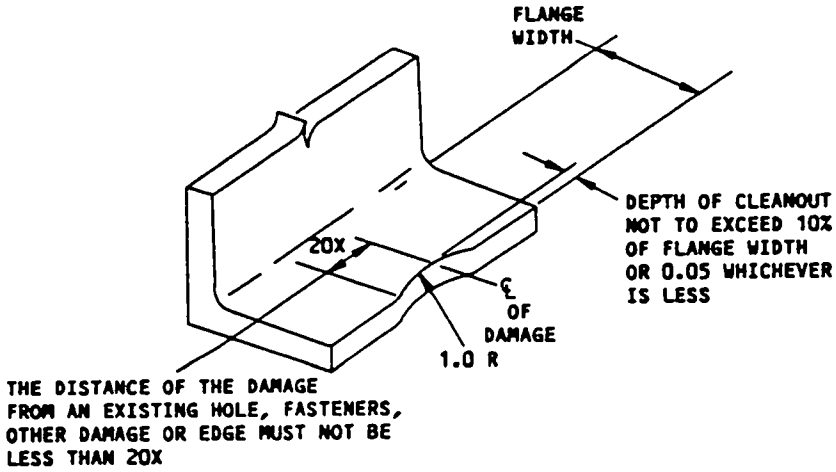

REMOVAL OF EDGE DAMAGE FROM
FREE FLANGE WITHOUT FASTENERS
DETAIL V

Aileron Fitting Allowable Damage (Graphite Composite Aileron)
Figure 10 (Sheet 3)

141594

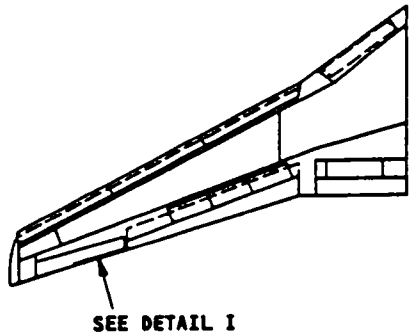

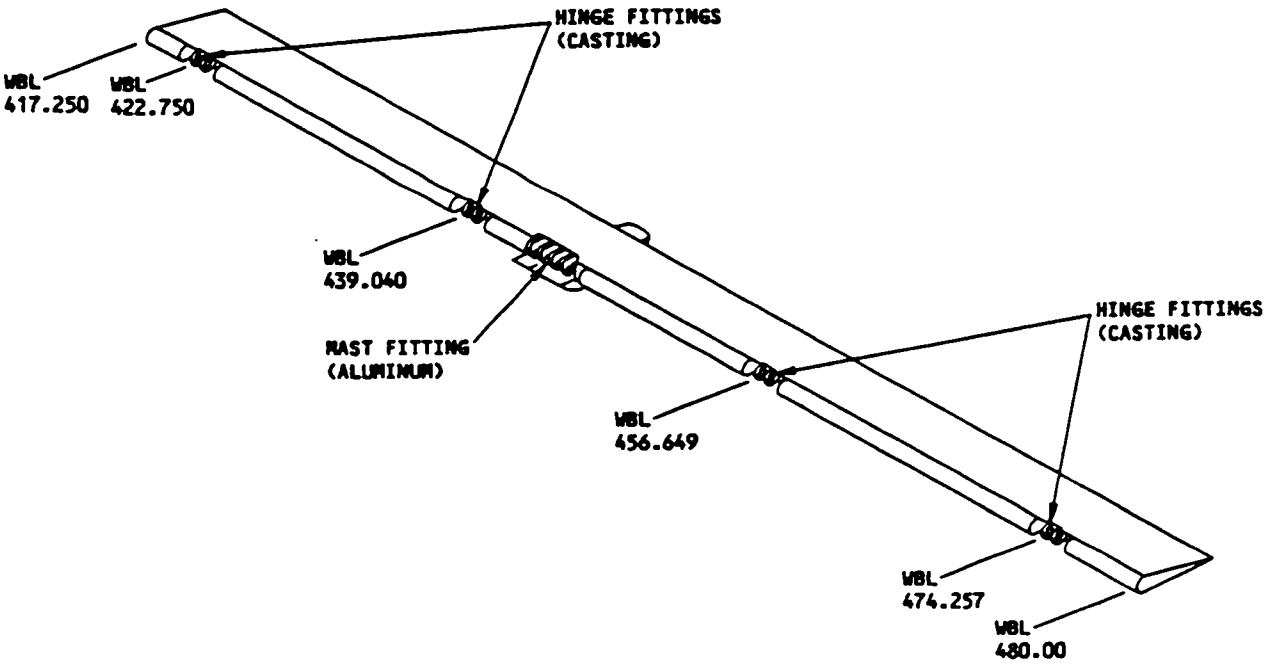

AILERON TAB
DETAIL I

Aileron Tab Fitting Allowable Damage (Graphite Composite Aileron)
Figure 11 (Sheet 1)

141796

DESCRIPTION	CRACKS	NICKS, GOUGES, SCRATCHES AND CORROSION	DENTS	HOLES AND PUNCTURES
HINGE FITTINGS	A	B	NOT ALLOWED	NOT ALLOWED
MAST FITTING	A	B	NOT ALLOWED	NOT ALLOWED

ALLOWABLE DAMAGE FOR DETAIL I

NOTES

- THE ALLOWABLE DAMAGE LIMITS GIVEN IN THIS FIGURE WILL NOT HAVE AN EFFECT ON A STRUCTURALLY SIGNIFICANT ITEM (SSI) GIVEN IN SRM 51-00-4, FIG. 3. THUS, NO CHANGE TO THE SUPPLEMENTAL STRUCTURAL INSPECTION DOCUMENT (SSID) INSPECTION PROGRAM IS NECESSARY.
- FOR INVESTIGATION AND CLEANUP OF DAMAGE, REFER TO SRM 51-10.
- FOR REWORKED ALUMINUM AREAS APPLY A CHEMICAL CONVERSION COATING AS GIVEN IN SRM 51-10-2.
- REFINISH REWORKED AREAS AS GIVEN IN AMM 51-20.
- SHOT PEEN REWORKED AREAS AS GIVEN IN SOPM 51-10-03.

A CLEAN UP EDGE CRACKS PER DETAILS II AND V. OTHER CRACKS NOT ALLOWED.

B FOR EDGE DAMAGE SEE DETAILS II AND V. FOR OTHER DAMAGE SEE DETAIL III. FOR LUG DAMAGE SEE DETAIL IV.

C DAMAGE CLEANUP IS NOT ALLOWED ON LUG BORE SURFACE.

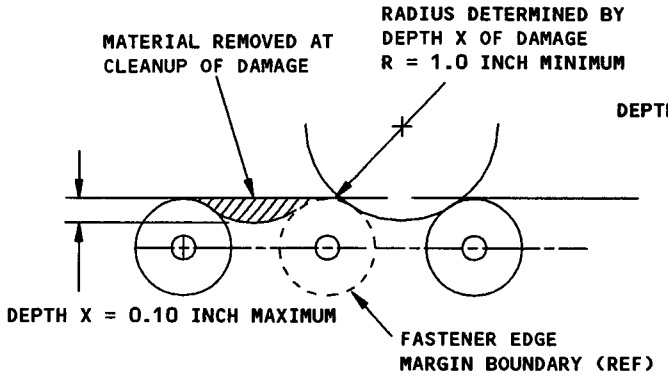

DAMAGE CLEANUP OF EDGES WHERE FASTENER EDGE MARGINS DO NOT OVERLAP

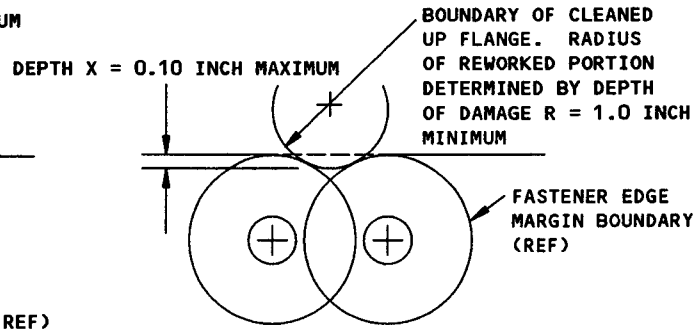

DAMAGE CLEANUP OF EDGES WHERE FASTENER EDGE MARGINS OVERLAP

DETAIL II

Aileron Tab Fitting Allowable Damage (Graphite Composite Aileron)
Figure 11 (Sheet 2)

BOEING PROPRIETARY - Copyright © - Unpublished Work - See title page for details.

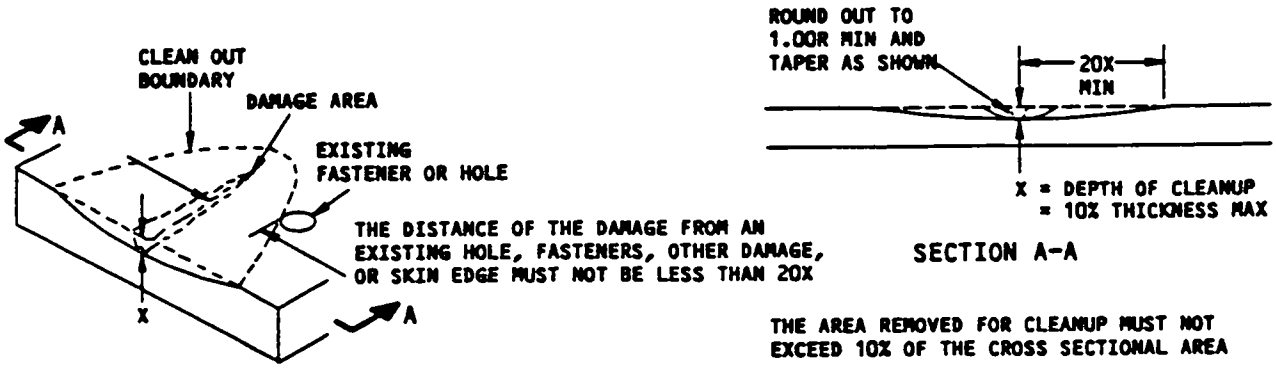

REMOVAL OF NICK, GOUGE, SCRATCH, AND CORROSION DAMAGE ON A SURFACE
DETAIL III

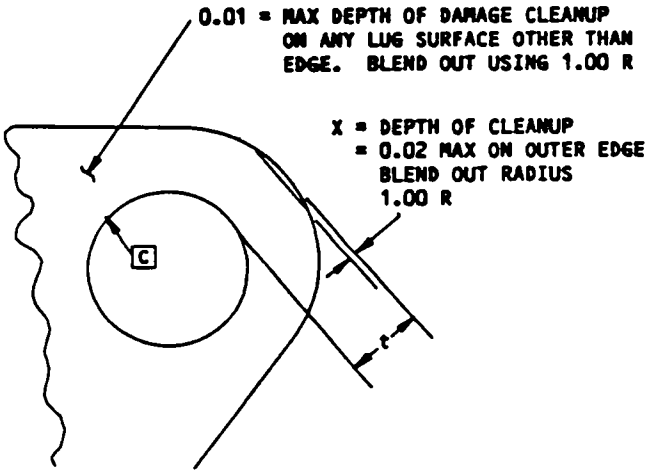

DAMAGE CLEANUP FOR LUG
DETAIL IV

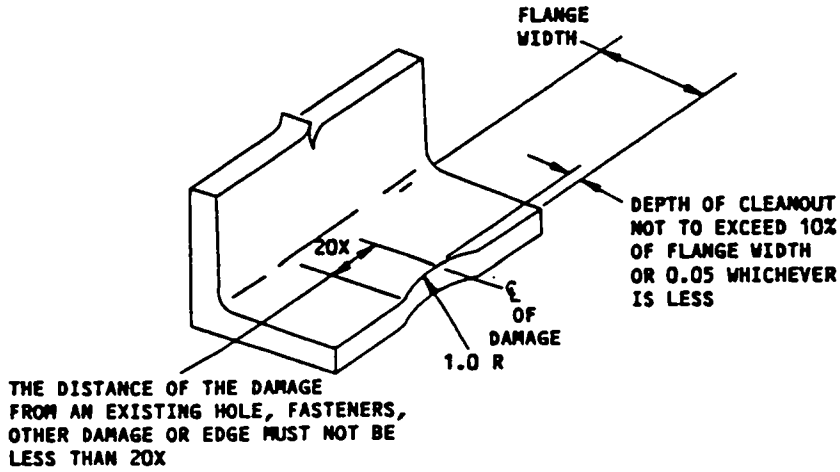

REMOVAL OF EDGE DAMAGE FROM
FREE FLANGE WITHOUT FASTENERS
DETAIL V

Aileron Tab Fitting Allowable Damage (Graphite Composite Aileron)
Figure 11 (Sheet 3)

141798

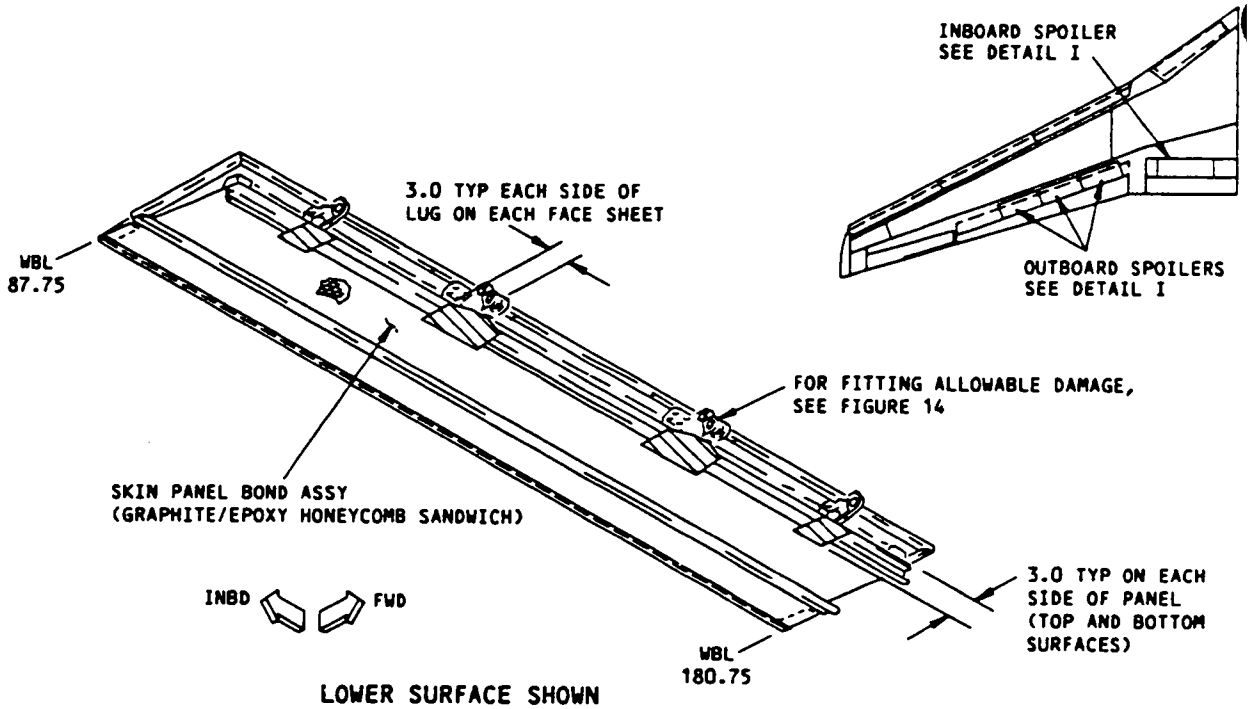

LOWER SURFACE SHOWN
INBOARD SPOILER

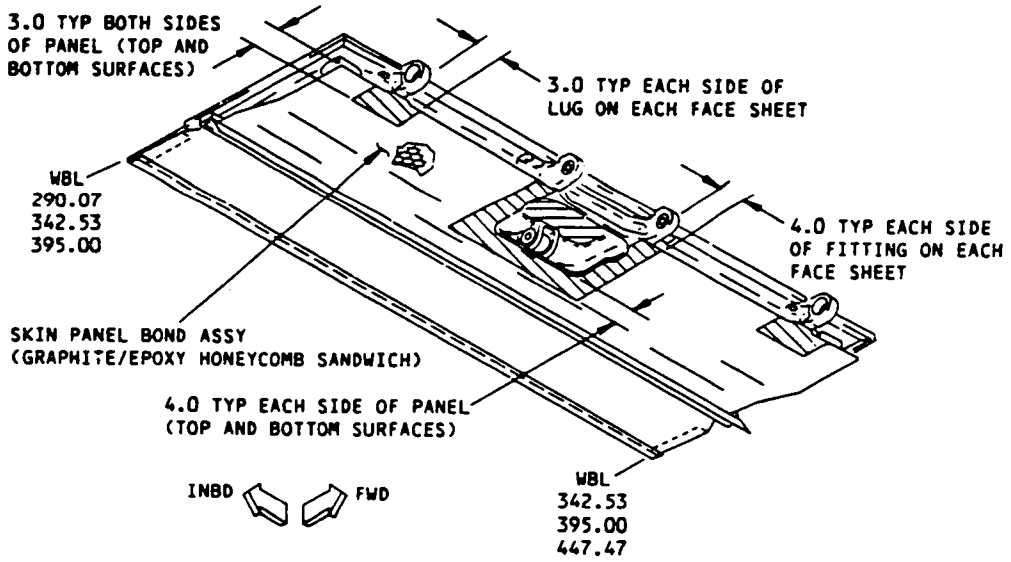

LOWER SURFACE SHOWN
OUTBOARD SPOILERS

CRITICAL AREAS (SHADED)
CONTACT THE BOEING COMPANY
FOR ALLOWABLE DAMAGE

DETAIL I

Spoiler Skin Allowable Damage (Graphite Composite Spoiler)
Figure 12 (Sheet 1)

DESCRIPTION	CRACKS	NICKS, GOUGES, SCRATCHES AND CORROSION	DENTS	HOLES AND PUNCTURES	DELAMINATION	EDGE EROSION
SKIN PANEL BOND ASSY	B	C	D	B	B F G	SEE DETAIL IV

ALLOWABLE DAMAGE FOR DETAIL I

NOTES

- THE ALLOWABLE DAMAGE LIMITS GIVEN IN THIS FIGURE WILL NOT HAVE AN EFFECT ON A STRUCTURALLY SIGNIFICANT ITEM (SSI) GIVEN IN SRM 51-00-4, FIG. 3. THUS, NO CHANGE TO THE SUPPLEMENTAL STRUCTURAL INSPECTION DOCUMENT (SSID) INSPECTION PROGRAM IS NECESSARY.
- THESE ALLOWABLE DAMAGE LIMITS ARE FOR AIRPLANES WITH GRAPHITE EPOXY SPOILERS. FOR AIRPLANES WITH ALUMINUM HONEYCOMB SPOILERS, REFER TO FIG. 5.
- THESE ALLOWABLE DAMAGE LIMITS ARE FAA APPROVED CONTINGENT ON ACCOMPLISHMENT OF THE INSPECTIONS AT THE INTERVALS CONTAINED HEREIN.
- REFER TO SRM 51-10 FOR THE INVESTIGATION AND CLEANUP OF DAMAGE.
- REFER TO AMM 51-20 TO APPLY THE FINISH TO THE REWORKED AREA.

A CLEAN THE DAMAGED AREA. SEAL THE DAMAGED AREA WITH ALUMINUM FOIL TAPE (SPEED TAPE) 3M-Y436 OR AN EQUIVALENT. KEEP A RECORD OF THE LOCATION WHERE THE SPEED TAPE IS INSTALLED. MAKE AN INSPECTION OF THAT LOCATION NO MORE THAN 65 FLIGHT HOURS AFTER THE TAPE IS APPLIED.

REPLACE THE TAPE IF IT STARTS TO COME OFF OR DETERIORATION IS FOUND. REPAIR THE DAMAGE NO MORE THAN 1000 FLIGHT HOURS AFTER THE TAPE IS APPLIED. IF THE DAMAGE BECOMES LARGER IN LESS THAN 1000 FLIGHT HOURS, REPAIR THE DAMAGE NO MORE THAN FIVE FLIGHTS AFTER THAT.

B REMOVE THE EDGE DAMAGE AS SHOWN IN DETAILS II AND III. NOT MORE THAN ONE FASTENER HOLE IN SIX MAY BE CRACKED OR DAMAGED. DAMAGE MUST NOT BE MORE THAN 10% OF THE EDGEBAND LENGTH FOR EACH SIDE. A E

FOR DAMAGE IN OTHER AREAS SEE DETAIL V. DAMAGE IS PERMITTED TO ONE SURFACE AND HONEYCOMB CORE ONLY. PROTECT THE ALLOWABLE DAMAGE NOT REPAIRED AS DESCRIBED IN A.

C DAMAGE TO THE SURFACE RESIN IS PERMITTED. IF THERE IS FIBER DAMAGE, REFER TO B.

D DENTS RESULT IN DELAMINATION AND FIBER DAMAGE AND MUST BE TREATED AS HOLE OR PUNCTURE DAMAGE.

E CRACKS AND DELAMINATIONS ON THE EDGE TO A LENGTH OF 2 INCHES AND A DEPTH OF 0.5 INCH CAN BE SEALED AS FOLLOWS:

- APPLY ONE LAYER OF SPEED TAPE WHICH EXTENDS OUT 2 INCHES ALL AROUND THE DAMAGE
- APPLY A SECOND LAYER OF SPEED TAPE WHICH EXTENDS OUT 1 INCH ALL AROUND THE EDGES OF THE FIRST LAYER OF SPEED TAPE. A

DAMAGE LOCATIONS MUST BE A MINIMUM OF 10 TIMES THE DAMAGE LENGTH (EDGE TO EDGE) FROM OTHER DAMAGE LOCATIONS.

F BULGES CAN OCCUR IN THE UPPER LAMINATE SKIN AT THE HINGE AT THE CENTER OF THE OUTBOARD SPOILER.

G BULGES ARE PERMITTED UP TO 0.05 INCH ABOVE THE CONTOUR OF THE SKIN, UNLESS THEY HAVE ONE OR MORE OF THESE CONDITIONS:

- DELAMINATION BETWEEN SKIN PLIES
- A BULGE THAT BECOMES CONVEX AND CONCAVE WHEN PRESSURE IS APPLIED WITH YOUR HAND
- SEALANT THAT IS HARD OR HAS A CRACK
- DELAMINATION BETWEEN THE UPPER SKIN AND THE ACTUATOR HINGE FITTING.

REPAIR A SKIN BULGE BY THE NEXT "C" CHECK IF:

- IT IS MORE THAN 0.05 INCH ABOVE THE CONTOUR OF THE SKIN, OR
- IT BECOMES CONVEX AND CONCAVE WHEN PRESSURE IS APPLIED WITH YOUR HAND
- IT HAS A DELAMINATION.

REFER TO SRM 57-50-5, FIG. 7.

REMOVE THE INITIAL SEALANT AND APPLY NEW SEALANT IMMEDIATELY IF:

- THE SEALANT IS HARD OR HAS A CRACK, OR
- THERE IS DELAMINATION BETWEEN THE UPPER OR LOWER SKIN AND THE ACTUATOR HINGE FITTING.

Spoiler Skin Allowable Damage (Graphite Composite Spoiler)
Figure 12 (Sheet 2)

BOEING PROPRIETARY - Copyright © - Unpublished Work - See title page for details.

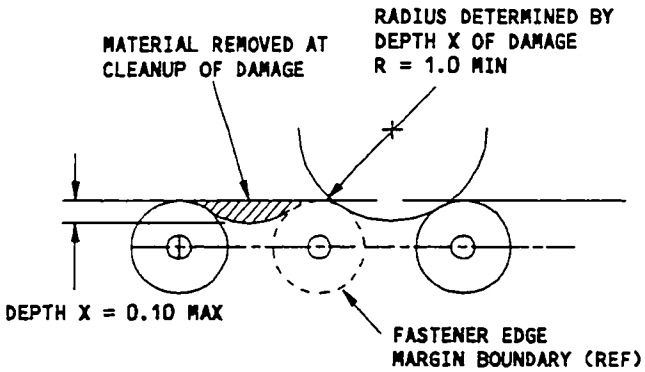

DAMAGE CLEANUP OF EDGES WHERE FASTENER EDGE MARGINS DO NOT OVERLAP

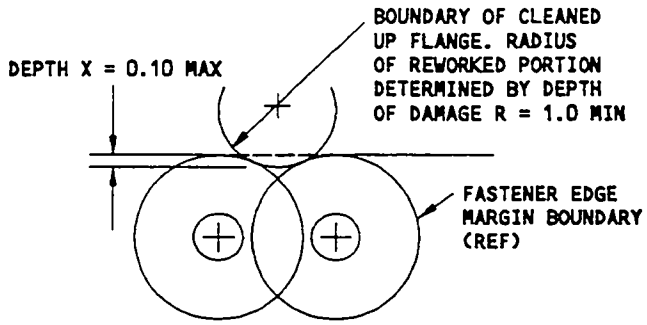

DAMAGE CLEANUP OF EDGES WHERE FASTENER EDGE MARGINS OVERLAP

DETAIL II

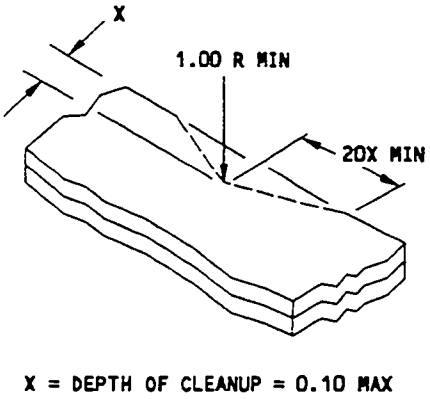

REMOVAL OF DAMAGE ON AN EDGE

DETAIL III

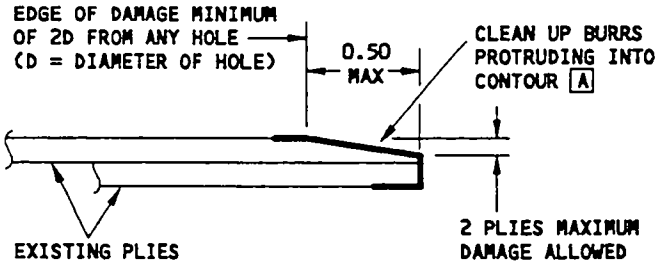

DAMAGE CLEANUP AND SEALING OF EDGE EROSION

DETAIL IV

Spoiler Skin Allowable Damage (Graphite Composite Spoiler)
Figure 12 (Sheet 3)

141801

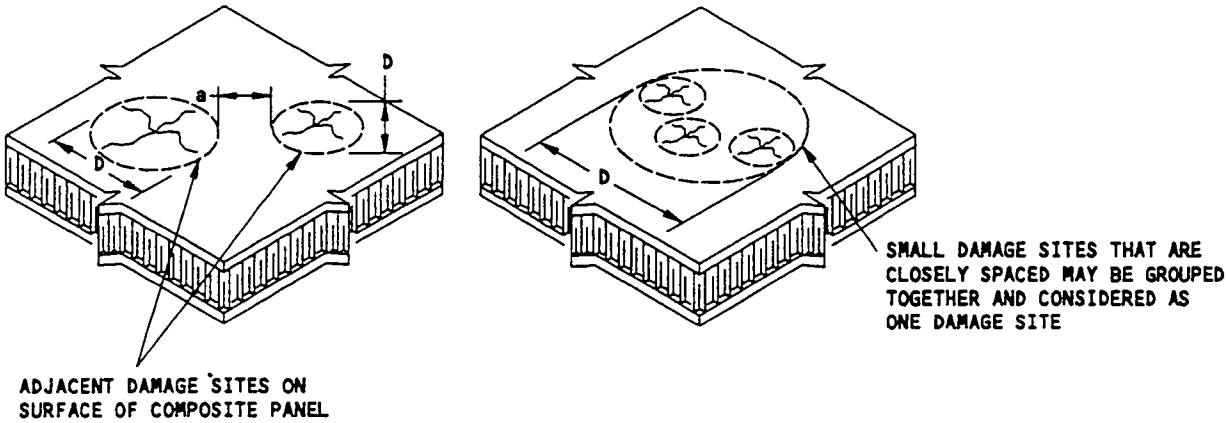

- DAMAGE TO THE COMPOSITE PANELS EXPOSED TO MULTIPLE IMPACTS, I.E., HAIL DAMAGE, CAN BE DETECTED WITH THE USE OF INSTRUMENTED NON-DESTRUCTIVE INSPECTION METHODS OR BY TAPPING THE SUSPECTED DAMAGE AREA WITH A SMALL METALLIC DISK OBJECT. THE INSPECTION SHOULD COVER THE AREA WITHIN 3 DIAMETERS AROUND THE EDGE OF THE VISIBLE DAMAGE SITE. FOR THE TAP TEST, USE A SOLID METAL DISK AND TAP THE DAMAGE AREA LIGHTLY BUT FIRMLY. ANY VOID AREAS SHOULD PRODUCE A DULL SOUND AS OPPOSED TO A SHARP RING ON A SOLID BONDED AREA.
- A DAMAGE SITE IS ANY SINGLE AREA OF A PANEL WHERE A DENT, CRACK, DELAMINATION, PUNCTURE, OR ANY COMBINATION OF THESE EXISTS. SMALL DAMAGE SITES THAT ARE CLOSELY SPACED MAY BE GROUPED TOGETHER AND CONSIDERED AS ONE DAMAGE SITE.
- 'D' IS FOUND BY MEASURING THE DIAMETER OF A CIRCLE DRAWN AROUND THE DAMAGE SITE OR CRACK. D = 2.0 MAX
- 'a' IS THE DISTANCE BETWEEN TWO ADJACENT DAMAGE SITES. a = 6.0 MIN

DAMAGE SIZING AND SPACING DATA FOR COMPOSITE PANELS
DETAIL V

Spoiler Skin Allowable Damage (Graphite Composite Spoiler)
Figure 12 (Sheet 4)

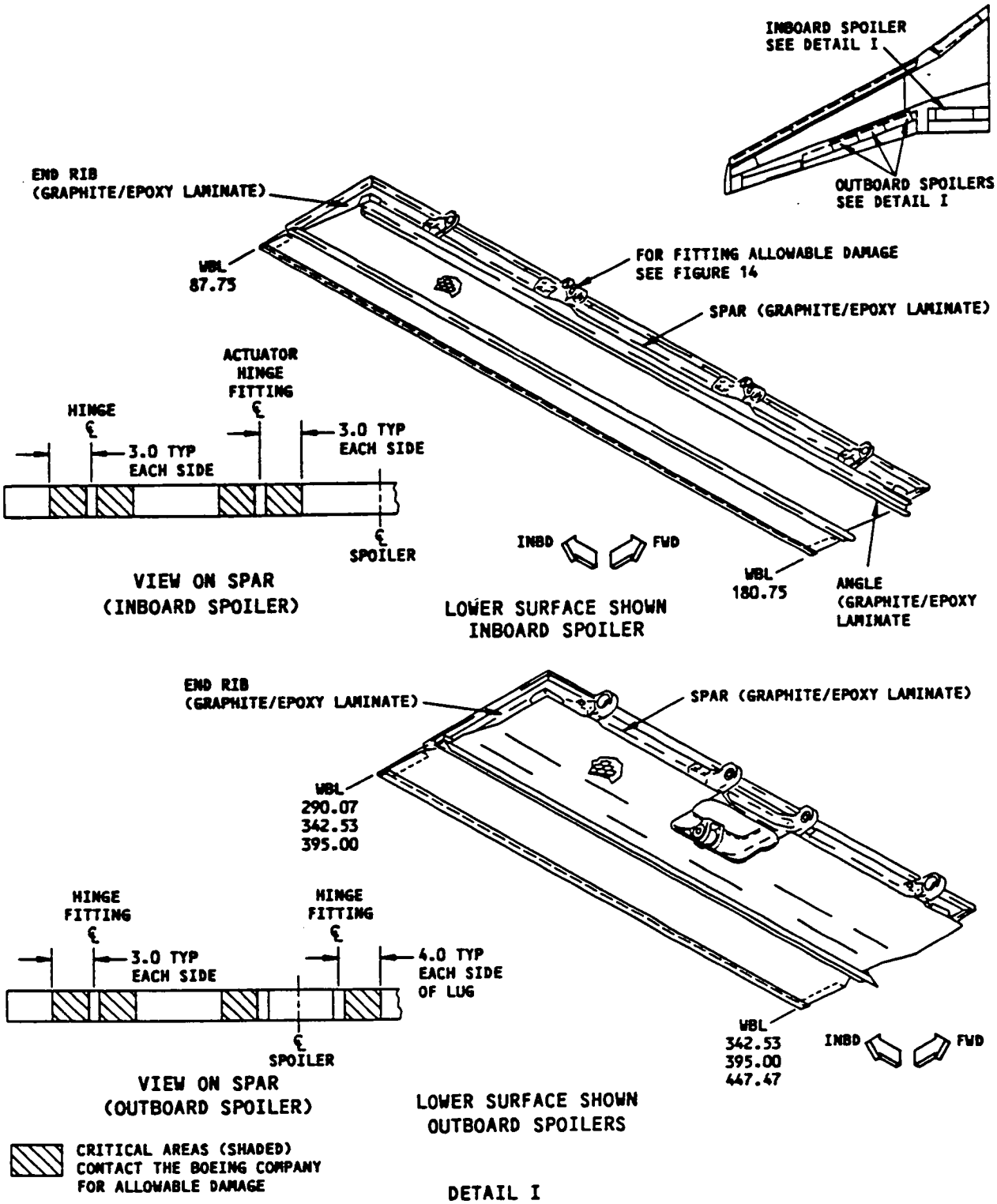

Spoiler Structure Allowable Damage (Graphite Composite Spoiler)
Figure 13 (Sheet 1)

141804

DESCRIPTION	CRACKS	NICKS, GOUGES, SCRATCHES AND CORROSION	DENTS	HOLES AND PUNCTURES	DELAMINATION
SPARS AND END RIBS	B	C	D	E	F
ANGLE	G	C	H	I	J

ALLOWABLE DAMAGE FOR DETAIL I

NOTES

- THE ALLOWABLE DAMAGE LIMITS GIVEN IN THIS FIGURE WILL NOT HAVE AN EFFECT ON A STRUCTURALLY SIGNIFICANT ITEM (SSI) GIVEN IN SRM 51-00-4, FIG. 3. THUS, NO CHANGE TO THE SUPPLEMENTAL STRUCTURAL INSPECTION DOCUMENT (SSID) INSPECTION PROGRAM IS NECESSARY.
- FOR INVESTIGATION AND CLEANUP OF DAMAGE, REFER TO SRM 51-10.
- REFINISH REWORKED AREAS AS GIVEN IN AMM 51-20.
- D = MAXIMUM DAMAGE DIMENSION.
- TYPICAL DAMAGE TO A LAMINATE EDGE MAY CONSIST OF EDGE CRUSHING, CRACKS OR DELAMINATION. DAMAGE AROUND HOLES MAY CONSIST OF OVALIZATION, FASTENER PULL-THROUGH OR CRACKS OUT OF HOLE. DAMAGE MAY REDUCE THE EFFECTIVE CROSS SECTIONAL AREA. DAMAGE TO EDGES SHOULD BE BLENDED OUT TO LIMITATIONS GIVEN FOR COMPONENT.

A PROTECT DAMAGE FROM ENTRANCE OF WATER, SUNLIGHT OR OTHER FOREIGN MATTER BY SEALING WITH ALUMINUM FOIL TAPE (SPEED TAPE) 3M-Y436 OR EQUIVALENT. RECORD THE LOCATION AND INSPECT EVERY "A" CHECK. REPAIR DAMAGE BY THE NEXT "C" CHECK.

B EDGE CRACKS MUST BE REMOVED AS GIVEN IN DETAILS II AND III. 1.0 INCH MAXIMUM LENGTH IS ALLOWED PROVIDED DAMAGE IS A MINIMUM OF 6.0 INCHES FROM ANY OTHER DAMAGE AND 4D MINIMUM FROM ANY HOLES OR PART EDGE A.

C IF FIBERS ARE DAMAGED, TREAT AS A CRACK. IF FIBERS ARE NOT DAMAGED, PROTECT AS GIVEN IN NOTE A.

D DENTS GENERALLY RESULT IN FIBER DAMAGE OR DELAMINATION WHICH MAY NOT BE APPARENT USING VISUAL OR TAP TESTING METHODS OF DETECTION. DENTS UP TO 1.0 INCH DIAMETER MAXIMUM (D) ARE ALLOWED BUT MUST BE A MINIMUM OF 6.0 INCHES (EDGE TO EDGE) FROM ANY OTHER DAMAGE AND 4D FROM ANY FASTENER HOLE OR PART EDGE. TREAT AS GIVEN IN NOTE A. IF FIBER DAMAGE OR DELAMINATION IS DETECTED REFER TO APPLICABLE DAMAGE DATA IN TABLE A.

E 0.5 INCH MAXIMUM DIAMETER IS ALLOWED IN HONEYCOMB AREA ONLY PROVIDED DAMAGE IS MINIMUM OF 6D FROM OTHER DAMAGE AND 4D MINIMUM FROM HOLE OR MATERIAL EDGE. DO NOT CLEAN UP DAMAGE EXCEPT TO REMOVE RESIN BURRS EXTENDING INTO SURFACE CONTOUR A.

F 0.50 INCH MAXIMUM DIAMETER IS ALLOWED PROVIDED THE DAMAGE IS A MINIMUM OF 6.0 INCHES FROM ANY OTHER DAMAGE AND 1.0 INCH MINIMUM FROM ANY HOLE OR EDGE. A MAXIMUM OF 0.10 INCH DELAMINATION FROM EDGE IS ALLOWED. PROTECT EDGE DAMAGE AS GIVEN IN A.

G EDGE CRACKS MUST BE REMOVED AS GIVEN IN DETAILS II AND III. 1.0 INCH MAXIMUM LENGTH IS ALLOWED PROVIDED DAMAGE IS A MINIMUM OF 3.0 INCHES FROM ANY OTHER DAMAGE AND 3D MINIMUM FROM ANY HOLES OR PART EDGE A.

H DENTS GENERALLY RESULT IN FIBER DAMAGE OR DELAMINATION WHICH MAY NOT BE APPARENT USING VISUAL OR TAP TESTING METHODS OF DETECTION. DENTS UP TO 1.0 INCH DIAMETER MAXIMUM (D) ARE ALLOWED BUT MUST BE A MINIMUM OF 3.0 INCHES (EDGE TO EDGE) FROM ANY OTHER DAMAGE AND 3D FROM ANY FASTENER HOLE OR PART EDGE. TREAT AS GIVEN IN NOTE A. IF FIBER DAMAGE OR DELAMINATION IS DETECTED REFER TO APPLICABLE DAMAGE DATA IN TABLE A.

I 0.50 INCH MAXIMUM DIAMETER IS ALLOWED PROVIDED DAMAGE IS A MINIMUM OF 3D FROM ANY OTHER DAMAGE, NEAREST HOLE, OR MATERIAL EDGE. DO NOT CLEAN UP DAMAGE EXCEPT TO REMOVE RESIN BURRS EXTENDING INTO SURFACE CONTOUR A.

J 1.0 INCH MAXIMUM DIAMETER IS ALLOWED PROVIDED DAMAGE IS A MINIMUM OF 3.0 INCHES FROM ANY OTHER DAMAGE AND 1.0 INCH MINIMUM FROM NEAREST HOLE OR MATERIAL EDGE. A MAXIMUM OF 0.10 INCH DELAMINATION FROM EDGE IS ALLOWED. PROTECT EDGE DAMAGE AS GIVEN IN A.

Spoiler Structure Allowable Damage (Graphite Composite Spoiler)
Figure 13 (Sheet 2)

BOEING PROPRIETARY - Copyright © - Unpublished Work - See title page for details.

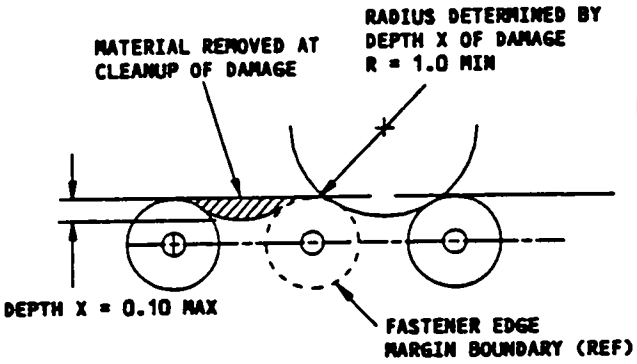

DAMAGE CLEANUP OF EDGES WHERE FASTENER EDGE MARGINS DO NOT OVERLAP

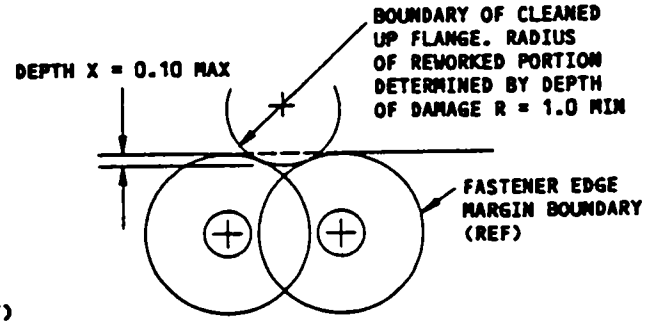

DAMAGE CLEANUP OF EDGES WHERE FASTENER EDGE MARGINS OVERLAP

DETAIL II

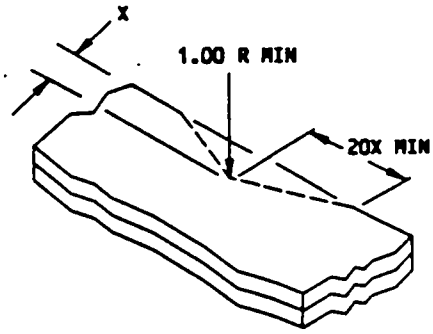

X = DEPTH OF CLEANUP = 0.10 MAX

REMOVAL OF DAMAGE ON AN EDGE

DETAIL III

Spoiler Structure Allowable Damage (Graphite Composite Spoiler)
Figure 13 (Sheet 3)

141808

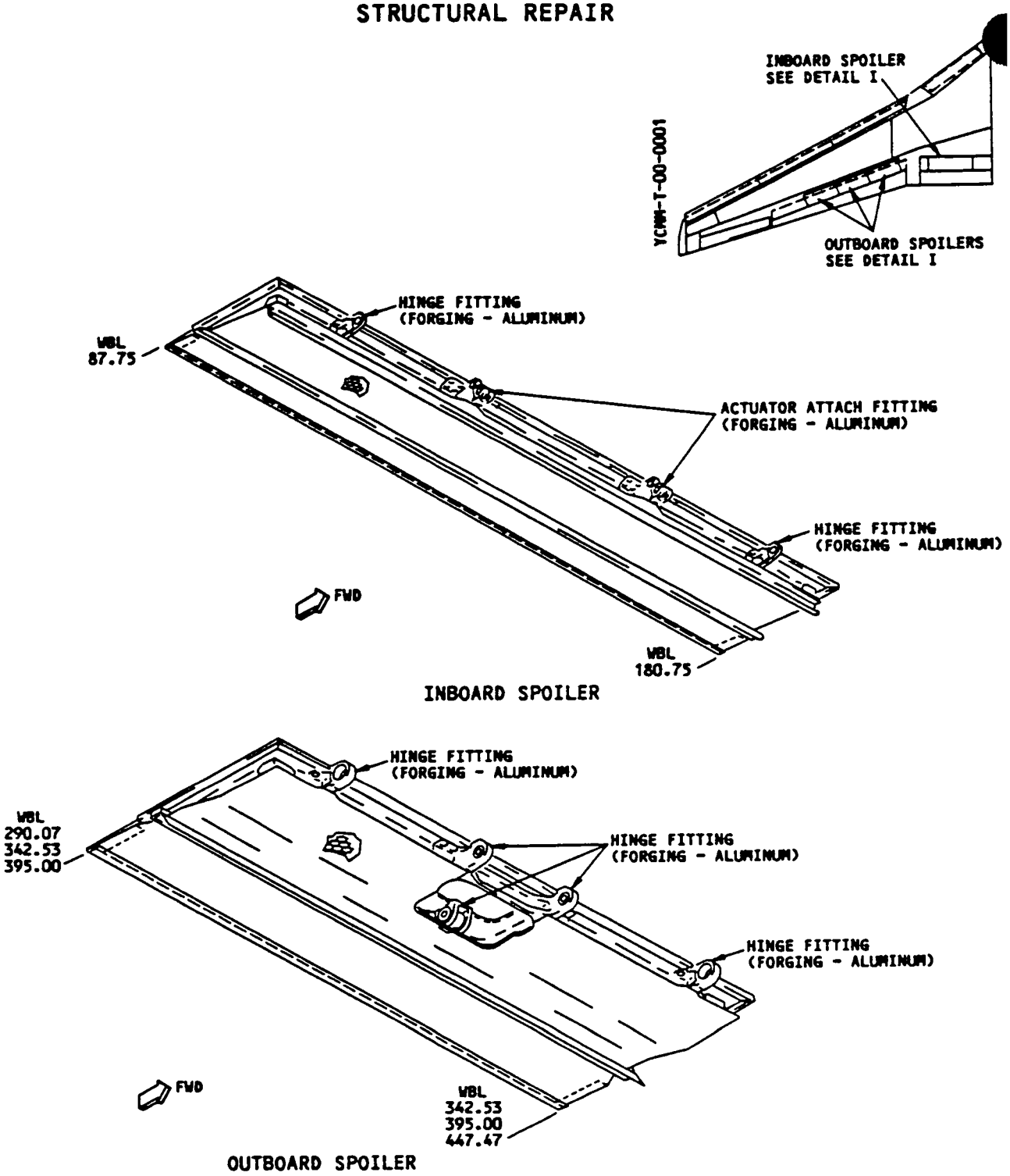

DETAIL I

Spoiler Fitting Allowable Damage (Graphite Composite Spoiler)
Figure 14 (Sheet 1)

141811

DESCRIPTION	CRACKS	NICKS, GOUGES, SCRATCHES AND CORROSION	DENTS	HOLES AND PUNCTURES
HINGE FITTINGS [C]	[A]	[B]	NOT ALLOWED	NOT ALLOWED
ACTUATOR ATTACH FITTINGS [C]	[A]	[B]	NOT ALLOWED	NOT ALLOWED

ALLOWABLE DAMAGE FOR DETAIL I

NOTES

- THE ALLOWABLE DAMAGE LIMITS GIVEN IN THIS FIGURE WILL NOT HAVE AN EFFECT ON A STRUCTURALLY SIGNIFICANT ITEM (SSI) GIVEN IN SRM 51-00-4, FIG. 3. THUS, NO CHANGE TO THE SUPPLEMENTAL STRUCTURAL INSPECTION DOCUMENT (SSID) INSPECTION PROGRAM IS NECESSARY.
- FOR THE INVESTIGATION AND CLEANUP OF DAMAGE, REFER TO SRM 51-10.
- FOR THE REWORKED ALUMINUM AREAS, APPLY A CHEMICAL CONVERSION COATING AS GIVEN IN SRM 51-10-2.
- APPLY THE FINISH TO THE REWORKED AREAS AS GIVEN IN AMM 51-20.
- SHOT PEEN REWORKED AREAS AS GIVEN IN SOPM 20-10-03.

[A] CLEAN UP EDGE CRACKS AS SHOWN IN DETAILS II AND V. OTHER CRACKS NOT ALLOWED.

[B] FOR EDGE DAMAGE, SEE DETAILS II AND V. FOR OTHER DAMAGE, SEE DETAIL III. FOR LUG DAMAGE, SEE DETAIL IV. [C]

[C] DAMAGE CLEANUP IS NOT ALLOWED ON LUG BORE SURFACE.

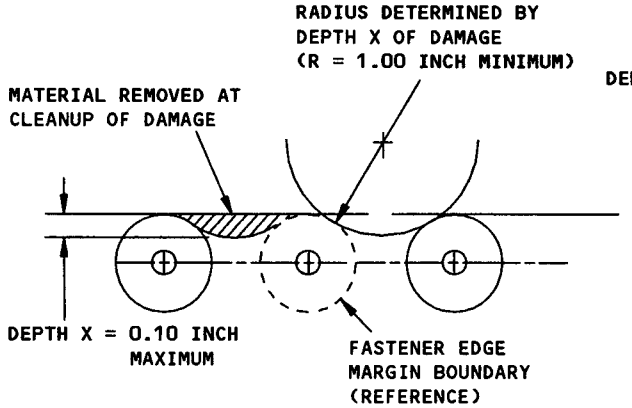

DAMAGE CLEANUP OF EDGES WHERE FASTENER EDGE MARGINS DO NOT OVERLAP

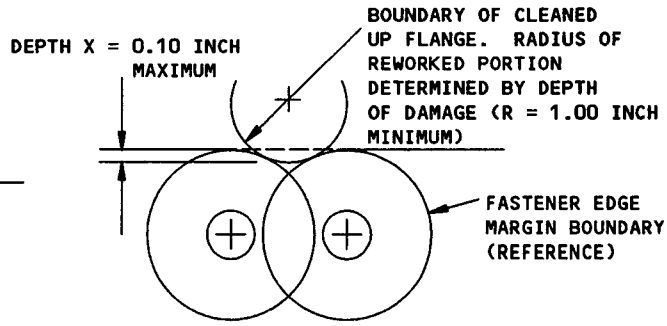

DAMAGE CLEANUP OF EDGES WHERE FASTENER EDGE MARGINS OVERLAP

DETAIL II

Spoiler Fitting Allowable Damage (Graphite Composite Spoiler)
Figure 14 (Sheet 2)

BOEING PROPRIETARY - Copyright © - Unpublished Work - See title page for details.

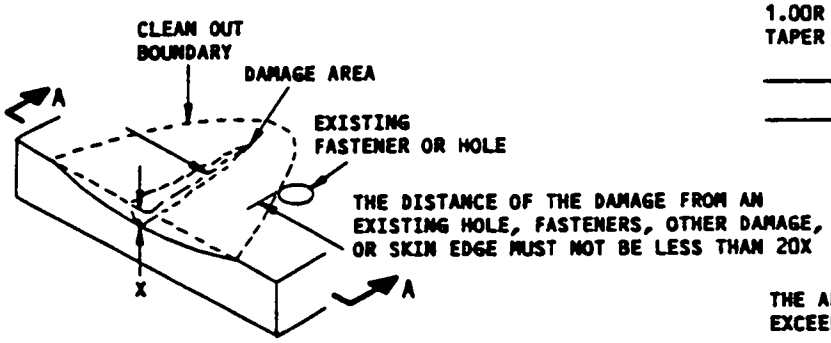

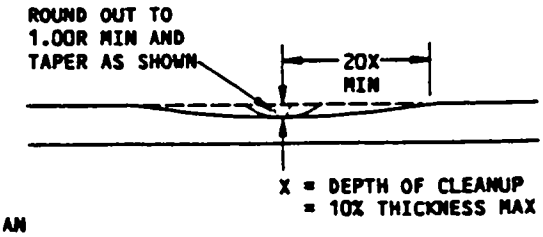

SECTION A-A

THE AREA REMOVED FOR CLEANUP MUST NOT EXCEED 10% OF THE CROSS SECTIONAL AREA

REMOVAL OF NICK, GOUGE, SCRATCH, AND CORROSION DAMAGE ON A SURFACE
DETAIL III

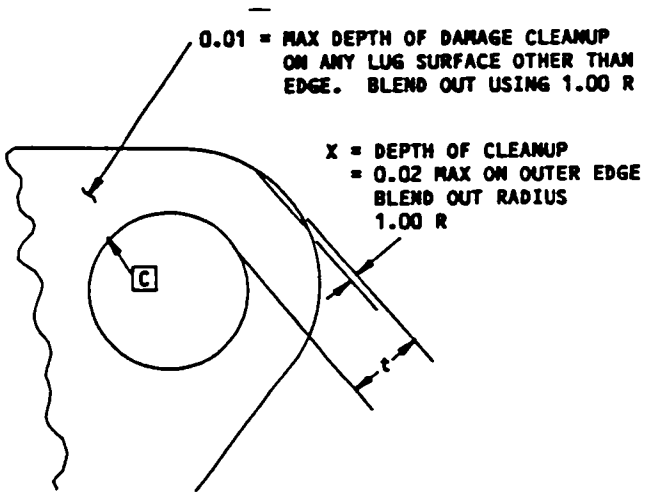

DAMAGE CLEANUP FOR LUG
DETAIL IV

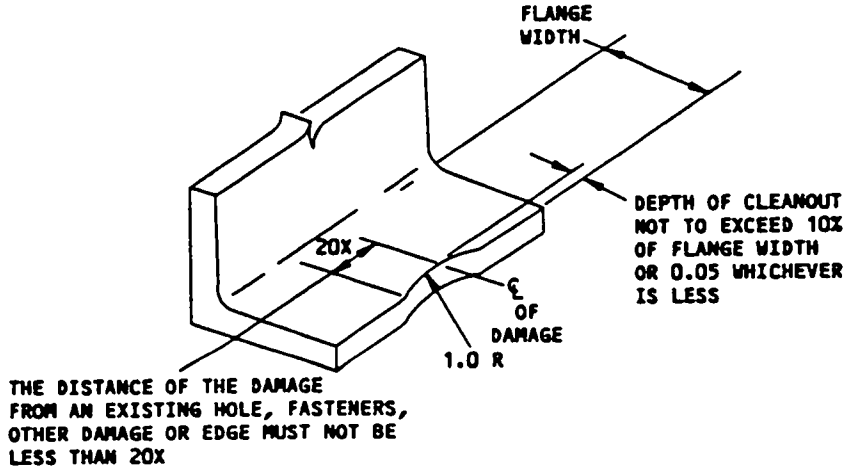

REMOVAL OF EDGE DAMAGE FROM
FREE FLANGE WITHOUT FASTENERS
DETAIL V

Spoiler Fitting Allowable Damage (Graphite Composite Spoiler)
Figure 14 (Sheet 3)

141815

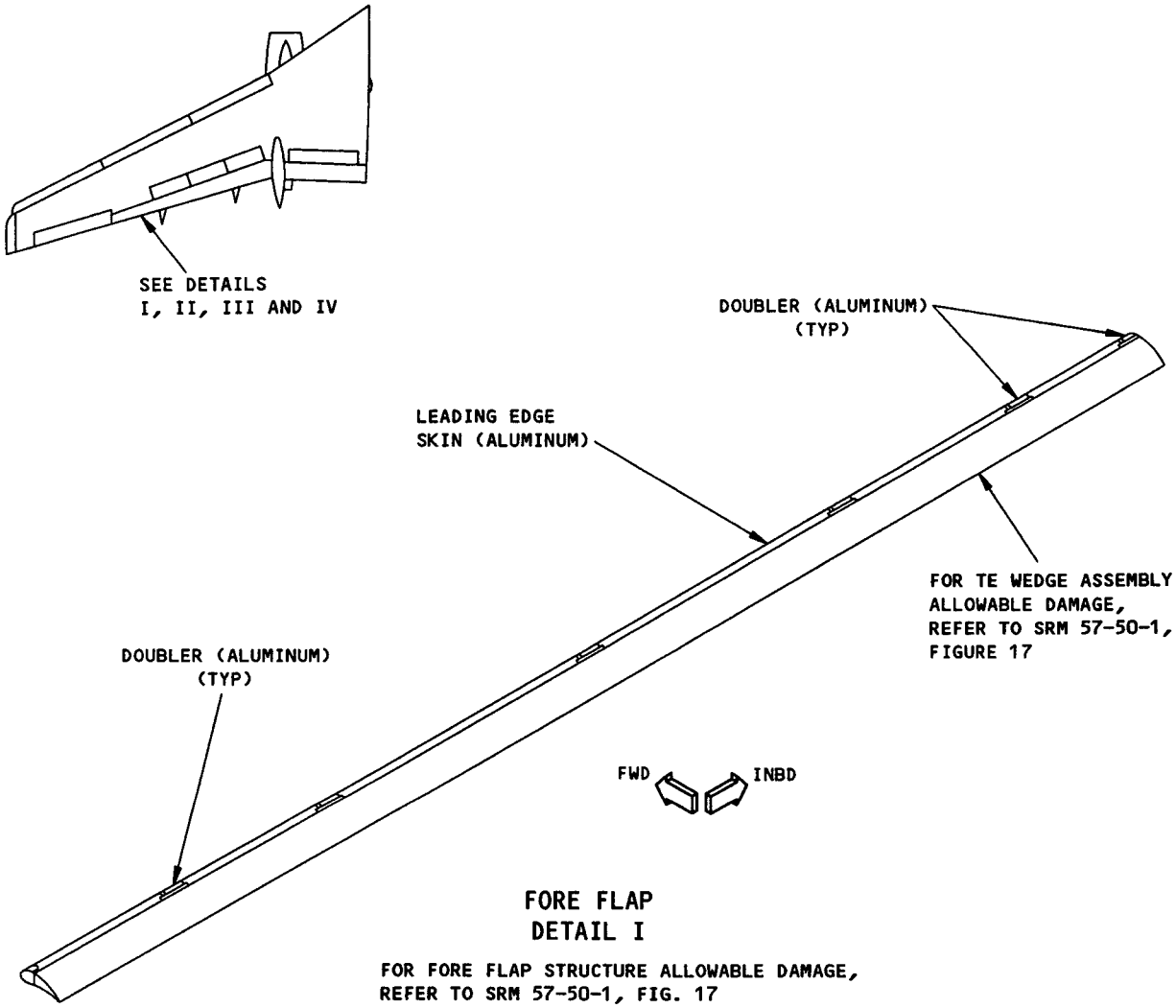

Wing Outboard Trailing Edge Flap Skin Allowable Damage
Figure 15 (Sheet 1)

BOEING PROPRIETARY - Copyright © - Unpublished Work - See title page for details.

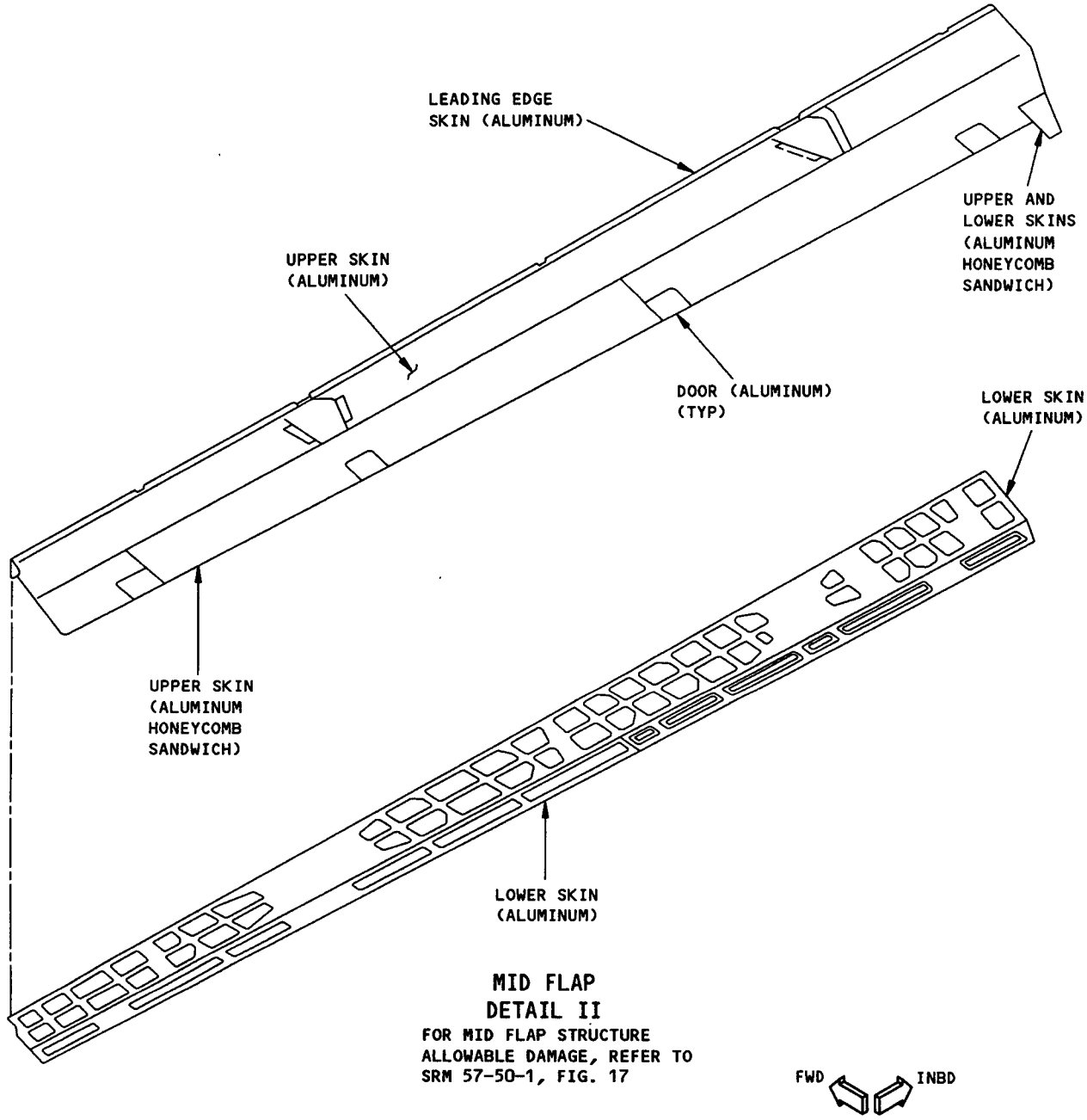

Wing Outboard Trailing Edge Flap Skin Allowable Damage
Figure 15 (Sheet 2)

BOEING PROPRIETARY - Copyright © - Unpublished Work - See title page for details.

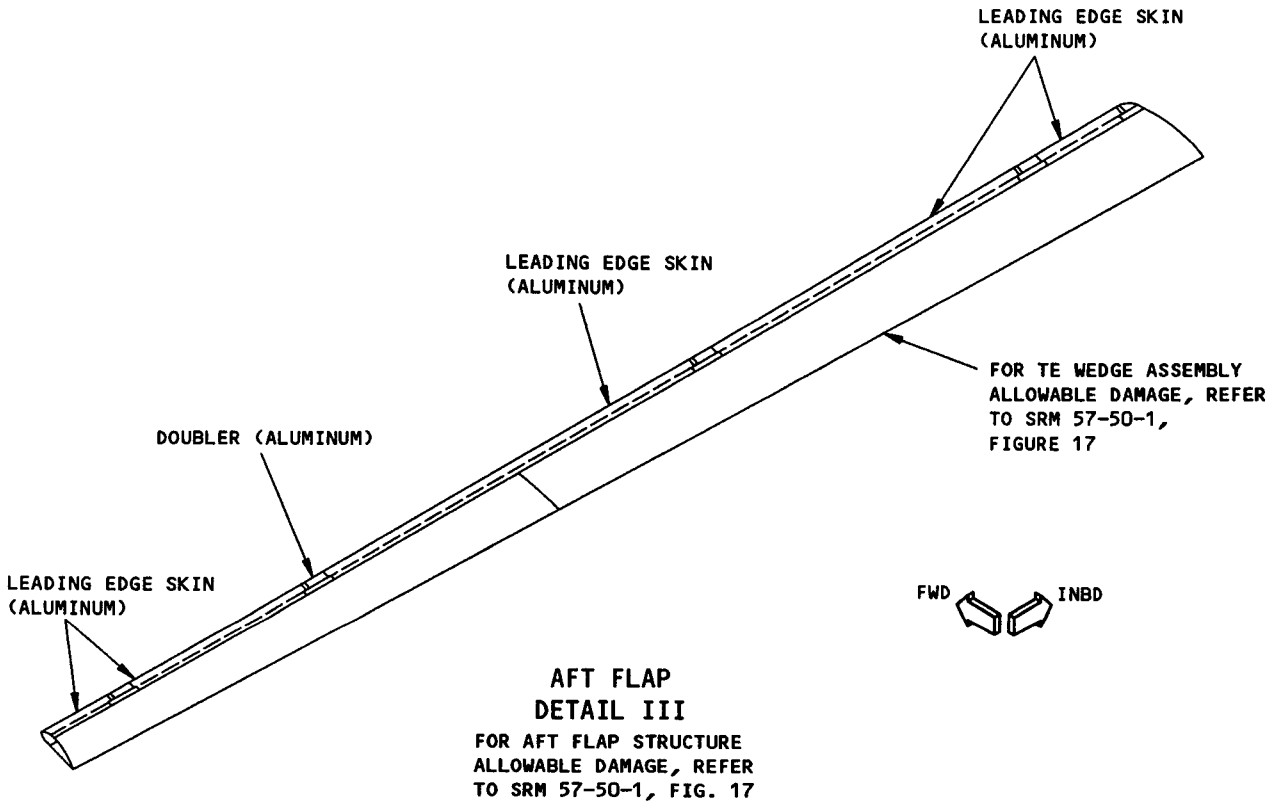

Wing Outboard Trailing Edge Flap Skin Allowable Damage
Figure 15 (Sheet 3)

BOEING PROPRIETARY - Copyright © - Unpublished Work - See title page for details.

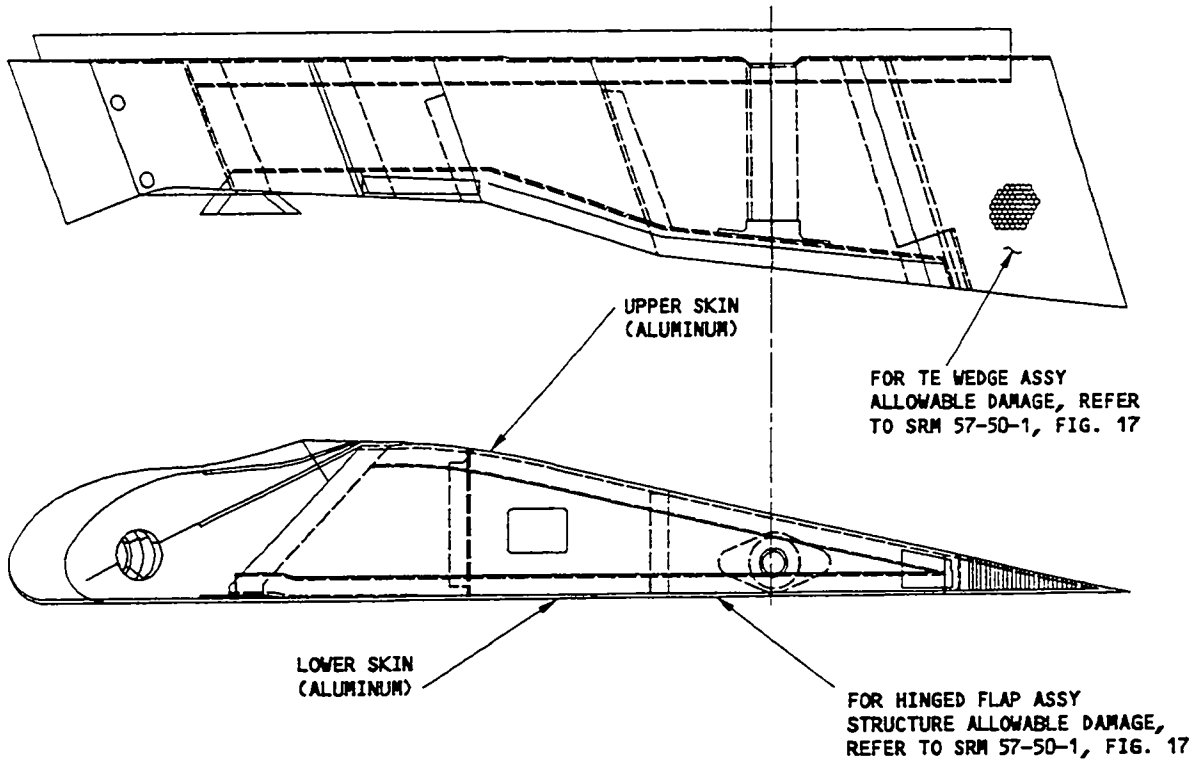

HINGED FLAP ASSEMBLY
DETAIL IV

Wing Outboard Trailing Edge Flap Skin Allowable Damage
Figure 15 (Sheet 4)

DESCRIPTION	CRACKS	NICKS, GOUGES, SCRATCHES AND CORROSION	DENTS	HOLES AND PUNCTURES	DELAMINATION
NOSE SKINS, LEADING EDGE SKINS, UPPER AND LOWER SKINS, DOUBLERS, AND COVER SKINS	A	B	C	D	----
UPPER AND LOWER SKIN PANELS (ALUMINUM HONEY-COMB SANDWICH)	Q	Q	Q	Q	Q

ALLOWABLE DAMAGE FOR DETAILS I,II,III,IV
TABLE I

NOTES

- THESE ALLOWABLE DAMAGE LIMITS GIVEN IN THIS FIGURE WILL NOT HAVE AN EFFECT ON A STRUCTURALLY SIGNIFICANT ITEM (SSI) GIVEN IN SRM 51-00-4, FIG. 3. THUS, NO CHANGE TO THE SUPPLEMENTAL STRUCTURAL INSPECTION DOCUMENT (SSID) INSPECTION PROGRAM IS NECESSARY.
- THESE ALLOWABLE DAMAGE LIMITS HAVE FAA APPROVAL IF THE INSPECTIONS SHOWN IN THIS FIGURE ARE COMPLETED AT THE SPECIFIED TIMES
- ALL DIMENSIONS ARE IN INCHES UNLESS GIVEN DIFFERENTLY
- REFER TO AMM 51-21 FOR PROTECTIVE FINISH TREATMENT OF REPAIRED AREAS
- REFER TO SRM 51-10-1 FOR DAMAGE CLASSIFICATION
- REFER TO SRM 51-10-2 FOR PROTECTIVE TREATMENT OF METAL REPAIR PARTS. APPLY A CHEMICAL CONVERSION COATING TO BARE ALUMINUM SURFACES
- REFER TO SRM 51-10-6 FOR CORROSION DAMAGE CLEANUP
- REFER TO SRM 51-30-6 FOR FASTENER EDGE MARGINS
- REFER TO SRM 51-70 FOR AERODYNAMIC SMOOTHNESS REQUIREMENTS
- NICKS, GOUGES, AND SCRATCHES THAT DO NOT GO ALL THE WAY THROUGH CLAD SURFACES CAN BE IGNORED. MAKE AN INSPECTION OF THE DEPTH OF PENETRATION AS SHOWN IN SRM 51-10-1
- KEEP RECORDS OF THE LOCATION OF ALL ALLOWABLE DAMAGE THAT IS NOT REPAIRED. MAKE AN INSPECTION FREQUENTLY AND DO PERMANENT REPAIRS IMMEDIATELY IF THE DAMAGE BECOMES LARGER

A CRACKS ARE NOT PERMITTED.

B REMOVE NICKS, GOUGES, SCRATCHES, AND CORROSION AS SHOWN IN DETAILS V, VI, VIII AND IX.

C DENTS ARE PERMITTED AS SHOWN IN DETAIL VIII. DENTS THAT ARE LARGER THAN THE LIMITS GIVEN DETAIL VII MUST BE FILLED WITH POTTING COMPOUND. REFER TO SRM 51-40-1. FILL ORREPAIR DENTS THAT ARE SMALLER THAN THE LIMITS GIVEN IN DETAIL VII, BUT SHOW ONE OR MORE OF THE CONDITIONS THAT FOLLOW:

- THE DISTANCE BETWEEN DENTS THAT ARE NOT FILLED IS LESS THAN HALF OF THE MAXIMUM DIMENSIONS OF THE LARGER DAMAGED AREA
- THE DISTANCE BETWEEN A DENT THAT IS NOT FILLED AND A DIFFERENT LOCATION OF DAMAGE IS LESS THAN HALF OF THE MAXIMUM DIMENSION OF THE LARGER DAMAGED AREA
- THE DEPTH (Y) OF A DENT THAT IS NOT FILLED IS LARGER THAN 0.10

D HOLES AND PUNCTURES ARE NOT PERMITTED

Wing Outboard Trailing Edge Flap Skin Allowable Damage
Figure 15 (Sheet 5)

BOEING PROPRIETARY - Copyright © - Unpublished Work - See title page for details.

NOTES (CONT)

[E] IF DELAMINATION IS DETECTED AT DENT LOCATION, TREAT AS DELAMINATION ALSO (WITH RESPECT TO ALLOWABLE DAMAGE SIZE AND INTERIM MEASURES).

[F] DENTS ARE NOT PERMITTED WHERE PANEL ATTACHES TO UNDERLYING STRUCTURE (SUCH AS RIBS).

[G] THESE RESTRICTIONS APPLY TO THOSE AREAS CONTAINED WITHIN THE BOUNDARY OF A 2-INCH STRIP ALONG THE PANEL EDGES, THE TRAILING EDGE AND AFT OF THE SPAR.

[H] EACH DELAMINATED AREA MUST BE CONTAINED WITHIN A 3.0-INCH DIAMETER CIRCLE. DAMAGE MUST BE GREATER THAN 4 TIMES THE MAXIMUM DAMAGE DIMENSION FROM ANY OTHER DAMAGE.

[I] THE DISTANCE BETWEEN ADJACENT UNFILLED SURFACE DENTS MUST BE GREATER THAN 1/2 MAXIMUM DIMENSION OF THE LARGER DENTED AREA.

[J] CHECK ESPECIALLY FOR DELAMINATION AROUND ALL DAMAGE, ALONG PANEL EDGES, NEAR FITTINGS, AROUND POTTED AREAS, AND AROUND ATTACHMENT POINTS TO UNDERLYING STRUCTURE.

[K] DENTS ARE PERMITTED AS SHOWN IN DETAIL X AND TABLE II. DENTS THAT ARE LARGER THAN THE LIMITS GIVEN IN DETAIL X OR TABLE II MUST BE FILLED WITH POTTING COMPOUND. REFER TO SRM 51-40-1. FILL OR REPAIR DENTS THAT ARE SMALLER THAN THE LIMITS GIVEN IN DETAIL X AND TABLE II, BUT SHOW ONE OR MORE OF THE CONDITIONS THAT FOLLOW:

- THE DISTANCE BETWEEN DENTS THAT ARE NOT FILLED IS LESS THAN HALF OF THE MAXIMUM DIMENSION OF THE LARGER DAMAGED AREA
- THE DISTANCE BETWEEN A DENT THAT IS NOT FILLED AND A DIFFERENT LOCATION OF DAMAGE IS LESS THAN HALF OF THE MAXIMUM DIMENSION OF THE LARGER DAMAGED AREA
- THE DEPTH (Y) OF A DENT THAT IS NOT FILLED IS LARGER THAN 0.10

[L] SCRATCHES MAY BE ORIENTED IN ANY DIRECTION. SCRATCHES WITHIN THE LIMITS DO NOT REQUIRE REWORK PROVIDED NO TWO INTERSECT AND PROVIDED NO SCRATCH IS WITHIN 2.00 OF AN EDGE, FITTING, POTTED AREA, OR ATTACHMENT POINTS TO UNDERLYING STRUCTURE. IF NOT, CLEAN UP THE DAMAGE AS SHOWN IN DETAIL VI.

[M] CLEAN UP CRACKS AT OR NEAR EDGES AS SHOWN IN DETAILS XI AND XII. FOR OTHER CRACKS:

- STOP DRILL THE CRACKS. REFER TO SRM 51-10-1
- DO THE PROCEDURES IN [N].

REPAIR THE DAMAGE NO MORE THAN 150 FLIGHT HOURS AFTER THE CRACKS ARE STOP DRILLED.

[N] IT IS RECOMMENDED TO REMOVE MOISTURE FROM THE DAMAGED AREA. USE VACUUM AND HEAT (A MAXIMUM OF 150°F [66°C]) TO REMOVE THAT MOISTURE. CLEAN THE DAMAGED AREA. SEAL THE DAMAGED AREA WITH ALUMINUM FOIL TAPE (SPEED TAPE) 3M-Y436 OR AN EQUIVALENT. DO NOT USE SPEED TAPE AT THESE SKIN LOCATIONS:

- 3 INCHES ON EACH SIDE OF THE CENTERLINE ALONG THE FITTINGS OR THE FOREFLAP TRACK IN THE FOREFLAP
- 3 INCHES ON EACH SIDE OF THE CENTERLINE ALONG THE PUSHROD ATTACHMENT OR ROLLER SUPPORTS IN THE AFT FLAP
- 2 INCHES AFT OF THE SPAR IN THE FOREFLAP AND THE AFT FLAP.

KEEP A RECORD OF THE LOCATION WHERE THE SPEED TAPE IS INSTALLED. REMOVE THE SPEED TAPE TO MAKE AN INSPECTION OF THE LOCATION EACH 150 FLIGHT HOURS AFTER THE TAPE IS APPLIED. REPLACE THE TAPE IF IT STARTS TO COME OFF OR DETERIORATION IS FOUND. IF THE DAMAGE BECOMES LARGER, INSTALL A PERMANENT REPAIR. THE DAMAGE MUST BE REPAIRED NO LATER THAN THE SUBSEQUENT "C" CHECK.

[O] CLEAN UP HOLES AND PUNCTURES AT OR NEAR EDGES AS SHOWN IN DETAILS XI AND XII. CUT THE FACE SKIN AROUND ALL OTHER HOLES AND PUNCTURES TO A SMOOTH CIRCULAR OR OVAL SHAPE. [N]

[P] CLEAN UP DAMAGE AS SHOWN IN DETAILS XI AND XII. INSTALL PERMANENT REPAIR WITHIN 150 FLIGHT HOURS.

[Q] SEE TABLE II.

[R] TYPICAL DAMAGE TO A PANEL EDGE MAY CONSIST OF EDGE CRUSHING, CRACKS OR DELAMINATION. DAMAGE AROUND HOLES MAY CONSIST OF OVALIZATION, FASTENER PULL-THROUGH OR CRACKS OUT OF HOLE. DAMAGE MAY REDUCE THE EFFECTIVE CROSS SECTIONAL AREA OF AN EDGE. DAMAGE TO EDGES SHOULD BE BLENDED OUT TO LIMITATIONS GIVEN FOR COMPONENT. CUMULATIVE LENGTH OF BLENDOUT FOR EACH PANEL EDGE MUST NOT EXCEED 15% OF EDGE LENGTH.

[S] MIX, APPLY, AND CURE AS GIVEN IN THE MANUFACTURERS INSTRUCTIONS.

[T] REFER TO THE IDENTIFICATION SECTION FOR APPLICABLE EFFECTIVITIES.

Wing Outboard Trailing Edge Flap Skin Allowable Damage
Figure 15 (Sheet 6)

BOEING PROPRIETARY - Copyright © - Unpublished Work - See title page for details.

NOTES (CONT)

[U] CLEAN UP THE DAMAGE AS SHOWN IN DETAILS XI AND XII. [N]

[V] EDGE DAMAGE IS PERMITTED UP TO:

- A LENGTH OF 1.0 INCH AND A DEPTH OF 1.0 INCH FOR THE FOREFLAP
- A LENGTH OF 2.0 INCHES AND A DEPTH OF 1.5 INCHES FOR THE AFT FLAP.

[V] (CONT)

EDGE DAMAGE CAN BE SEALED AS FOLLOWS:

- APPLY ONE LAYER OF SPEED TAPE WHICH EXTENDS OUT 2 INCHES ALL AROUND THE DAMAGE
- APPLY A SECOND LAYER OF SPEED TAPE WHICH EXTENDS OUT 1 INCH ALL AROUND THE EDGES OF THE FIRST LAYER OF SPEED TAPE. [N]

THESE DAMAGE LOCATIONS MUST BE A MINIMUM OF 10 TIMES THE LENGTH OF DAMAGE (EDGE TO EDGE) FROM THE NEAREST HOLE OR OTHER DAMAGE LOCATIONS.

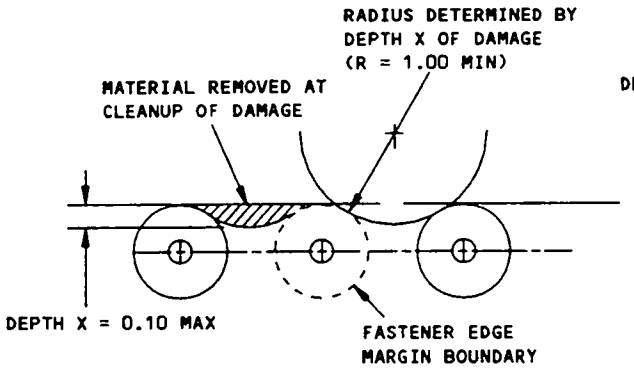

DAMAGE CLEANUP OF EDGES WHERE FASTENER EDGE MARGINS DO NOT OVERLAP

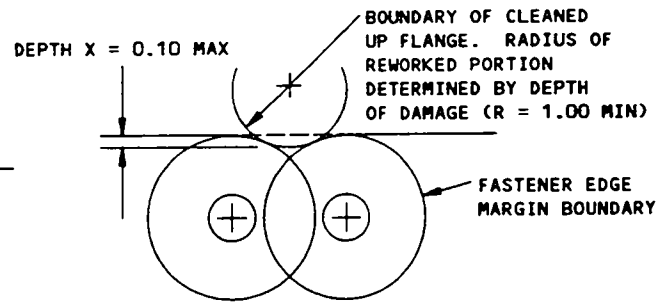

DAMAGE CLEANUP OF EDGES WHERE FASTENER EDGE MARGINS OVERLAP

DETAIL V

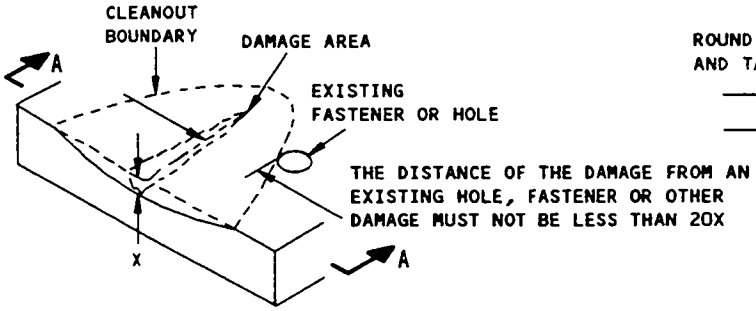

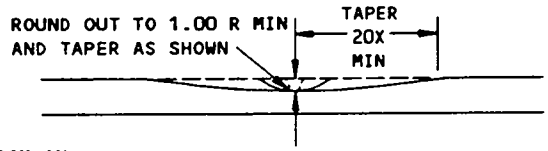

X = MAXIMUM DEPTH OF CLEANUP
- FOR THE MID-FLAP LEADING EDGE SKIN, X = 35% OF THE LOCAL THICKNESS
- FOR ALL OTHER METAL SKINS, X = 20% OF THE LOCAL THICKNESS
- FOR HONEYCOMB AREAS, SEE TABLE II.

SECTION A-A

REMOVAL OF NICK, GOUGE, CORROSION AND SCRATCH DAMAGE ON A SURFACE
(DAMAGE AT EDGE SHOWN; DAMAGE AWAY FROM EDGE SIMILAR)
DETAIL VI

Wing Outboard Trailing Edge Flap Skin Allowable Damage
Figure 15 (Sheet 7)

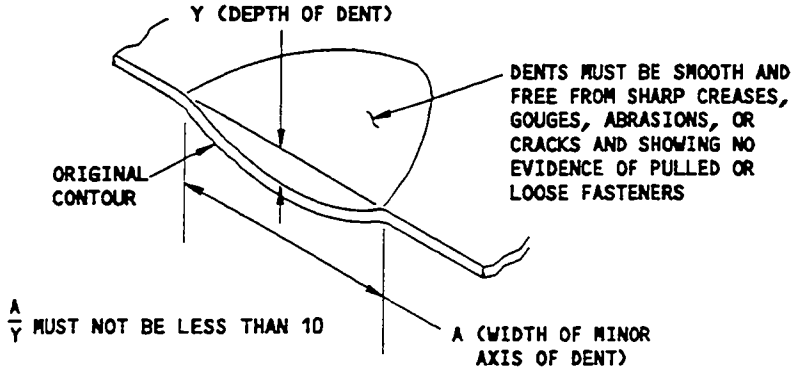

ALLOWABLE DAMAGE FOR DENT
DETAIL VII

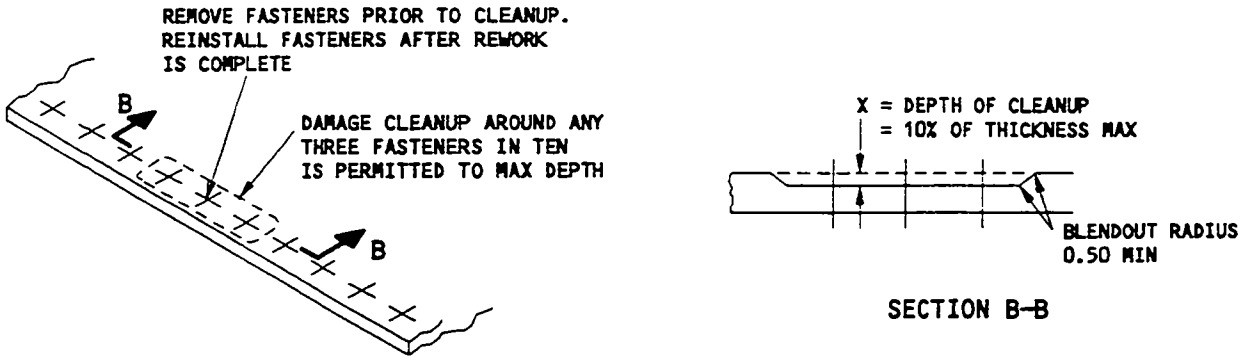

SECTION B-B

DAMAGE CLEANUP
DETAIL VIII

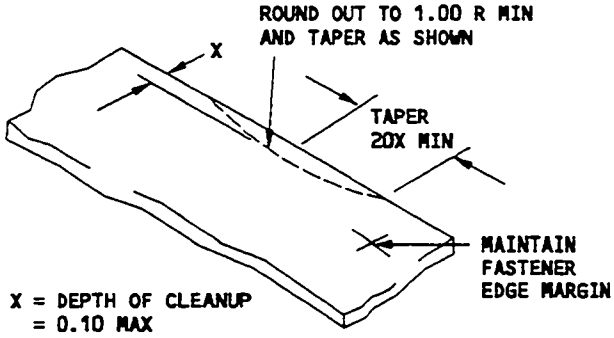

REMOVAL OF DAMAGE ON AN EDGE
DETAIL IX

Wing Outboard Trailing Edge Flap Skin Allowable Damage
Figure 15 (Sheet 8)

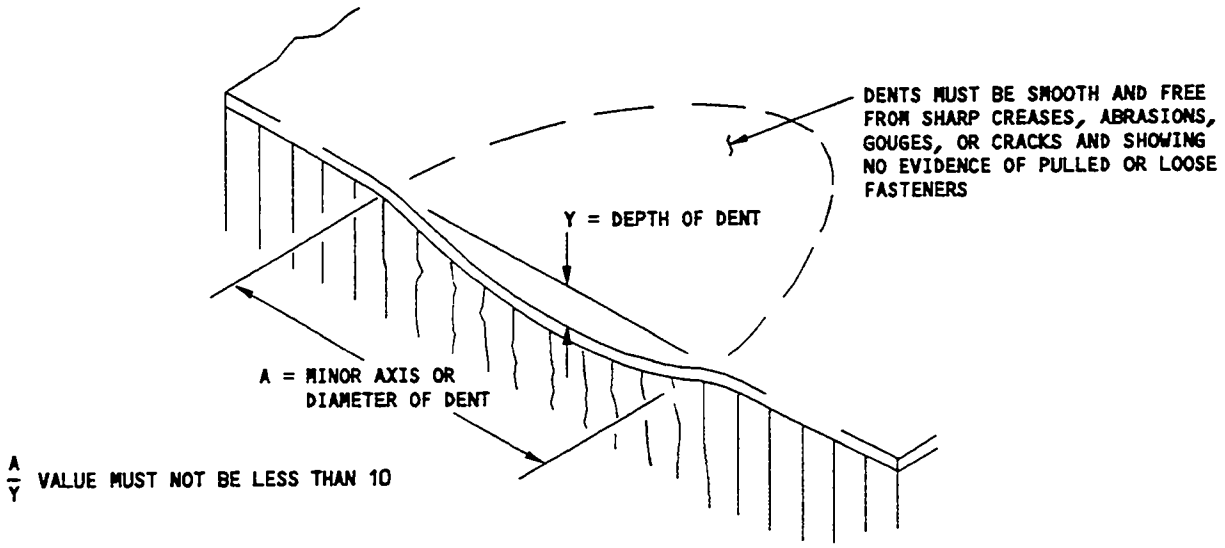

PROFILE OF PERMISSIBLE DENTS ON ALUMINUM HONEYCOMB PANELS
DETAIL X

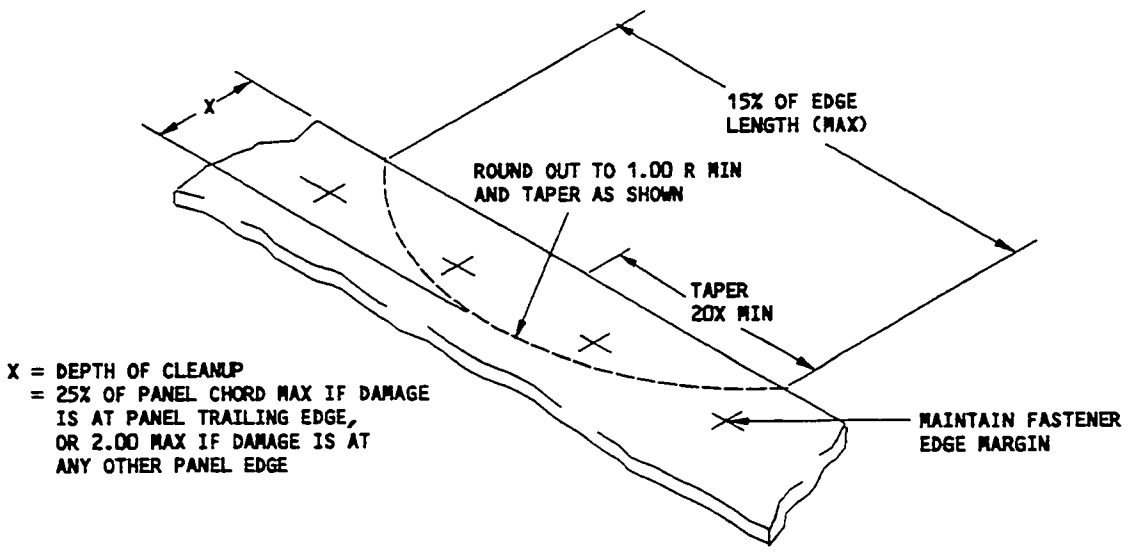

REMOVAL OF DAMAGE ON AN EDGE OF HONEYCOMB PANEL
DETAIL XI

Wing Outboard Trailing Edge Flap Skin Allowable Damage
Figure 15 (Sheet 9)

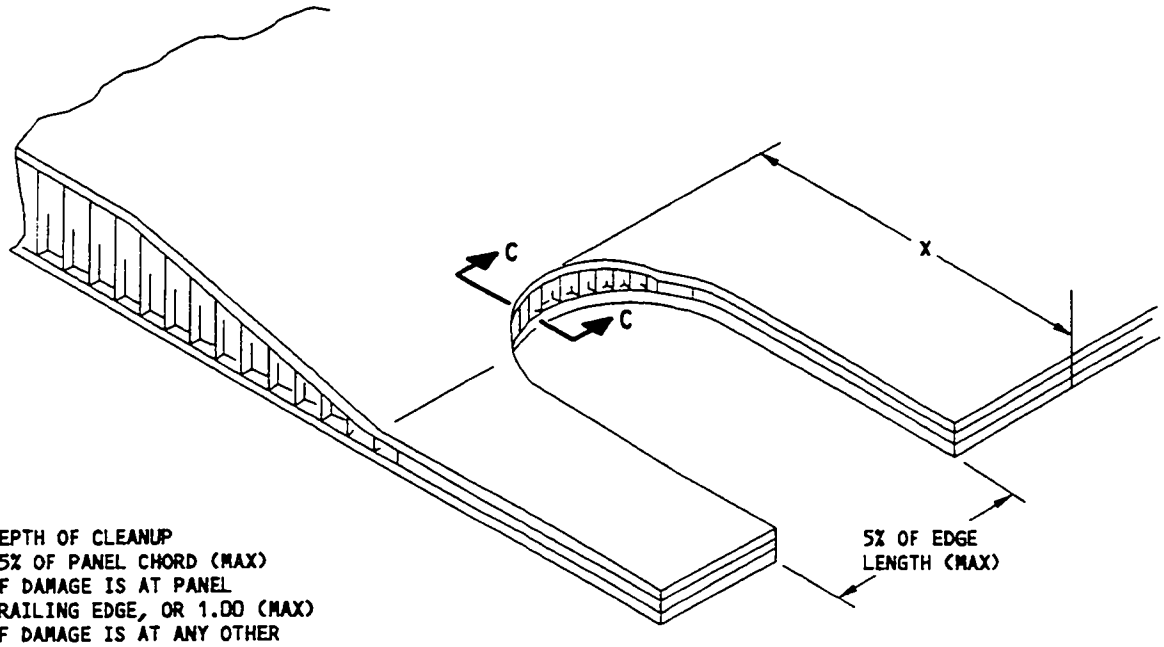

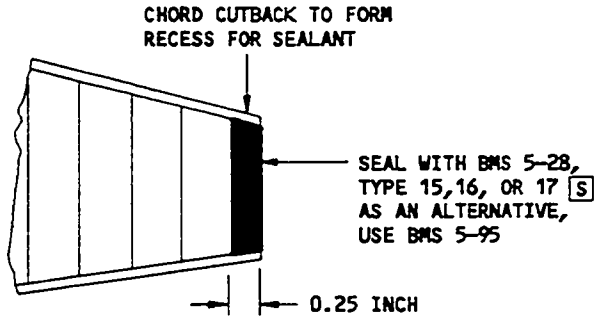

SECTION C-C

DAMAGE CLEANUP ON AN EDGE OF HONEYCOMB PANEL
DETAIL XII

Wing Outboard Trailing Edge Flap Skin Allowable Damage
Figure 15 (Sheet 10)

E74525

TYPE OF DAMAGE	NONHONEYCOMB SURFACES OTHER THAN EDGEBANDS	PANEL EDGES OTHER THAN TRAILING EDGE	TRAILING EDGE	FACE SHEET SURFACES OVER CORE
DENTS [I] [K]	[C] [E] [F]	NONE	25% PANEL CHORD, 15% SPAN [P] [E]	25% PANEL CHORD (MAX. DIMENSION) SEE DETAIL X [E]
DELAMINATION [J]	[H]	[U] REFER TO [P]	[V] REFER TO [P]	MAX. SIZE OF ANY SINGLE DELAMINATED AREA = 35 IN^2. 25% CHORD MAX. DIMENSION IN ANY DIRECTION
NICKS, GOUGES, SCRATCHES, AND CORROSION	[B]	NONE WITHIN 2.00 OF EDGE [G] AND 1.50 OF FASTENERS [P]	NONE WITHIN 2.00 OF EDGE [G] AND 1.50 OF FASTENERS [P]	25% SKIN THICKNESS, 25% SKIN CHORD (MAX. DIMENSION) REFER TO [L]
CRACKS	[A]	NONE [G] REFER TO [M]	NONE [G] REFER TO [V]	15% PANEL CHORD (MAX. LENGTH) REFER TO [M]
HOLES AND PUNCTURES	[D]	NONE [G] REFER TO [O]	NONE [G] REFER TO [O]	15% PANEL CHORD (MAX. DIMENSION) REFER TO [O]

ALLOWABLE DAMAGE FOR HONEYCOMB PANELS [R]
TABLE II

Wing Outboard Trailing Edge Flap Skin Allowable Damage
Figure 15 (Sheet 11)

BOEING PROPRIETARY - Copyright © - Unpublished Work - See title page for details.

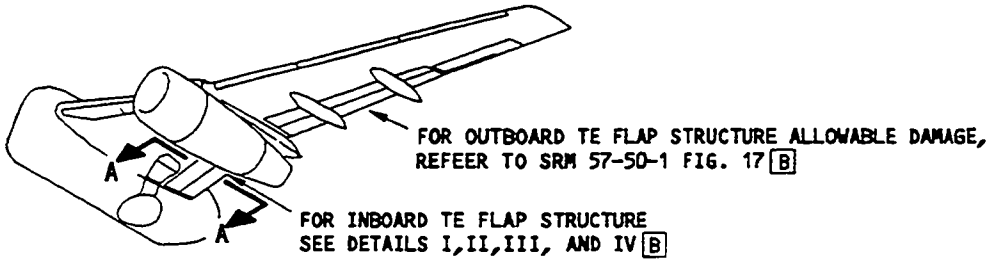

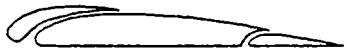

FLAP CROSS SECTION

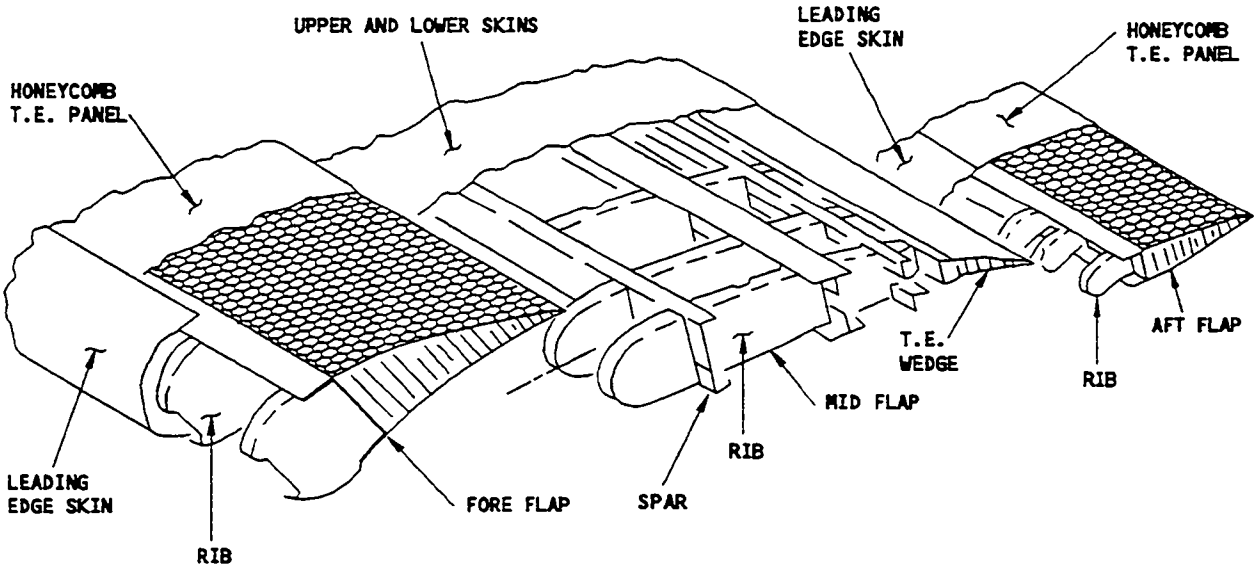

TYPICAL SECTION - WING TRAILING EDGE FLAPS
SECTION A-A

Wing Inboard Trailing Edge Flap Structure Allowable Damage
Figure 16 (Sheet 1)

E74414

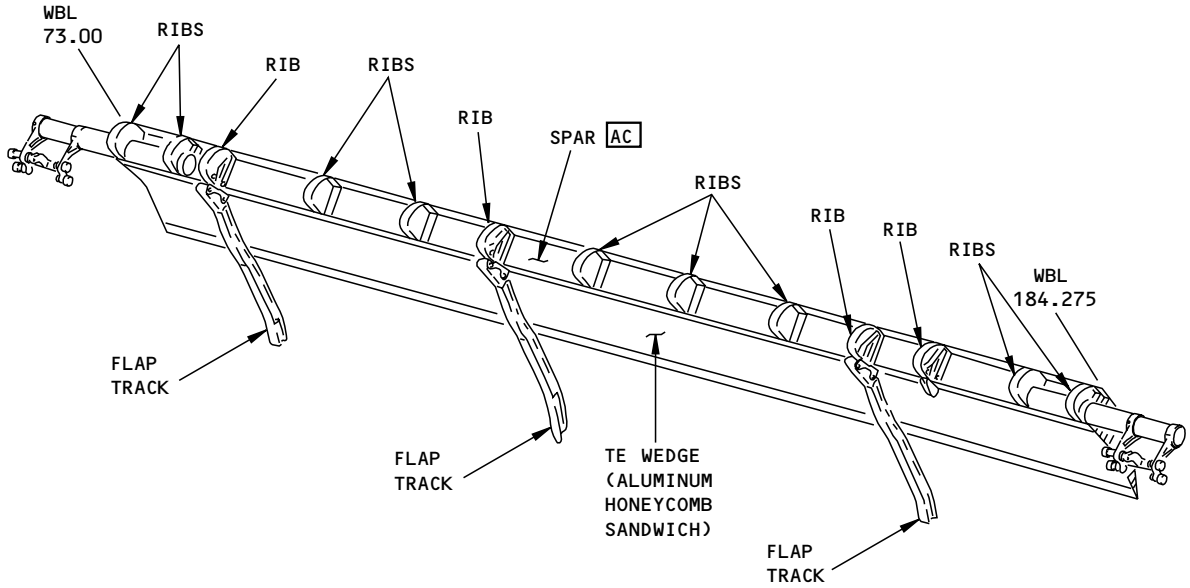

FOREFLAP
DETAIL I

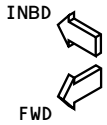

MATERIAL: ALUMINUM

LOCATION	CRACKS	NICKS, GOUGES, SCRATCHES AND CORROSION	DENTS	PUNCTURES AND HOLES	DELAMINATION
RIBS	C	E W	F	S	----
TE WEDGE	Q AE	Q AE	Q AE	Q AE	Q AE

ALLOWABLE DAMAGE FOR DETAIL I
TABLE I

Wing Inboard Trailing Edge Flap Structure Allowable Damage
Figure 16 (Sheet 2)

E74424

BOEING PROPRIETARY - Copyright © - Unpublished Work - See title page for details.

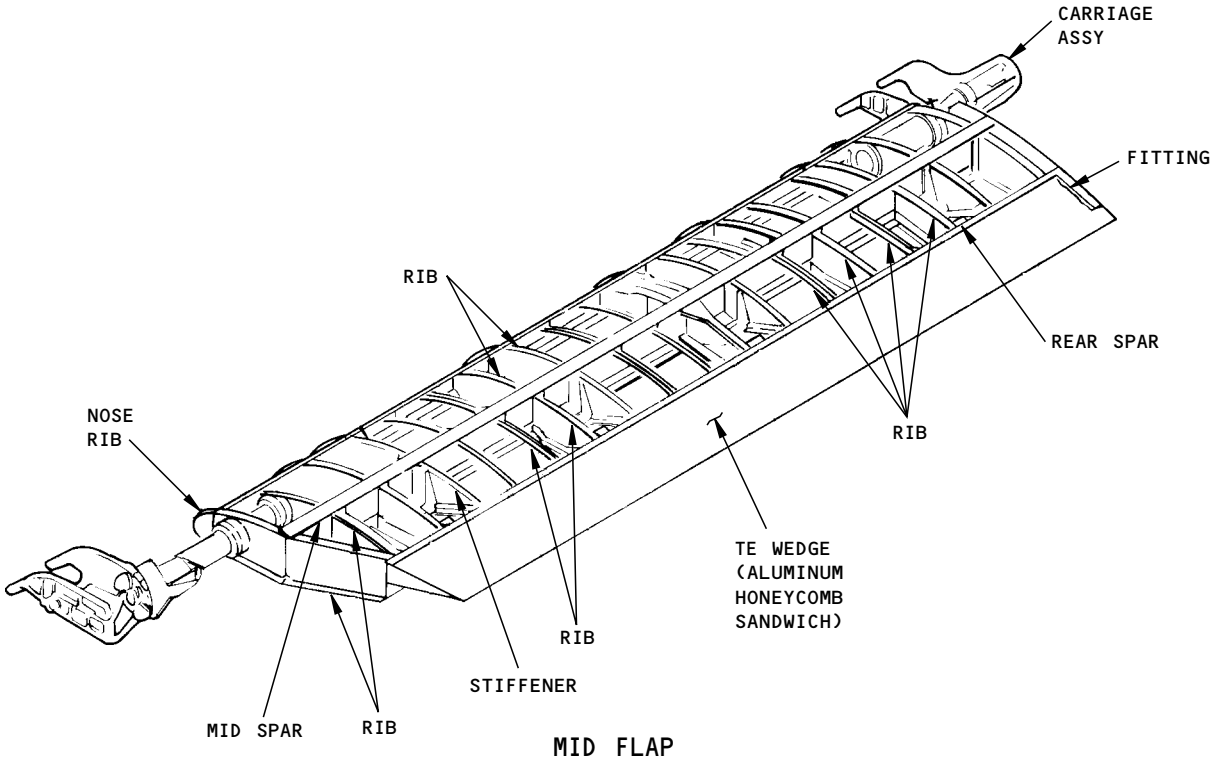

MID FLAP
DETAIL II

MATERIAL: ALUMINUM, EXCEPT AS NOTED

LOCATION	CRACKS	NICKS, GOUGES, SCRATCHES AND CORROSION	DENTS	PUNCTURES AND HOLES	DELAMINATION
NOSE RIBS	C	E W	F	S	----
RIBS CHORDS	C	E	NOT PERMITTED	NOT PERMITTED	
WEBS	X	E W	F	S	----
RIBS (FORGED OR MACHINED)	C	E W	NOT PERMITTED	NOT PERMITTED	
SPARS CHORDS	C	E	NOT PERMITTED	NOT PERMITTED	
WEBS	X	E W	F	S	----
TE WEDGE (ALUMINUM HONEYCOMB SANDWICH)	Q AE	Q AE	Q AE	Q AE	Q AE
STIFFENERS	C	E	F	Y	----

ALLOWABLE DAMAGE FOR DETAIL II
TABLE II

Wing Inboard Trailing Edge Flap Structure Allowable Damage
Figure 16 (Sheet 3)

E74429

BOEING PROPRIETARY - Copyright © - Unpublished Work - See title page for details.

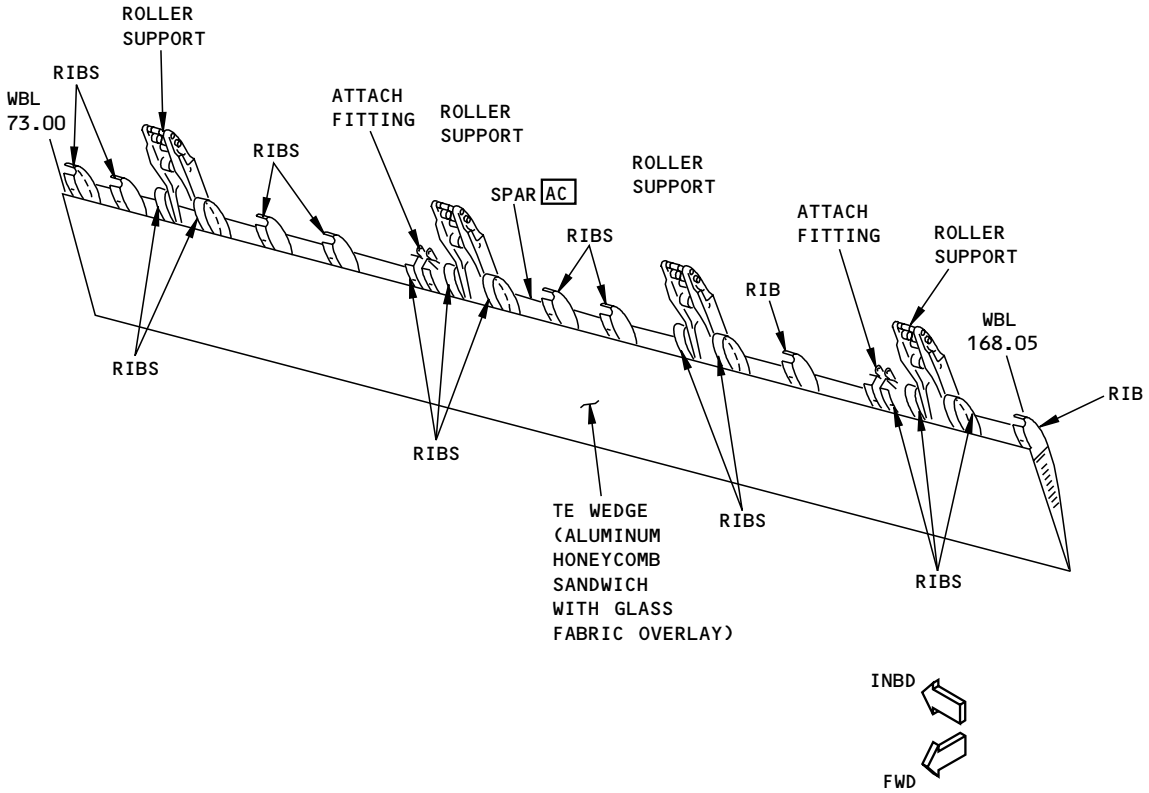

AFT FLAP
DETAIL III

LOCATION	CRACKS	NICKS, GOUGES, SCRATCHES AND CORROSION	DENTS	PUNCTURES AND HOLES	DELAMINATION
RIBS	C	E W	F	S	----
ROLLER SUPPORT	X	T	NOT PERMITTED	NOT PERMITTED	----
TE WEDGE (ALUMINUM HONEYCOMB SANDWICH)	Q AE	Q AE	Q AE	Q AE	Q AE
ATTACH FITTING	T	T	NOT PERMITTED	NOT PERMITTED	----

ALLOWABLE DAMAGE FOR DETAIL III
TABLE III

Wing Inboard Trailing Edge Flap Structure Allowable Damage
Figure 16 (Sheet 4)

E74433

BOEING PROPRIETARY - Copyright © - Unpublished Work - See title page for details.

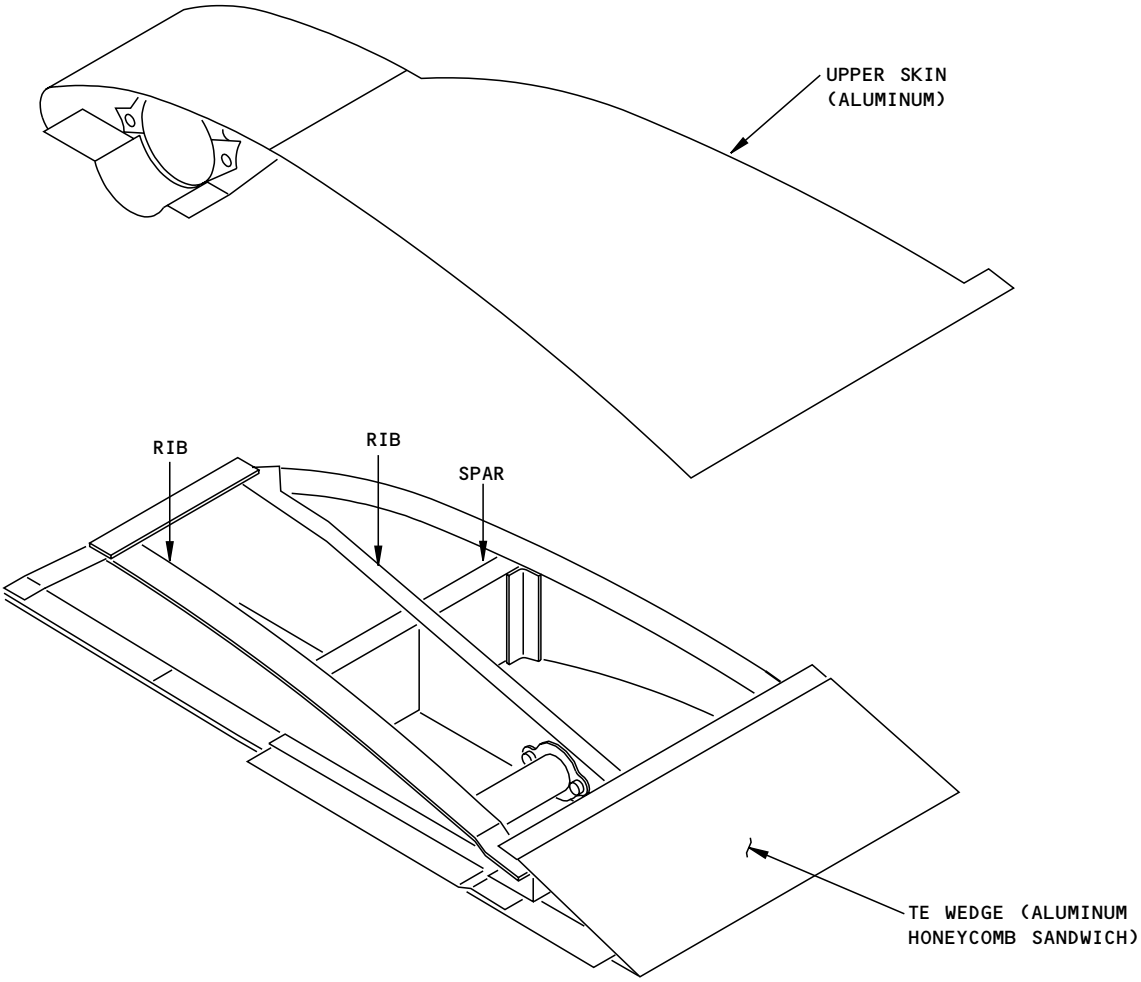

FLIPPER FLAP
DETAIL IV

MATERIAL: ALUMINUM

LOCATION	CRACKS	NICKS, GOUGES, SCRATCHES AND CORROSION	DENTS	PUNCTURES AND HOLES	DELAMINATION
RIBS	C	E W	F	S	----
SPAR WEB	X	E W	F	S	----
TE WEDGE (ALUMINUM HONEYCOMB SANDWICH)	Q AE	Q AE	Q AE	Q AE	Q AE
SPAR CHORD	C	E	NOT PERMITTED	NOT PERMITTED	----

ALLOWABLE DAMAGE FOR DETAIL IV
TABLE IV

Wing Inboard Trailing Edge Flap Structure Allowable Damage
Figure 16 (Sheet 5)

E74439

BOEING PROPRIETARY - Copyright © - Unpublished Work - See title page for details.

NOTES

- THE ALLOWABLE DAMAGE LIMITS GIVEN IN THIS FIGURE WILL NOT HAVE AN EFFECT ON A STRUCTURALLY SIGNIFICANT ITEM (SSI) GIVEN IN SRM 51-00-4, FIG. 3. THUS, NO CHANGE TO THE SUPPLEMENTAL STRUCTURAL INSPECTION DOCUMENT (SSID) INSPECTION PROGRAM IS NECESSARY.
- ALL DIMENSIONS ARE IN INCHES UNLESS GIVEN DIFFERENTLY.
- THESE ALLOWABLE DAMAGE LIMITS HAVE FAA APPROVAL IF THE INSPECTIONS SHOWN IN THIS FIGURE ARE COMPLETED AT THE SPECIFIED TIMES.
- REFER TO AMM 51-21 FOR PROTECTIVE FINISH TREATMENT OF REPAIRED AREAS.
- REFER TO SRM 51-10-1 FOR DAMAGE CLASSIFICATION.
- REFER TO SRM 51-10-2 FOR PROTECTIVE TREATMENT OF METAL REPAIR PARTS. APPLY A CHEMICAL CONVERSION COATING TO BARE ALUMINUM SURFACES.
- REFER TO SRM 51-10-6 FOR CORROSION DAMAGE CLEANUP.
- REFER TO SRM 51-30-6 FOR FASTENER EDGE MARGINS.
- REFER TO SRM 51-70 FOR AERODYNAMIC SMOOTHNESS.
- FOR REWORKED STEEL SURFACES, CADMIUM PLATE AS SHOWN IN SOPM 20-42-10 OF THE STANDARD OVERHAUL PRACTICES, DOCUMENT D6-51702. REFER TO AMM 51-21 AND APPLY TWO COATS OF BMS 10-11, TYPE I PRIMER.
- NICKS, GOUGES, AND SCRATCHES THAT DO NOT GO ALL THE WAY THROUGH CLAD SURFACES CAN BE IGNORED. MAKE AN INSPECTION OF THE DEPTH OF PENETRATION AS SHOWN IN SRM 51-10-1.
- KEEP RECORDS OF THE LOCATION OF ALL ALLOWABLE DAMAGE THAT IS NOT REPAIRED. MAKE AN INSPECTION FREQUENTLY AND DO PERMANENT REPAIRS IMMEDIATELY IF THE DAMAGE BECOMES LARGER.

[A] IT IS RECOMMENDED TO REMOVE MOISTURE FROM THE DAMAGED AREA. USE VACUUM AND HEAT (A MAXIMUM OF 150°F (66°C) TO REMOVE THAT MOISTURE. CLEAN THE DAMAGED AREA. SEAL THE DAMAGED AREA WITH ALUMINUM FOIL TAPE (SPEED TAPE) 3M-Y436 OR AN EQUIVALENT. DO NOT USE SPEED TAPE AT THESE CRITICAL LOCATIONS

- 3 INCHES ON EACH SIDE OF THE CENTERLINE ALONG THE FITTINGS OR THE FOREFLAP TRACK IN THE FOREFLAP.
- 3 INCHES ON EACH SIDE OF THE CENTERLINE ALONG THE PUSHROD ATTACHMENT OR ROLLER SUPPORTS IN THE AFT FLAP.
- 2 INCHES AFT OF THE SPAR IN THE FOREFLAP AND THE AFT FLAP.

KEEP A RECORD OF THE LOCATION WHERE SPEED TAPE IS INSTALLED. REMOVE THE SPEED TAPE TO MAKE AN INSPECTION OF THE LOCATION EACH 150 FLIGHT HOURS AFTER THE TAPE IS APPLIED. REPLACE THE TAPE IF IT STARTS TO COME OFF OR DETERIORATION IS FOUND. IF THE DAMAGE BECOMES LARGER, INSTALL A PERMANENT REPAIR. THE DAMAGE MUST BE REPAIRED AT OR BEFORE THE SUSEQUENT "C" CHECK.

[B] REFER TO SRM 57-50-1, FIG. 3 FOR TE FLAP SKIN.

[C] CRACKS ARE NOT PERMITTED EXCEPT FOR EDGE CRACKS WHICH MUST BE REMOVED AS SHOWN IN DETAILS VI,X,XI,XII, AND XIII.

[D] MIX, APPLY, AND CURE AS SHOWN IN MANUFACTURERS INSTRUCTIONS.

[E] REMOVE NICKS, GOUGES, SCRATCHES, AND CORROSION AS SHOWN IN DETAILS VI,VII,IX,X, XI,XII, AND XIII.

[F] DENTS ARE PERMITTED AS SHOWN IN DETAIL VIII, IF THE DEPTH OF THE DENT (Y) IS NOT LARGER THAN 0.125 INCH.

[G] THESE RESTRICTIONS APPLY TO THE UPPER AND LOWER CHORDS, THE HONEYCOMB CORE BETWEEN THE UPPER AND LOWER CHORDS, AND THOSE AREAS CONTAINED WITHIN THE BOUNDARY OF A 2-INCH STRIP ALONG THE TRAILING EDGE, ALONG THE EDGES AT THE ENDS OF THE FLAPS, AND ALONG THE AREA JUST AFT OF THE UPPER AND LOWER CHORDS.

[H] CLEAN UP DAMAGE AS SHOWN IN DETAIL XV. INSTALL PERMANENT REPAIR WITHIN 150 FLIGHT HOURS.

[I] THE DISTANCE BETWEEN ADJACENT UNFILLED SURFACE DENTS MUST BE GREATER THAN 1/2 MAXIMUM DIMENSION OF THE LARGER DENTED AREA.

[J] CHECK ESPECIALLY FOR DELAMINATION AROUND ALL DAMAGE, IN CRITICAL AREAS, NEAR FITTINGS AND SPARS, AND IN THE AREA NEAR UPPER AND LOWER CHORDS. DISTANCE BETWEEN ADJACENT ALLOWABLE DELAMINATED AREAS MUST BE GREATER THAN 1/2 MAXIMUM DIMENSION OF THE LARGER DELAMINATED AREA.

Wing Inboard Trailing Edge Flap Structure Allowable Damage
Figure 16 (Sheet 6)

BOEING PROPRIETARY - Copyright © - Unpublished Work - See title page for details.

NOTES (CONT)

K AS AN INTERIM MEASURE, CLEAN UP DAMAGE AT OR NEAR EDGES AS SHOWN IN DETAILS XII AND XV. INSTALL PERMANENT REPAIR WITHIN 150 FLIGHT HOURS

L AS AN INTERIM MEASURE, CLEAN UP CRACKS AT OR NEAR EDGES AS SHOWN IN DETAILS XII AND XV. AS AN INTERIM MEASURE FOR OTHER CRACKS, STOP DRILL CRACKS AS SHOWN IN SRM 51-10-1. REFER TO NOTE A. INSTALL PERMANENT REPAIR WITHIN 150 SUBSEQUENT FLIGHT HOURS.

M AS AN INTERIM MEASURE, CLEAN UP HOLES AND PUNCTURES NEAR EDGES AS SHOWN IN DETAIL XV. INSTALL A PERMANENT REPAIR WITHIN 150 SUBSEQUENT FLIGHT HOURS. AS AN INTERIM MEASURE FOR OTHER HOLES AND PUNCTURES, CUT FACE SKIN AROUND HOLES AND PUNCTURES TO A SMOOTH CIRCULAR OR OVAL SHAPE AND REFER TO NOTE A.

N CLEAN UP DAMAGE AS SHOWN IN DETAIL VII

O SCRATCHES MAY BE ORIENTED IN ANY DIRECTION. SCRATCHES WITHIN THE LIMITS DO NOT REQUIRE REWORK IF NO TWO INTERSECT AND NO SCRATCH IS WITHIN 2.00 OF AN EDGE, UPPER CHORD, LOWER CHORD, TRACK, OR SUPPORT FITTING. IF NOT, CLEAN UP DAMAGE AS SHOWN IN DETAIL VII

P MAXIMUM DIMENSIONS MAY BE ORIENTED IN ANY DIRECTION. DAMAGE BOUNDARY MAY BE OF ANY SHAPE PROVIDED MAXIMUM DIMENSIONS ARE NOT EXCEEDED. CIRCULAR BOUNDARY USED TO INDICATE MAXIMUM DIMENSION OF DAMAGE

Q SEE TABLE V

R SEE DETAIL XVII

S HOLES AND PUNCTURES ARE PERMITTED UP TO 0.25 MAX DIA AFTER CLEANUP PROVIDED DAMAGE IS 2.0 MIN FROM ANY OTHER HOLE, PART EDGE, OR OTHER DAMAGE. CLEAN UP DAMAGE AND FILL WITH A 2117-T3 OR 2117-T4 ALUMINUM PROTRUDING HEAD RIVET INSTALLED WET WITH BMS 5-95 SEALANT

T NOT PERMITTED EXCEPT FOR LUG DAMAGE WHICH MUST BE REMOVED AS SHOWN IN DETAIL V

U DAMAGE IS NOT PERMITTED WITHIN 0.02 OF BUSHING

V DENTS ARE PERMITTED AS SHOWN IN DETAIL XIV AND TABLE V DENTS. THAT ARE LARGER THAN THE LIMITS GIVEN IN DETAIL XIV OR TABLE V MUST BE FILLED WITH POTTING COMPOUND. REFER TO SRM 51-40-1. FILL OR REPAIR DENTS THAT ARE SMALLER THAN THE LIMITS GIVEN IN DETAIL XIV AND TABLE V, BUT SHOW ONE OR MORE OF THE CONDITIONS THAT FOLLOW:

- THE DISTANCE BETWEEN DENTS THAT ARE NOT FILLED IS LESS THAN HALF OF THE MAXIMUM DIMENSION OF THE LARGER DAMAGED AREA
- THE DISTANCE BETWEEN A DENT THAT IS NOT FILLED AND A DIFFERENT LOCATION OF DAMAGE IS LESS THAN HALF OF THE MAXIMUM DIMENSION OF THE LARGER DAMAGED AREA
- THE DEPTH (Y) OF A DENT THAT IS NOT FILLED IS LARGER THAN 0.125

W MAXIMUM ALLOWABLE CROSS SECTIONAL AREA REMOVED FROM WEB INCLUDING EXISTING HOLES AND SCRATCHES SHALL NOT EXCEED 20%

X CRACKS ARE NOT PERMITTED EXCEPT FOR EDGE CRACKS WHICH MUST BE REMOVED AS SHOWN IN DETAILS VI AND XII

Y HOLES AND PUNCTURES IN FREE FLANGE ARE PERMITTED AS SHOWN IN DETAIL XVI IN SPAR WEB STIFFENERS AND IN SKIN STIFFENERS

Z ROLLER SUPPORT ON RIB ASSY IS 4340 MOD BAR

AA DAMAGE TO THE FIBERGLASS OVERLAY IS PERMITTED IF THE FIBERGLASS IS REPLACED IN 150 FLIGHT HOURS OR LESS.

AB DAMAGE TO EDGES OF ALUMINUM HONEYCOMB TRAILING EDGE WEDGES SHOULD BE BLENDED OUT TO LIMITATIONS GIVEN, CUMULATIVE LENGTH OF BLENDOUT FOR EACH EDGE MUST NOT EXCEED 15% OF EDGE LENGTH

AC SPAR IS CONSIDERED TO BE A PART OF THE TRAILING EDGE WEDGE

AD EDGE DAMAGE IS PERMITTED UP TO:

- A LENGTH OF 1.0 INCH AND A DEPTH OF 1.0 INCH FOR THE FOREFLAP
- A LENGTH OF 2.0 INCHES AND A DEPTH OF 1.5 INCHES FOR THE AFT FLAP.

EDGE DAMAGE IS SEALED AS FOLLOWS:

- APPLY ONE LAYER OF SPEED TAPE WHICH EXTENDS OUT OF 2 INCHES ALL AROUND THE DAMAGE A.
- APPLY A SECOND LAYER OF SPEED TAPE WHICH EXTENDS OUT OF 1 INCH ALL AROUND THE EDGES OF THE FIRST LAYER OF SPEED TAPE.

THESE DAMAGE LOCATIONS MUST BE A MINIMUM OF 10 TIMES THE LENGTH OF DAMAGE (EDGE TO EDGE) FROM THE NEAREST HOLE, OTHER DAMAGE LOCATION.

AE FOR A PERMANENT REPAIR 200 SQUARE INCHES AND UNDER, REFER TO SRM 51-40-20.

Wing Inboard Trailing Edge Flap Structure Allowable Damage
Figure 16 (Sheet 7)

E74451

BOEING PROPRIETARY - Copyright © - Unpublished Work - See title page for details.

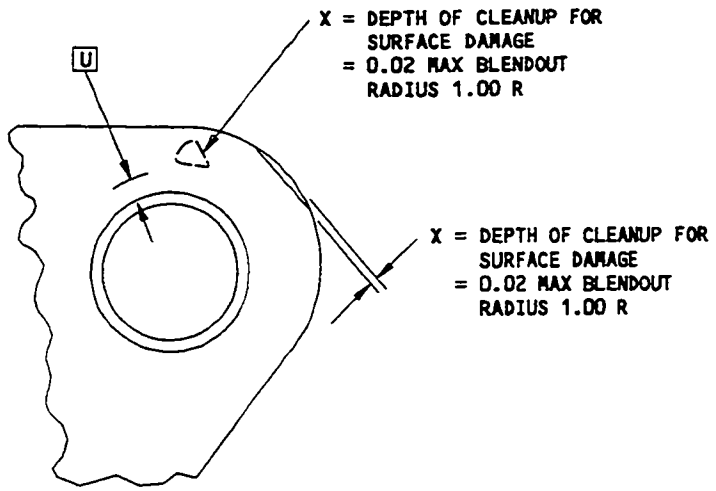

DAMAGE CLEANUP FOR LUG SURFACES
DETAIL V

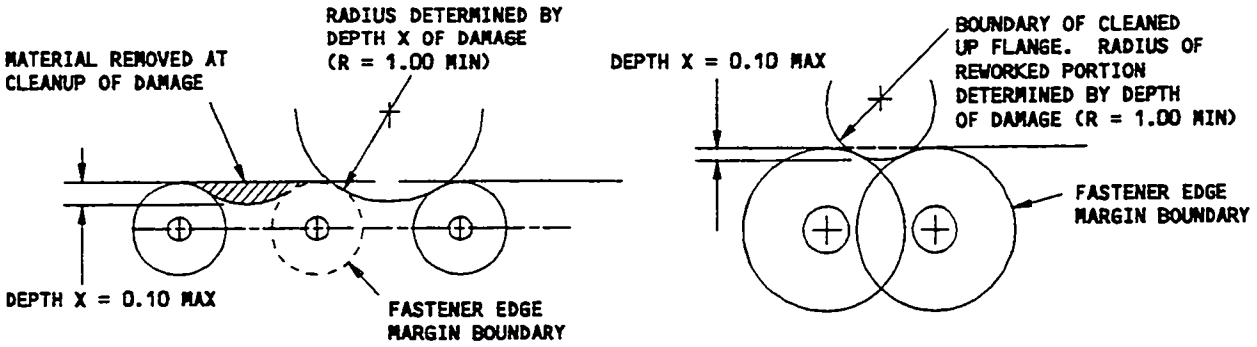

DAMAGE CLEANUP OF EDGES WHERE FASTENER EDGE MARGINS DO NOT OVERLAP

DAMAGE CLEANUP OF EDGES WHERE FASTENER EDGE MARGINS OVERLAP

DETAIL VI

Wing Inboard Trailing Edge Flap Structure Allowable Damage
Figure 16 (Sheet 8)

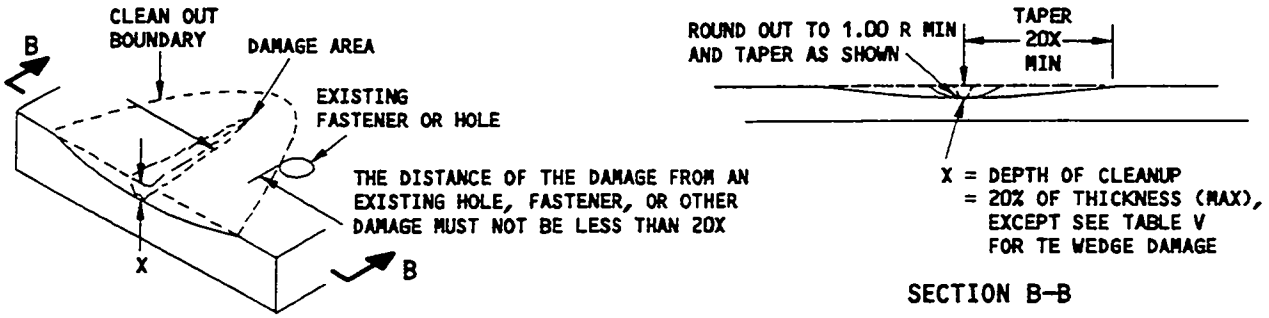

REMOVAL OF NICK, GOUGE, CORROSION, AND SCRATCH DAMAGE ON A SURFACE
(DAMAGE AT EDGE SHOWN; DAMAGE AWAY FROM EDGE SIMILAR)
DETAIL VII

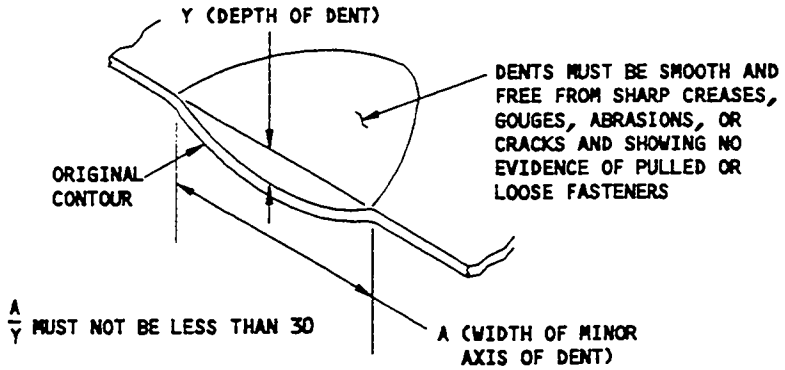

ALLOWABLE DAMAGE FOR DENT
DETAIL VIII

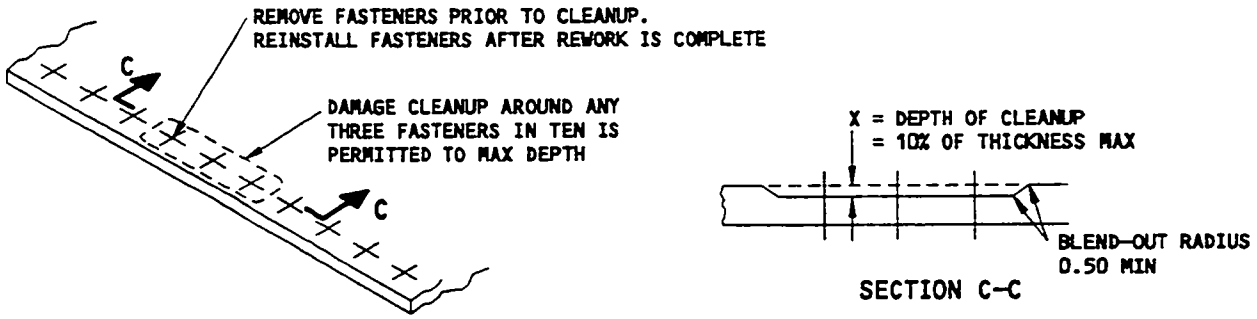

DAMAGE CLEANUP
DETAIL IX

Wing Inboard Trailing Edge Flap Structure Allowable Damage
Figure 16 (Sheet 9)

E74464

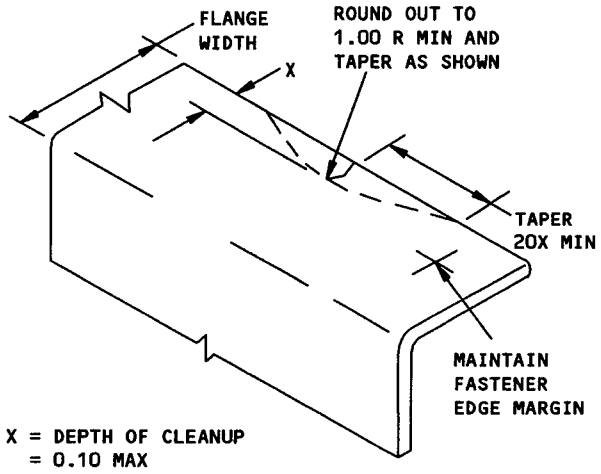

REMOVAL OF DAMAGE ON AN EDGE
DETAIL X

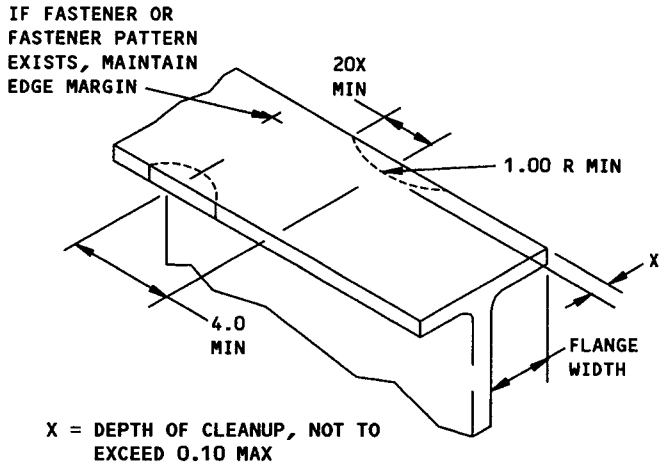

REMOVAL OF DAMAGE ON AN EDGE
DETAIL XI

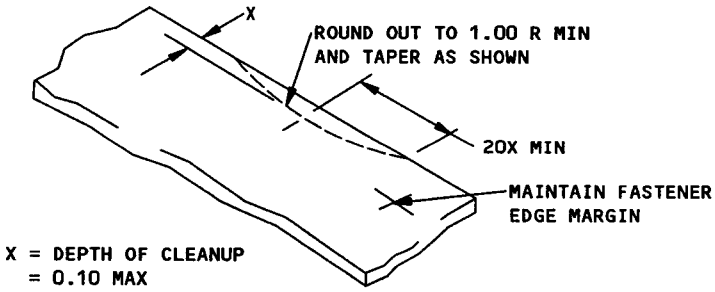

REMOVAL OF DAMAGE ON AN EDGE
DETAIL XII

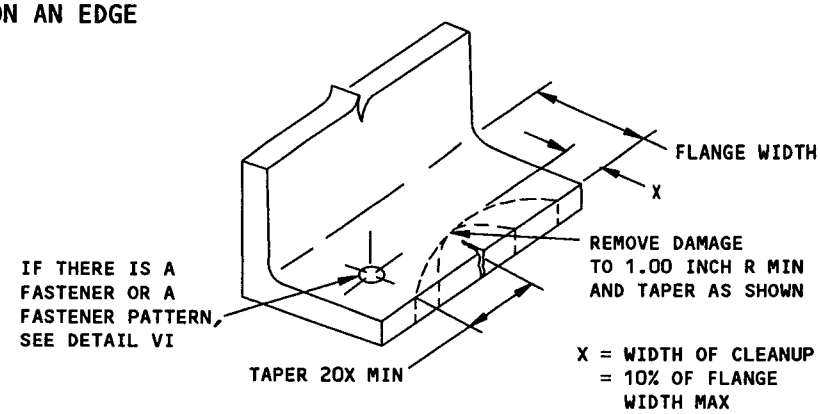

REMOVAL OF DAMAGE ON AN EDGE
DETAIL XIII

Wing Inboard Trailing Edge Flap Structure Allowable Damage
Figure 16 (Sheet 10)

BOEING PROPRIETARY - Copyright © - Unpublished Work - See title page for details.

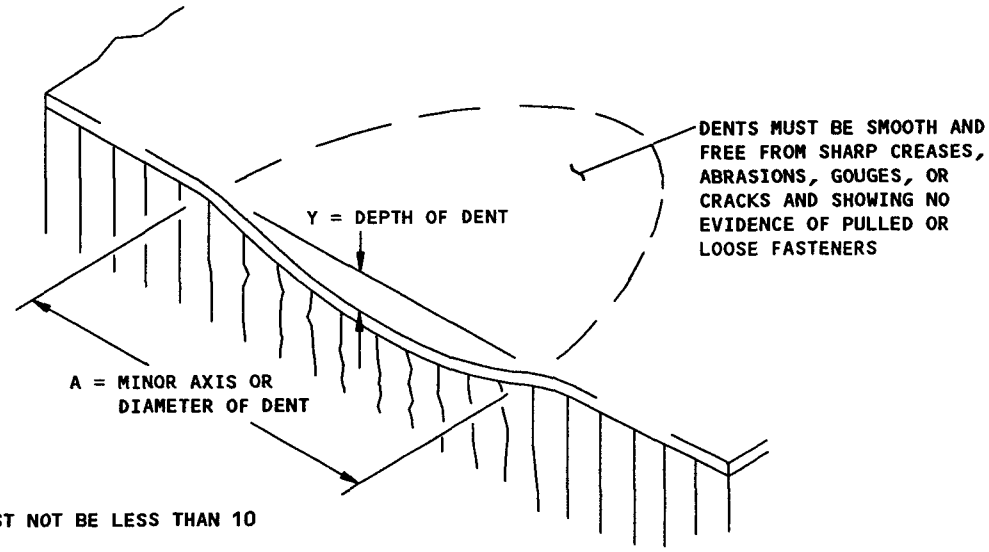

$\frac{A}{Y}$ VALUE MUST NOT BE LESS THAN 10

PROFILE OF PERMISSIBLE DENTS ON TE WEDGE (ALUMINUM HONEYCOMB)
DETAIL XIV

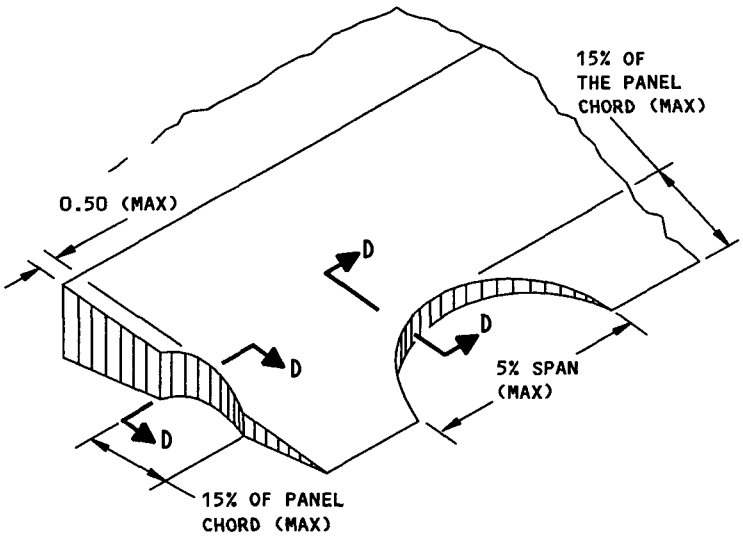

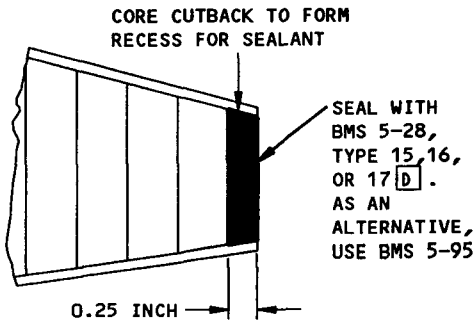

SECTION D-D

DAMAGE CLEANUP ON AFT EDGE OR SIDE EDGES OF TRAILING EDGE WEDGE
DETAIL XV

Wing Inboard Trailing Edge Flap Structure Allowable Damage
Figure 16 (Sheet 11)

BOEING PROPRIETARY - Copyright © - Unpublished Work - See title page for details.

STRUCTURAL REPAIR

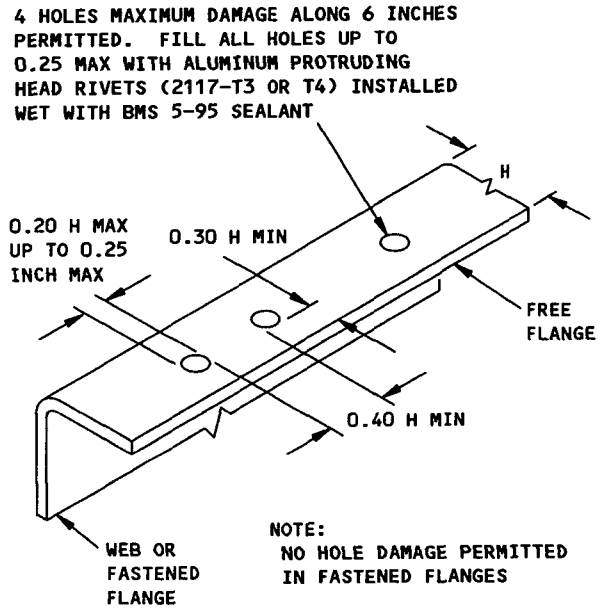

ALLOWABLE DAMAGE LIMITS FOR HOLES IN FREE FLANGE
DETAIL XVI

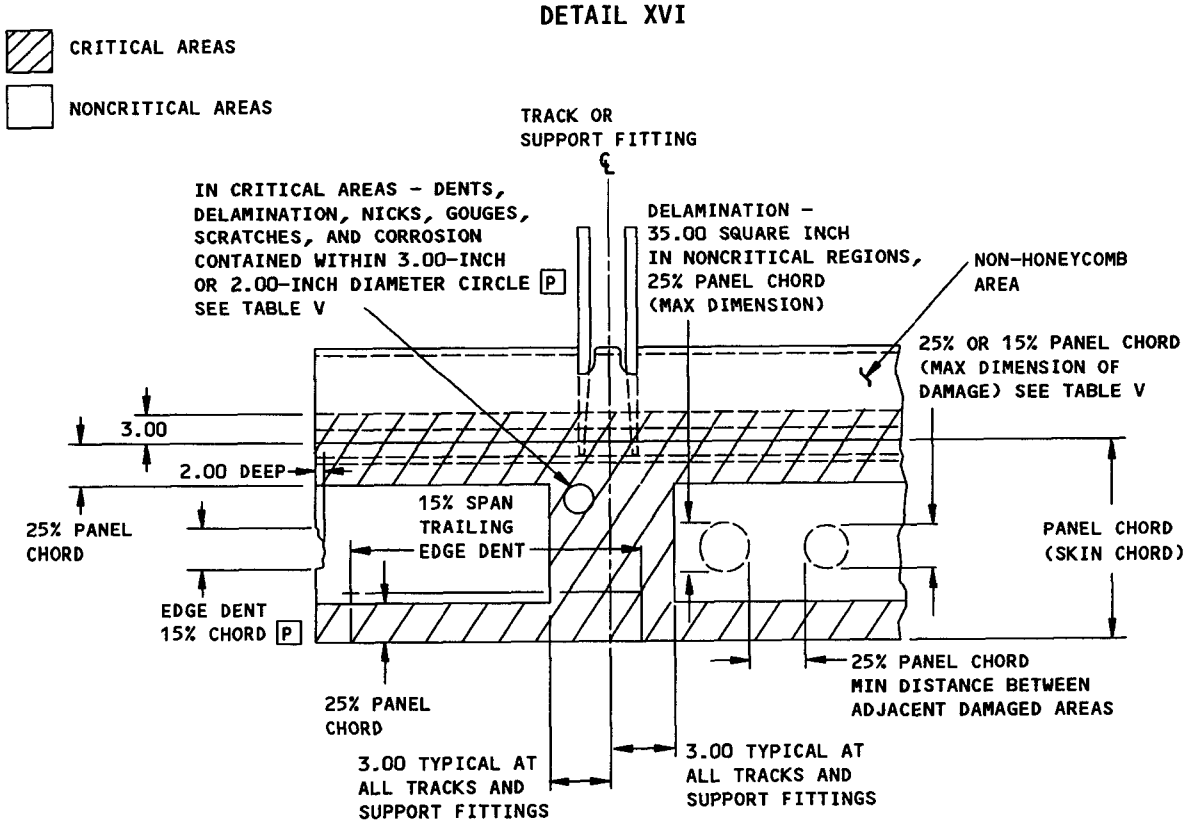

TRAILING EDGE WEDGE (ALUMINUM HONEYCOMB)
DETAIL XVII

Wing Inboard Trailing Edge Flap Structure Allowable Damage
Figure 16 (Sheet 12)

BOEING PROPRIETARY - Copyright © - Unpublished Work - See title page for details.

TYPE OF DAMAGE	TRAILING EDGE [AB]	OTHER TE WEDGE EDGES [AB]	SURFACES	
			CRITICAL AREAS	NONCRITICAL AREAS
DENTS [I] [V]	25% PANEL CHORD, 15% SPAN [H]	NONE ON FWD EDGE [G] 15% PANEL CHORD & 2.00 DEEP ON EDGES AT ENDS OF FLAPS [H]	AREA CONTAINED WITHIN 3.0-INCH DIA. CIRCLE REFER TO DETAIL XIV	25% PANEL CHORD (MAX. DIMENSION) REFER TO DETAIL XIV
DELAMINATION [J]	[H] [AD]	[H] [AD]	AREA CONTAINED WITHIN A 3.00-INCH DIA. CIRCLE	MAX. SIZE OF ANY SINGLE DELAMINATED AREA - 35 IN^2. 25% CHORD MAX. DIM. IN ANY DIRECTION
NICKS, GOUGES, SCRATCHES, AND CORROSION	NONE WITHIN 2.00 OF EDGE [G] AND 1.50 OF FASTENERS [K]	NONE WITHIN 2.00 OF EDGE [G] AND 1.50 OF FASTENERS [K]	15% SKIN THICKNESS MAX. DIM - 2.00 [N]	25% SKIN THICKNESS, 25% SKIN CHORD (MAX. DIMENSION) REFER TO NOTE [O]
CRACKS	NONE [G] [AD] REFER TO NOTE [L]	NONE [G] REFER TO NOTE [L]	NONE	15% PANEL CHORD (MAX. LENGTH) REFER TO NOTE [L]
HOLES AND PUNCTURES	NONE [G] REFER TO NOTE [M]	NONE [G] REFER TO NOTE [M]	NONE	15% PANEL CHORD (MAX. DIMENSION) REFER TO NOTE [M]

ALLOWABLE DAMAGE FOR TE WEDGE [R] [AA]
(ALUMINUM HONEYCOMB)
TABLE V

Wing Inboard Trailing Edge Flap Structure Allowable Damage
Figure 16 (Sheet 13)

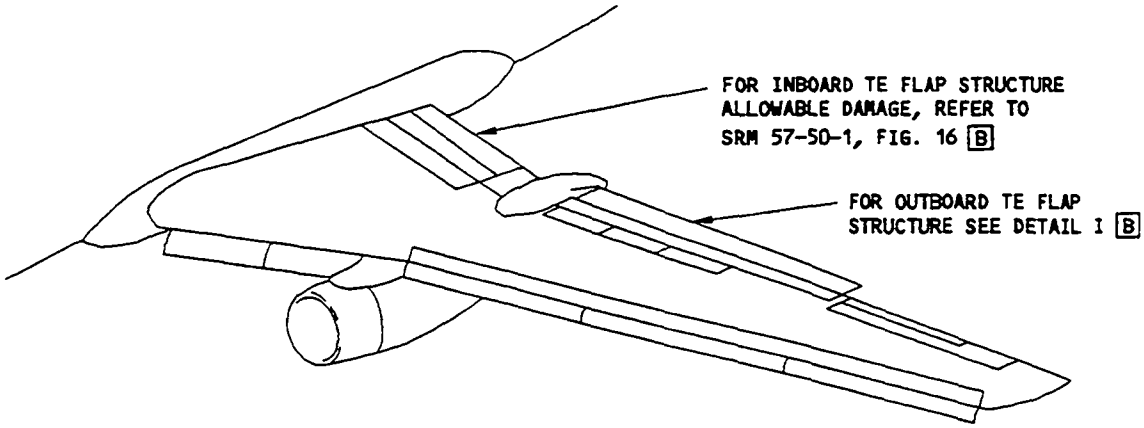

Wing Outboard Trailing Edge Flap Structure Allowable Damage
Figure 17 (Sheet 1)

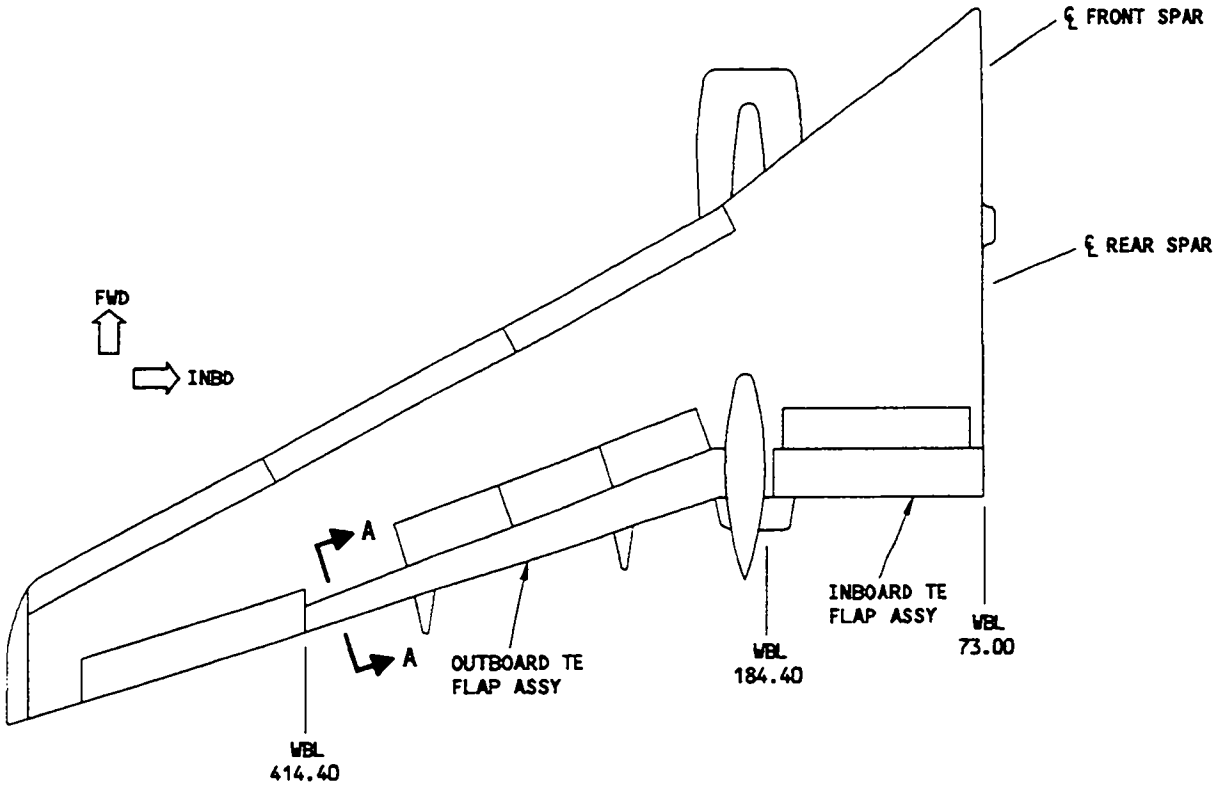

WING PLAN VIEW
DETAIL I

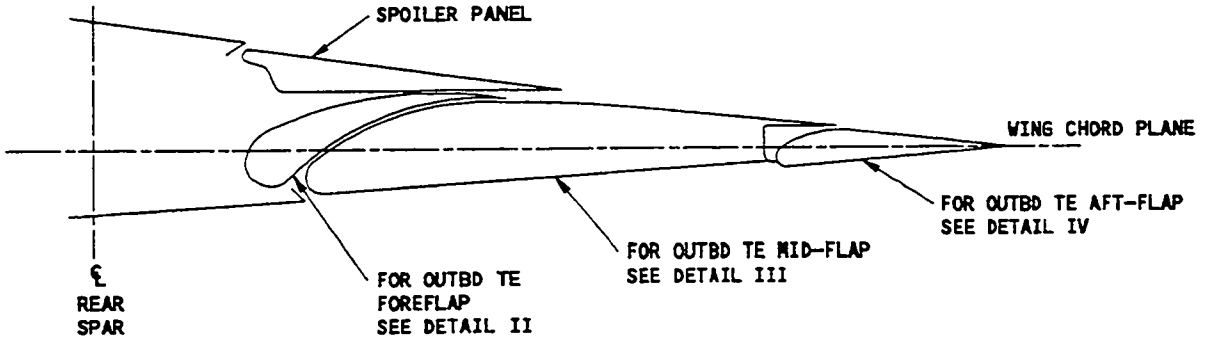

SECTION A-A

Wing Outboard Trailing Edge Flap Structure Allowable Damage
Figure 17 (Sheet 2)

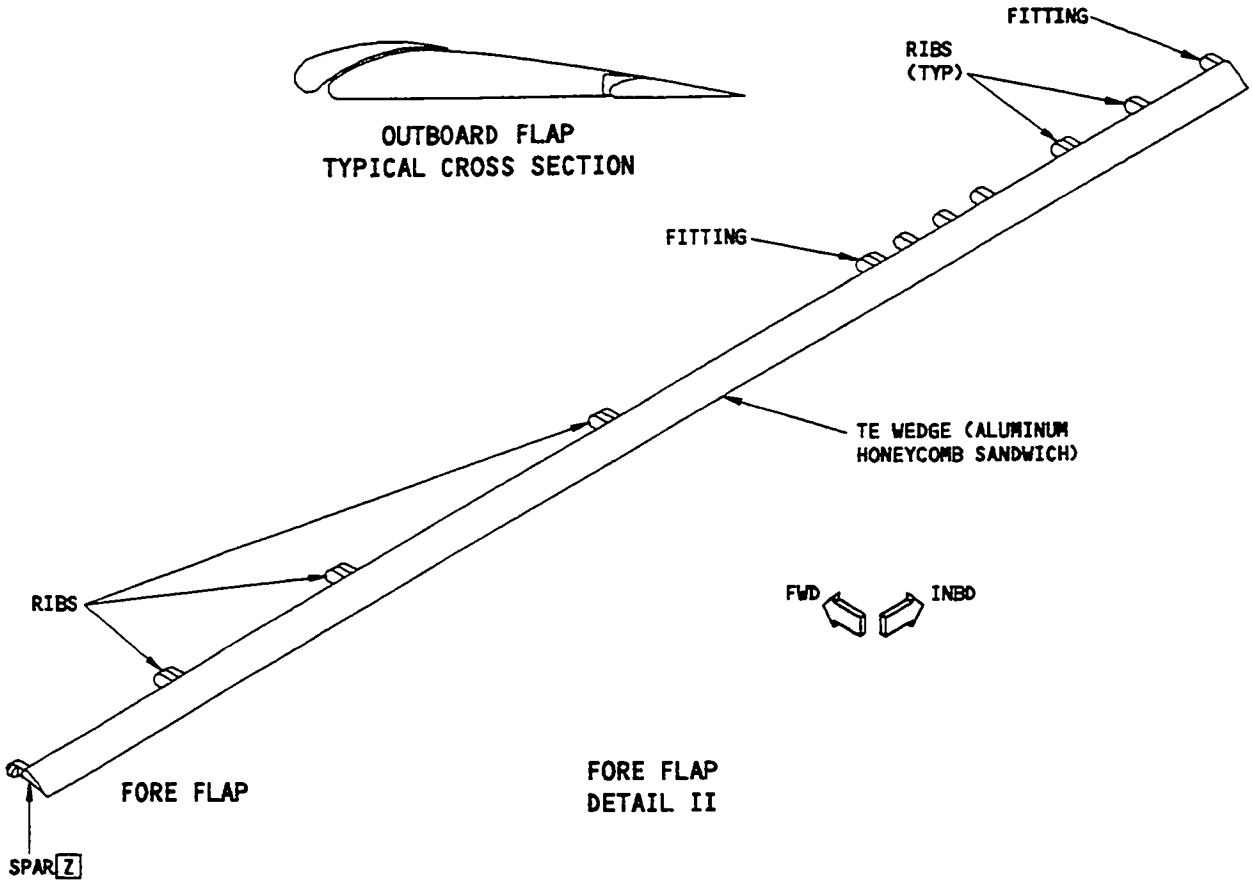

MATERIAL: ALUMINUM, EXCEPT AS NOTED

LOCATION	CRACKS	NICKS, GOUGES, SCRATCHES AND CORROSION	DENTS	PUNCTURES AND HOLES	DELAMINATION
RIBS	C	E W	F	S	—
TE WEDGE (ALUMINUM HONEYCOMB SANDWICH)	Q	Q	Q	Q	Q
FITTING	T	T	NOT PERMITTED	NOT PERMITTED	—

ALLOWABLE DAMAGE FOR DETAIL II
TABLE I

Wing Outboard Trailing Edge Flap Structure Allowable Damage
Figure 17 (Sheet 3)

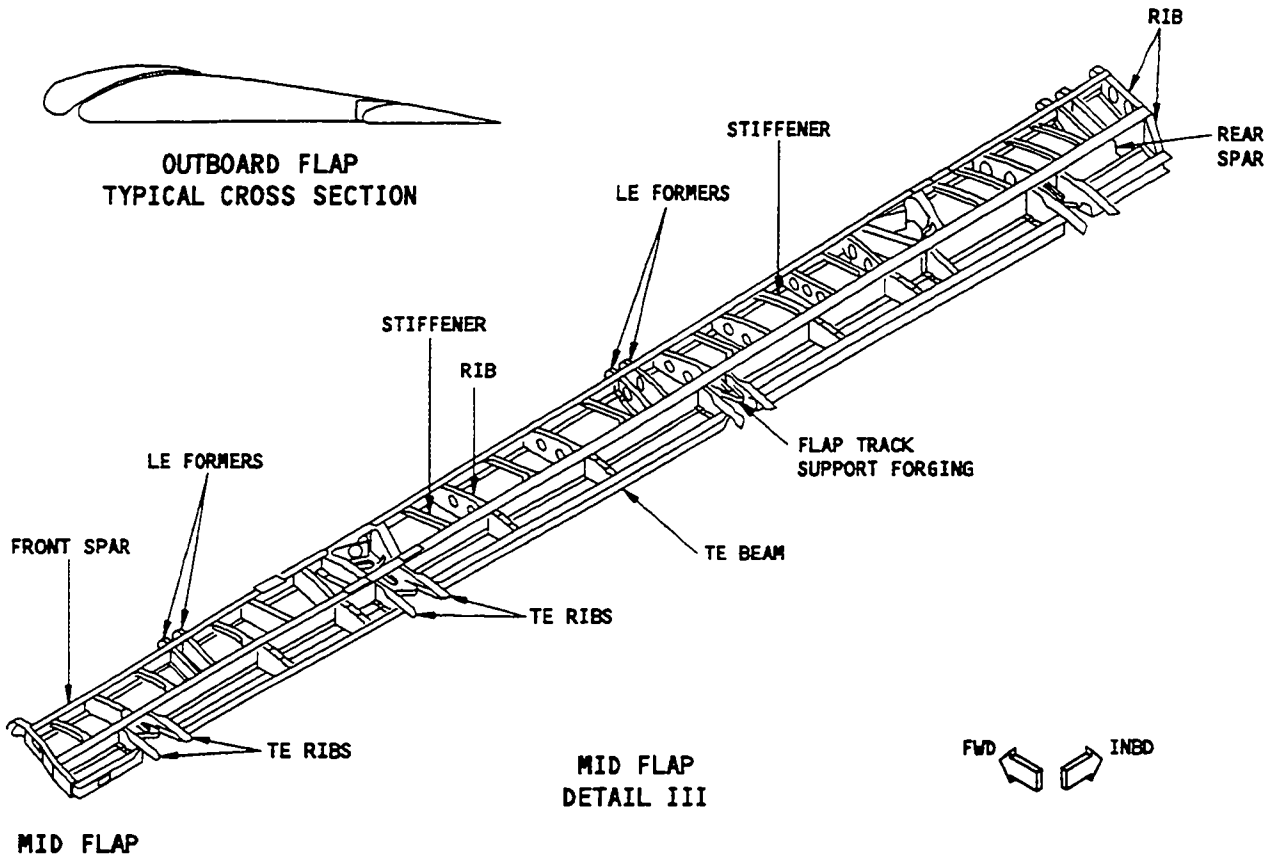

MATERIAL: ALUMINUM

LOCATION	CRACKS	NICKS, GOUGES, SCRATCHES AND CORROSION	DENTS	PUNCTURES AND HOLES
LE FORMERS, RIBS	C	E W	F	S
SKIN STIFFENERS	C	E	F	Y
TE BEAMS, TE RIBS, WEDGE, SPARS - CHORDS	C	E	NOT PERMITTED	NOT PERMITTED
WEBS	X	E	F	S
STIFFENERS	C	E	F	Y
RIBS (MACHINED/FORGED)	C	E W	NOT PERMITTED	NOT PERMITTED

ALLOWABLE DAMAGE FOR DETAIL III
TABLE II

Wing Outboard Trailing Edge Flap Structure Allowable Damage
Figure 17 (Sheet 4)

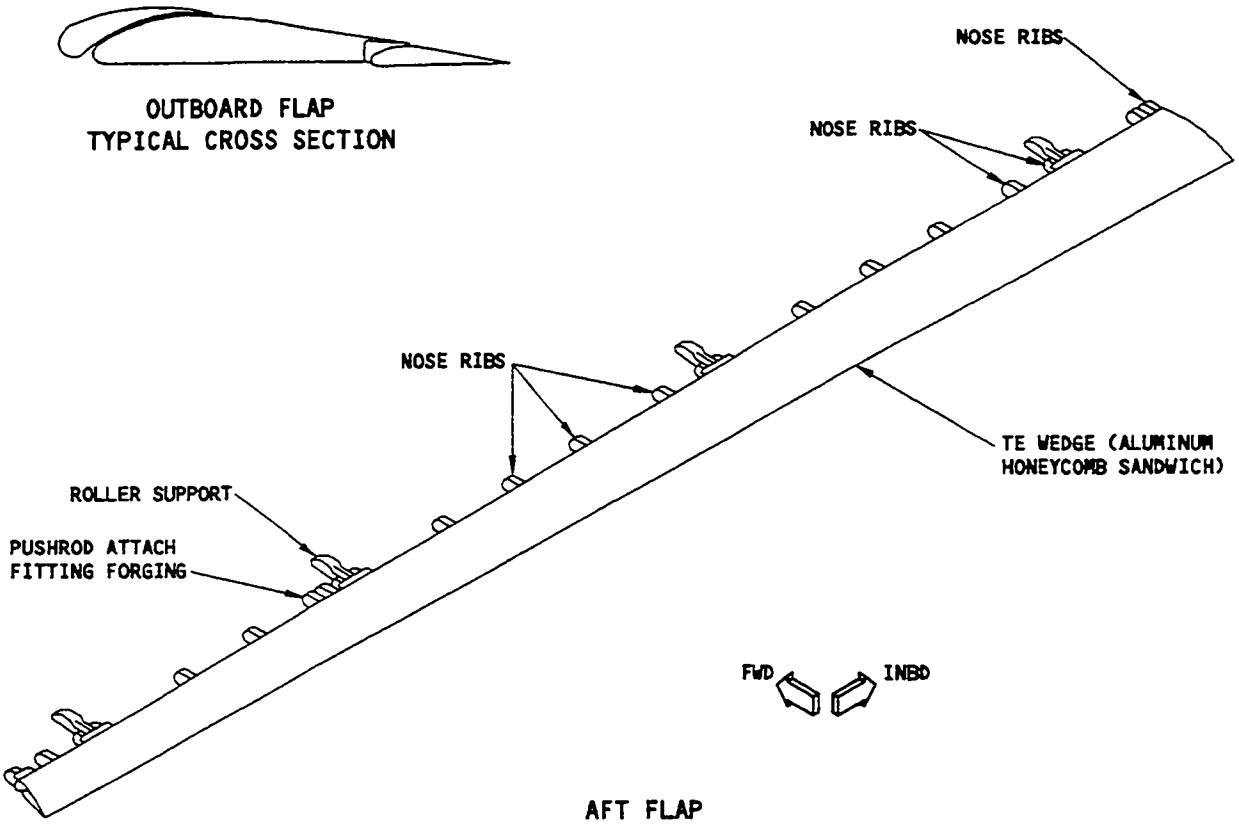

AFT FLAP
DETAIL IV

MATERIAL: ALUMINUM

LOCATION	CRACKS	NICKS, GOUGES, SCRATCHES AND CORROSION	DENTS	PUNCTURES AND HOLES	DELAMINATION
NOSE RIBS	C	E W	F	S	—
ROLLER SUPPORT	T	T	NOT PERMITTED	NOT PERMITTED	—
TE WEDGE (ALUMINUM HONEYCOMB SANDWICH)	Q	Q	Q	Q	Q
PUSHROD ATTACHMENT	T	T	NOT PERMITTED	NOT PERMITTED	—

ALLOWABLE DAMAGE FOR DETAIL IV
TABLE III

Wing Outboard Trailing Edge Flap Structure Allowable Damage
Figure 17 (Sheet 5)

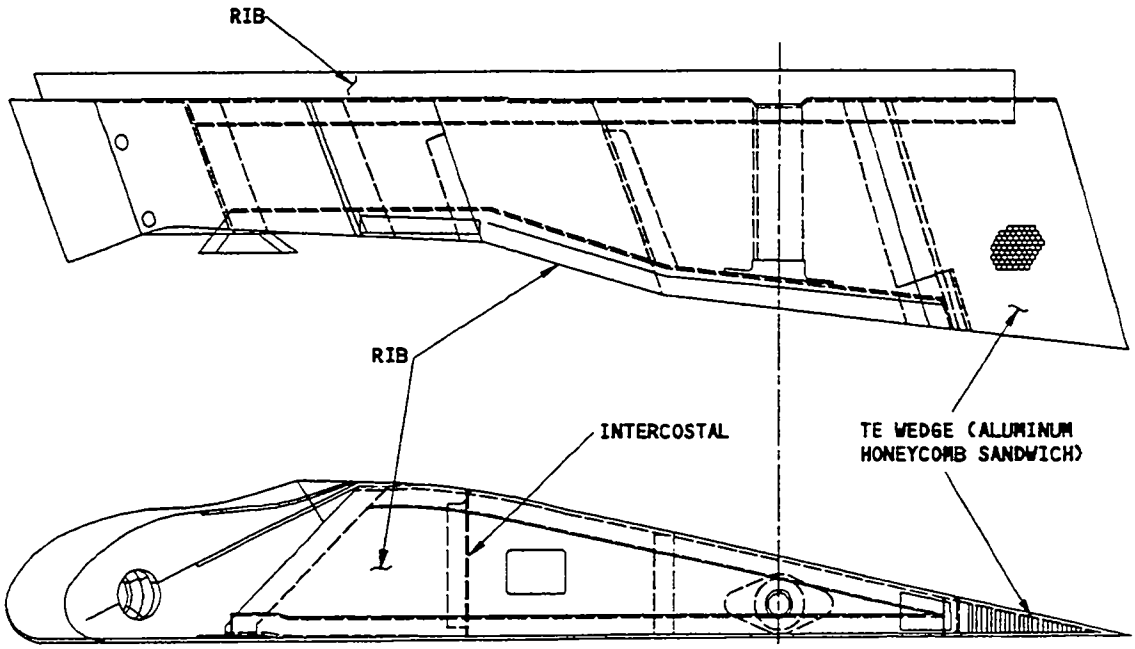

HINGED FLAP ASSEMBLY
DETAIL V

MATERIAL: ALUMINUM

LOCATION	CRACKS	NICKS, GOUGES, SCRATCHES AND CORROSION	DENTS	PUNCTURES AND HOLES	DELAMINATION
RIBS	C	E W	F	S	—
INTERCOSTAL	C	E W	F	S	—
TE WEDGE (ALUMINUM HONEYCOMB SANDWICH)	Q	Q	Q	Q	Q

ALLOWABLE DAMAGE FOR DETAIL V
TABLE IV

Wing Outboard Trailing Edge Flap Structure Allowable Damage
Figure 17 (Sheet 6)

E74324

NOTES

- THE ALLOWABLE DAMAGE LIMITS GIVEN IN THIS FIGURE WILL NOT HAVE AN EFFECT ON A STRUCTURALLY SIGNIFICANT ITEM (SSI) GIVEN IN SRM 51-00-4, FIG. 3. THUS, NO CHANGE TO THE SUPPLEMENTAL STRUCTURAL INSPECTION DOCUMENT (SSID) INSPECTION PROGRAM IS NECESSARY.
- THESE ALLOWABLE DAMAGE LIMITS HAVE FAA APPROVAL IF THE INSPECTIONS SHOWN IN THIS FIGURE ARE COMPLETED AT THE SPECIFIED TIMES.
- ALL DIMENSIONS ARE IN INCHES UNLESS GIVEN DIFFERENTLY.
- REFER TO AMM 51-21 FOR PROTECTIVE FINISH TREATMENT OF REPAIRED AREAS.
- REFER TO SRM 51-10-1 FOR DAMAGE CLASSIFICATION.
- REFER TO SRM 51-10-2 FOR PROTECTIVE TREATMENT OF METAL REPAIR PARTS. APPLY A CHEMICAL CONVERSION COATING TO BARE ALUMINUM SURFACES.
- REFER TO SRM 51-10-6 FOR CORROSION DAMAGE CLEANUP.
- REFER TO SRM 51-30-6 FOR FASTENER EDGE MARGINS.
- REFER TO SRM 51-70 FOR AERODYNAMIC SMOOTHNESS.
- NICKS, GOUGES, AND SCRATCHES THAT DO NOT GO ALL THE WAY THROUGH CLAD SURFACES CAN BE IGNORED. MAKE AN INSPECTION OF THE DEPTH OF PENETRATION AS SHOWN IN SRM 51-10-1.
- KEEP RECORDS OF THE LOCATION OF ALL ALLOWABLE DAMAGE. MAKE AN INSPECTION FREQUENTLY AND DO PERMANENT REPAIRS IMMEDIATELY IF THE DAMAGE ECOMES LARGER.

[A] IT IS RECOMMENDED TO REMOVE MOISTURE FROM THE DAMAGED AREA. USE VACUUM AND HEAT (A MAXIMUM OF 150°F (66°C) TO REMOVE THAT MOISTURE. CLEAN THE DAMAGED AREA. SEAL THE DAMAGED AREA WITH ALUMINUM FOIL TAPE (SPEED TAPE) 3M-Y436 OR AN EQUIVALENT. DO NOT USE SPEED TAPE AT THESE CRITICAL LOCATIONS.

- 3 INCHES ON EACH SIDE OF THE CENTERLINE ALONG THE FITTINGS OR THE FOREFLAP TRACK IN THE FOREFLAP
- 3 INCHES ON EACH SIDE OF THE CENTERLINE ALONG THE PUSHROD ATTACHMENT OR ROLLER SUPPORTS IN THE AFT FLAP
- 2 INCHES AFT OF THE SPAR IN THE FOREFLAP AND THE AFT FLAP.

KEEP A RECORD OF THE LOCATION WHERE SPEED TAPE IS INSTALLED. REMOVE THE SPEED TAPE TO MAKE AN INSPECTION OF THE LOCATION EACH 150 FLIGHT HOURS AFTER THE TAPE IS APPLIED. REPLACE THE TAPE IF IT STARTS TO COME OFF OR DETERIORATION IS FOUND. IF THE DAMAGE BECOMES LARGER, INSTALL A PERMANENT REPAIR. THE DAMAGE MUST BE REPAIRED AT OR BEFORE THE SUSEQUENT "C" CHECK.

[B] REFER TO SRM 57-50-1, FIGURE 3 FOR TE FLAP SKIN.

[C] CRACKS ARE NOT PERMITTED EXCEPT FOR EDGE CRACKS WHICH MUST BE REMOVED AS SHOWN IN DETAILS VI,X,XI,XII, AND XIII.

[D] MIX, APPLY, AND CURE AS GIVEN IN THE MANUFACTURERS INSTRUCTIONS.

[E] REMOVE NICKS, GOUGES, SCRATCHES, AND CORROSION AS SHOWN IN DETAILS VI,VII,IX,X, XI,XII, AND XIII.

[F] DENTS ARE PERMITTED AS SHOWN IN DETAIL VIII, IF DEPTH OF DENT (Y) IS NOT LARGER THAN 0.125 INCH.

[G] THESE RESTRICTIONS APPLY TO THE UPPER AND LOWER CHORDS, THE HONEYCOMB CORE BETWEEN THE UPPER AND LOWER CHORDS, AND THOSE AREAS CONTAINED WITHIN THE BOUNDARY OF A 2-INCH STRIP ALONG THE TRAILING EDGE, ALONG THE EDGES AT THE ENDS OF THE FLAPS, AND ALONG THE AREA JUST AFT OF THE UPPER AND LOWER CHORDS.

[H] CLEAN UP DAMAGE AS SHOWN IN DETAIL XV. INSTALL PERMANENT REPAIR WITHIN 150 FLIGHT HOURS.

[I] THE DISTANCE BETWEEN ADJACENT UNFILLED SURFACE DENTS MUST BE GREATER THAN 1/2 MAXIMUM DIMENSION OF THE LARGER DENTED AREA.

[J] CHECK ESPECIALLY FOR DELAMINATION AROUND ALL DAMAGE, IN CRITICAL AREAS, NEAR FITTINGS AND SPARS, AND IN THE AREA NEAR UPPER AND LOWER CHORDS. DISTANCE BETWEEN ADJACENT ALLOWABLE DELAMINATED AREAS MUST BE GREATER THAN 1/2 MAXIMUM DIMENSION OF THE LARGER DELAMINATED AREA.

[K] AS AN INTERIM MEASURE, CLEAN UP DAMAGE AT OR NEAR EDGES AS SHOWN IN DETAILS XII AND XV. INSTALL PERMANENT REPAIR WITHIN 150 FLIGHT HOURS.

[L] AS AN INTERIM MEASURE, CLEAN UP CRACKS AT OR NEAR EDGES AS SHOWN IN DETAILS XII AND XV. AS AN INTERIM MEASURE FOR OTHER CRACKS, STOP DRILL CRACKS AS SHOWN IN SRM 51-10-1 AND NOTE [A]. INSTALL PERMANENT REPAIR WITHIN 150 SUBSEQUENT FLIGHT HOURS.

Wing Outboard Trailing Edge Flap Structure Allowable Damage
Figure 17 (Sheet 7)

BOEING PROPRIETARY - Copyright © - Unpublished Work - See title page for details.

NOTES (CONT)

[M] AS AN INTERIM MEASURE, CLEAN UP HOLES AND PUNCTURES NEAR EDGES AS SHOWN IN DETAIL XV AND INSTALL A PERMANENT REPAIR WITHIN 150 SUBSEQUENT FLIGHT HOURS. AS AN INTERIM MEASURE FOR OTHER HOLES AND PUNCTURES, CUT FACE SKIN AROUND HOLES AND PUNCTURES TO A SMOOTH CIRCULAR OR OVAL SHAPE. SEE NOTE [A] TO PREPARE SURFACE.

[N] CLEAN UP THE DAMAGE AS SHOWN IN DETAIL VII.

[O] SCRATCHES MAY BE ORIENTED IN ANY DIRECTION. SCRATCHES WITHIN THE LIMITS DO NOT REQUIRE REWORK PROVIDED NO TWO INTERSECT AND PROVIDED NO SCRATCH IS WITHIN 2.00 OF AN EDGE, UPPER CHORD, LOWER CHORD, TRACK, OR SUPPORT FITTING. OTHERWISE, CLEAN UP THE DAMAGE AS SHOWN IN DETAIL VII.

[P] MAXIMUM DIMENSIONS MAY BE ORIENTED IN ANY DIRECTION. DAMAGE BOUNDARY MAY BE OF ANY SHAPE PROVIDED MAXIMUM DIMENSIONS ARE NOT EXCEEDED. CIRCULAR BOUNDARY USED TO INDICATE MAXIMUM DIMENSION OF DAMAGE.

[Q] SEE TABLE V.

[R] SEE DETAIL XVII.

[S] HOLES AND PUNCTURES ARE PERMITTED UP TO 0.25 MAX DIA AFTER CLEANUP PROVIDED DAMAGE IS 2.0 MIN FROM ANY OTHER HOLE, PART EDGE, OR OTHER DAMAGE. CLEAN UP DAMAGE AND FILL WITH A 2117-T3 OR 2117-T4 ALUMINUM PROTRUDING HEAD RIVET INSTALLED WET WITH BMS 5-95 SEALANT.

[T] NOT PERMITTED EXCEPT FOR LUG DAMAGE WHICH MUST BE REMOVED AS SHOWN IN DETAIL XVIII.

[U] DAMAGE NOT PERMITTED WITHIN 0.02 OF BUSHING.

[V] DENTS ARE PERMITTED PER DETAIL XIV AND TABLE V. DENTS THAT ARE LARGER THAN THE LIMITS GIVEN IN DETAIL XIV OR TABLE V MUST BE FILLED WITH POTTING COMPOUND.
REFER TO SRM 51-40-1. FILL OR REPAIR DENTS THAT ARE SMALLER THAN THE LIMITS GIVEN IN DETAIL XIV AND TABLE V, BUT SHOW ONE OR MORE OF THE CONDITIONS THAT FOLLOW:

- THE DISTANCE BETWEEN DENTS THAT ARE NOT FILLED IS LESS THAN HALF OF THE MAXIMUM DIMENSION OF THE LARGER DAMAGED AREA
- THE DISTANCE BETWEEN A DENT THAT IS NOT FILLED AND A DIFFERENT LOCATION OF DAMAGE IS LESS THAN HALF OF THE MAXIMUM DIMENSION OF THE LARGER DAMAGED AREA
- THE DEPTH (Y) OF A DENT THAT IS NOT FILLED IS LARGER THAN 0.10.

[W] MAXIMUM ALLOWABLE CROSS SECTIONAL AREA REMOVED FROM WEB INCLUDING EXISTING HOLES AND SCRATCHES SHALL NOT EXCEED 20%.

[X] CRACKS NOT PERMITTED EXCEPT FOR EDGE CRACKS WHICH MUST BE REMOVED AS SHOWN IN DETAILS VI AND XII.

[Y] HOLES AND PUNCTURES IN FREE FLANGE ARE PERMITTED AS SHOWN IN DETAIL XVI IN WEB STIFFENERS AND IN SKIN STIFFENERS.

[Z] SPAR IS CONSIDERED TO BE A PART OF THE TRAILING EDGE WEDGE.

[AA] DAMAGE TO EDGES OF ALUMINUM HONEYCOMB TRAILING EDGE WEDGES SHOULD BE BLENDED OUT TO LIMITATIONS GIVEN, CUMULATIVE LENGTH OF BLENDOUT FOR EACH EDGE MUST NOT EXCEED 15% OF EDGE LENGTH.

[AB] EDGE DAMAGE IS PERMITTED UP TO:

- A LENGTH OF 1.0 INCH AND A DEPTH OF 1.0 INCH FOR THE FOREFLAP
- A LENGTH OF 2.0 INCHES AND A DEPTH OF 1.5 INCHES FOR THE AFT FLAP.

EDGE DAMAGE IS SEALED AS FOLLOWS:

- APPLY ONE LAYER OF SPEED TAPE WHICH EXTENDS OUT OF 2 INCHES ALL AROUND THE DAMAGE [A]
- APPLY A SECOND LAYER OF SPEED TAPE WHICH EXTENDS OUT OF 1 INCH ALL AROUND THE EDGES OF THE FIRST LAYER OF SPEED TAPE.

THESE DAMAGE LOCATIONS MUST BE A MINIMUM OF 10 TIMES THE LENGTH OF DAMAGE (EDGE TO EDGE) FROM THE NEAREST HOLES OR OTHER DAMAGE LOCATIONS.

Wing Outboard Trailing Edge Flap Structure Allowable Damage
Figure 17 (Sheet 8)

BOEING PROPRIETARY - Copyright © - Unpublished Work - See title page for details.

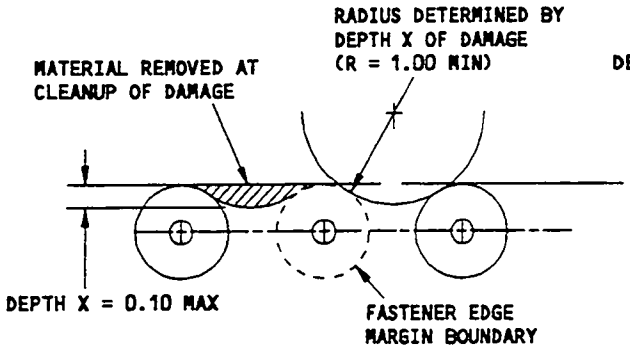

DAMAGE CLEANUP OF EDGES WHERE
FASTENER EDGE MARGINS DO NOT OVERLAP

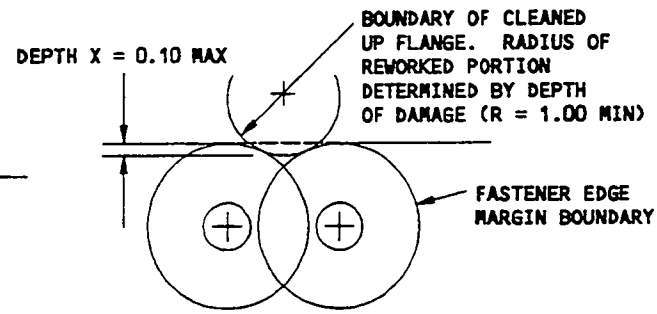

DAMAGE CLEANUP OF EDGES WHERE
FASTENER EDGE MARGINS OVERLAP

DETAIL VI

Wing Outboard Trailing Edge Flap Structure Allowable Damage
Figure 17 (Sheet 9)

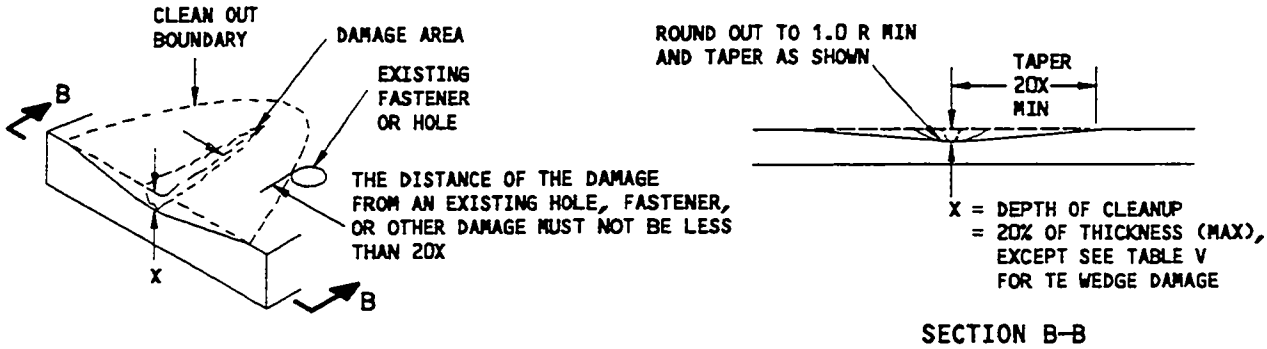

REMOVAL OF NICK, GOUGE, CORROSION, AND SCRATCH DAMAGE ON A SURFACE
(DAMAGE AT EDGE SHOWN; DAMAGE AWAY FROM EDGE SIMILAR)
DETAIL VII

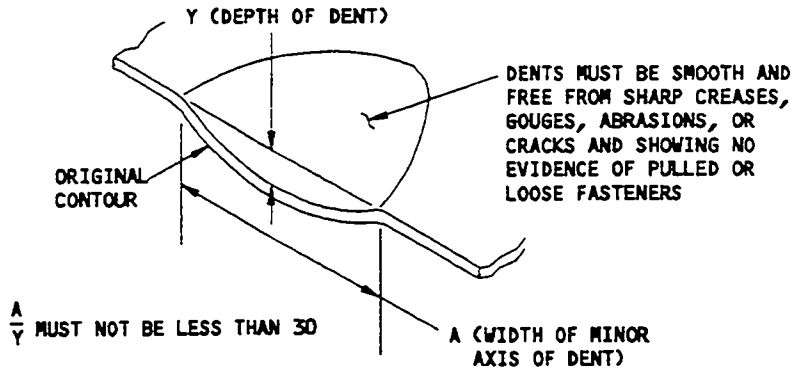

ALLOWABLE DAMAGE FOR DENT
DETAIL VIII

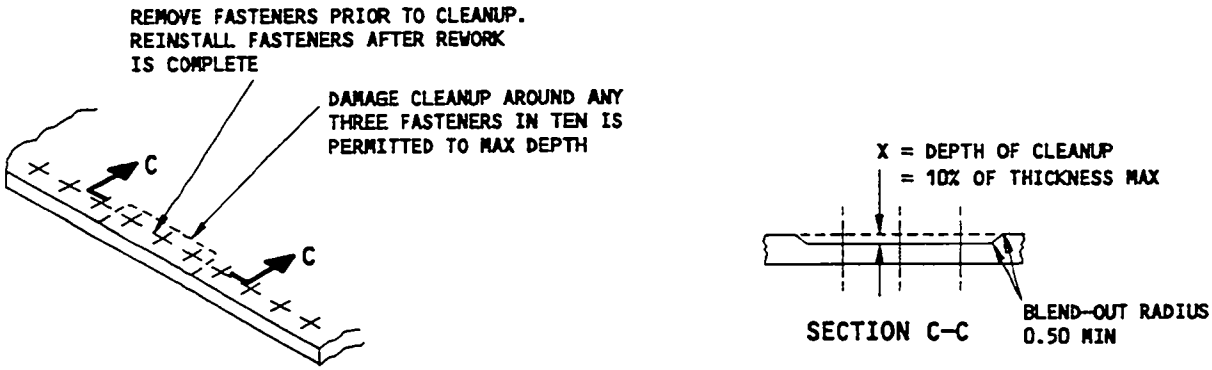

DAMAGE CLEANUP
DETAIL IX

Wing Outboard Trailing Edge Flap Structure Allowable Damage
Figure 17 (Sheet 10)

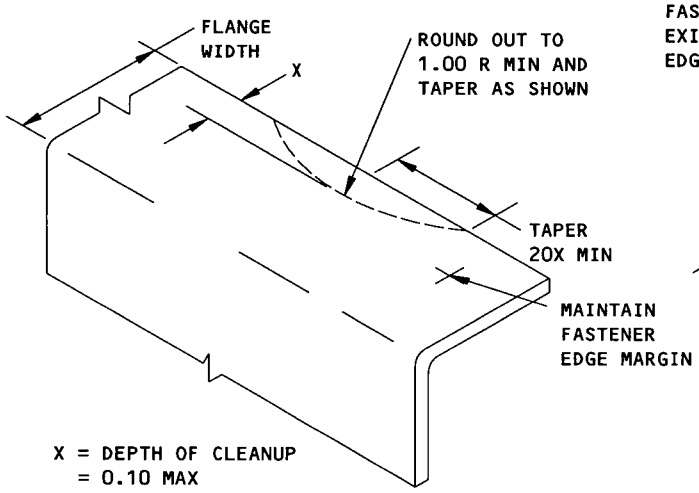

REMOVAL OF DAMAGE ON AN EDGE
DETAIL X

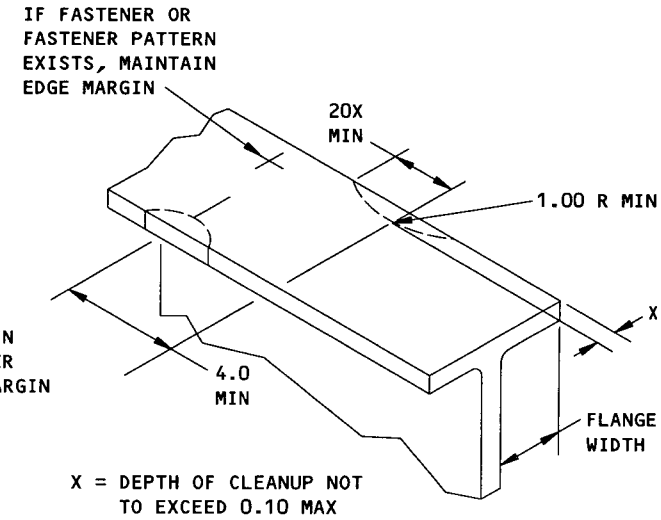

REMOVAL OF DAMAGE ON AN EDGE
DETAIL XI

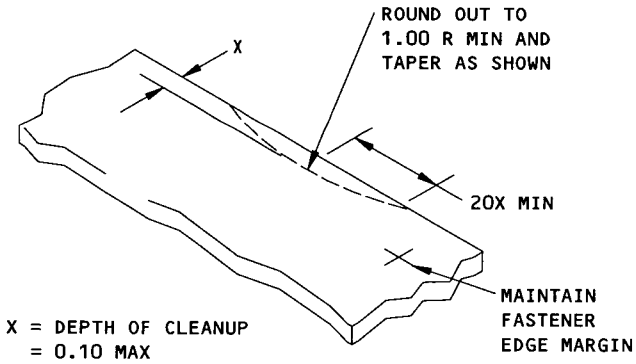

REMOVAL OF DAMAGE ON AN EDGE
DETAIL XII

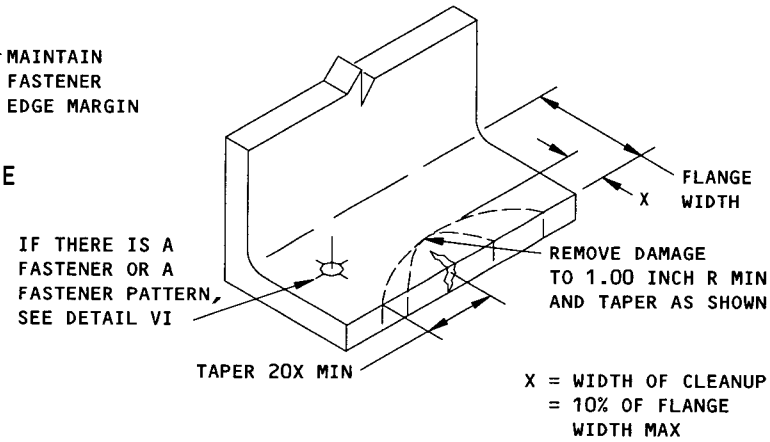

REMOVAL OF DAMAGE ON AN EDGE
DETAIL XIII

Wing Outboard Trailing Edge Flap Structure Allowable Damage
Figure 17 (Sheet 11)

BOEING PROPRIETARY - Copyright © - Unpublished Work - See title page for details.

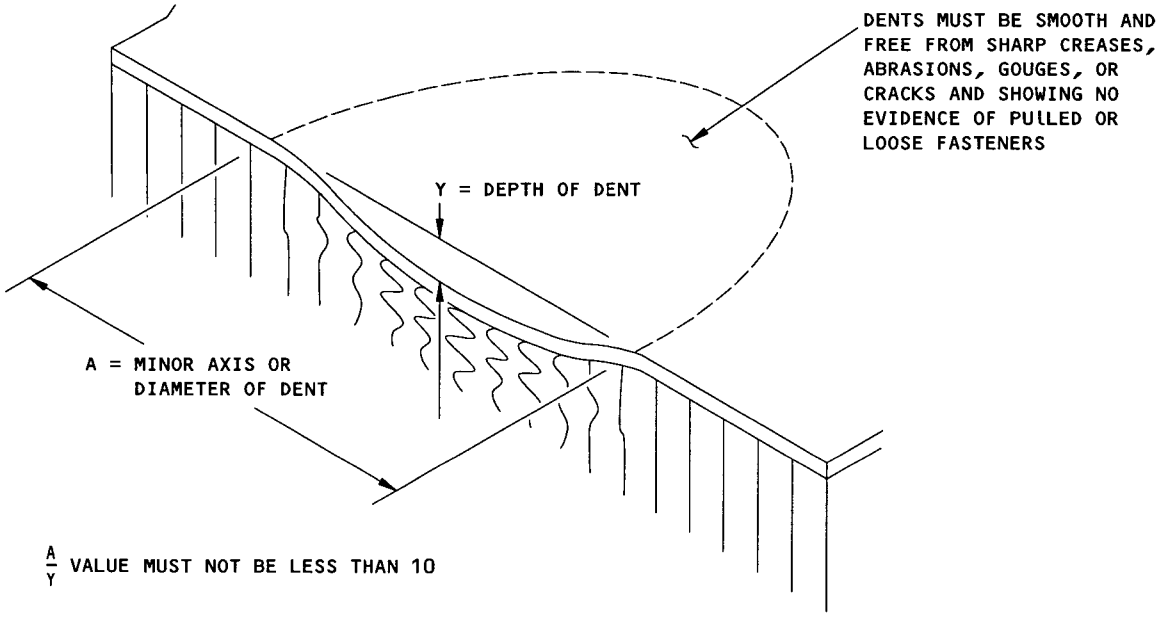

PROFILE OF PERMISSIBLE DENTS ON TE WEDGE (ALUMINUM HONEYCOMB)
DETAIL XIV

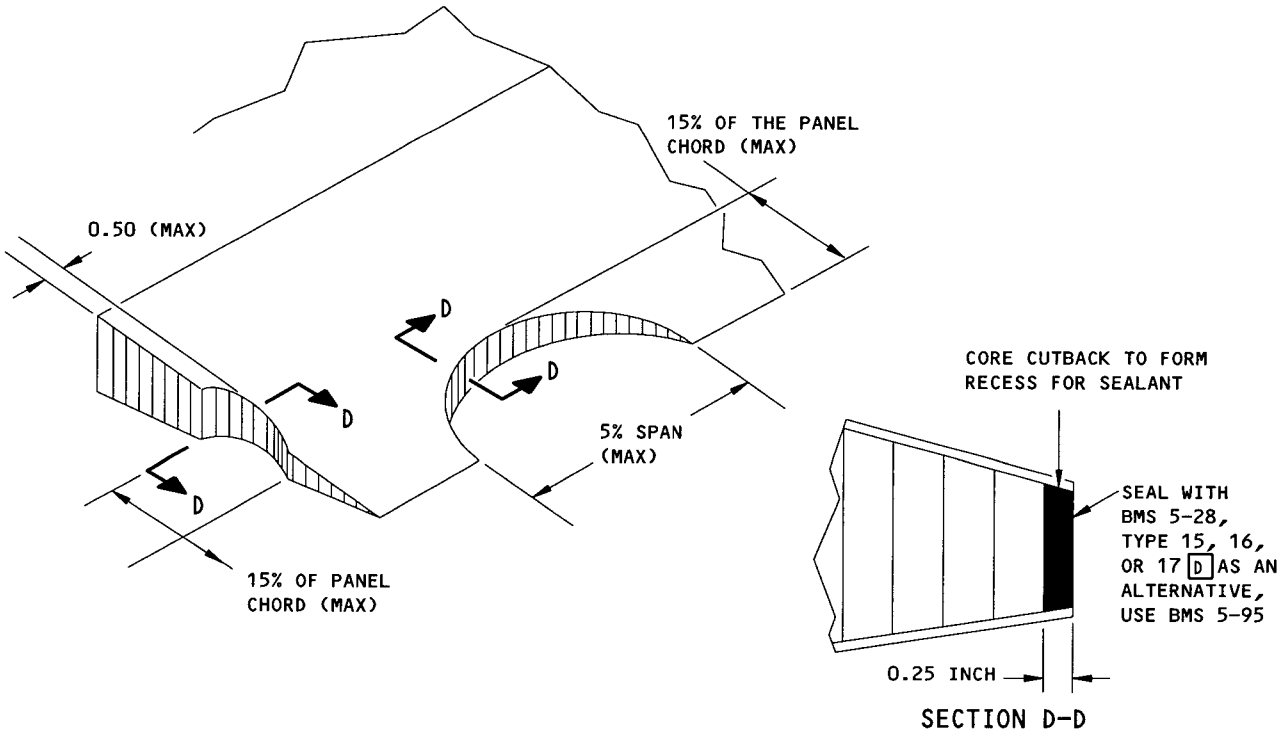

DAMAGE CLEANUP ON AFT EDGE OR SIDE EDGES OF TRAILING EDGE WEDGE
DETAIL XV

Wing Outboard Trailing Edge Flap Structure Allowable Damage
Figure 17 (Sheet 12)

BOEING PROPRIETARY - Copyright © - Unpublished Work - See title page for details.

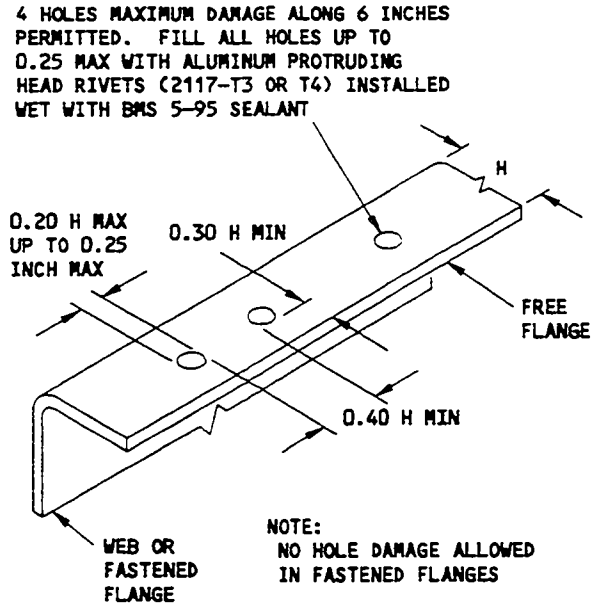

ALLOWABLE DAMAGE LIMITS FOR HOLES IN FREE FLANGE
DETAIL XVI

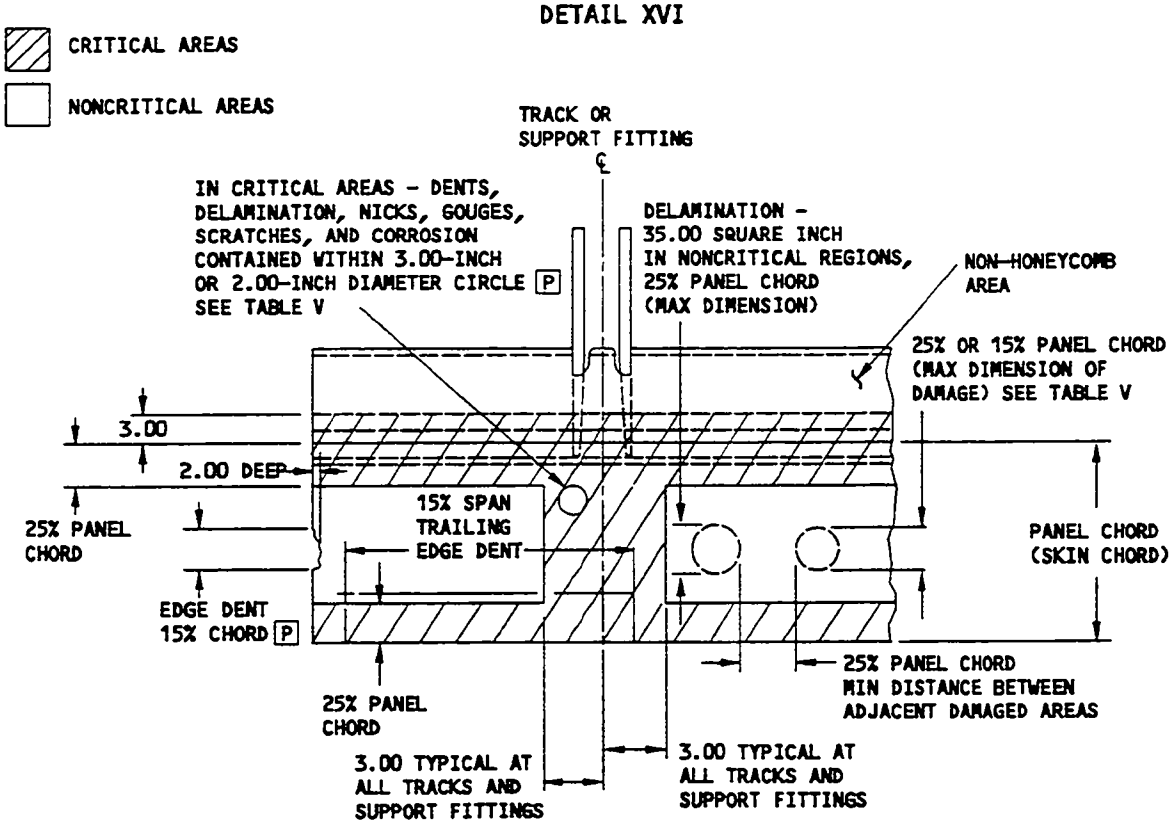

TRAILING EDGE WEDGE (ALUMINUM HONEYCOMB)
DETAIL XVII

Wing Outboard Trailing Edge Flap Structure Allowable Damage
Figure 17 (Sheet 13)

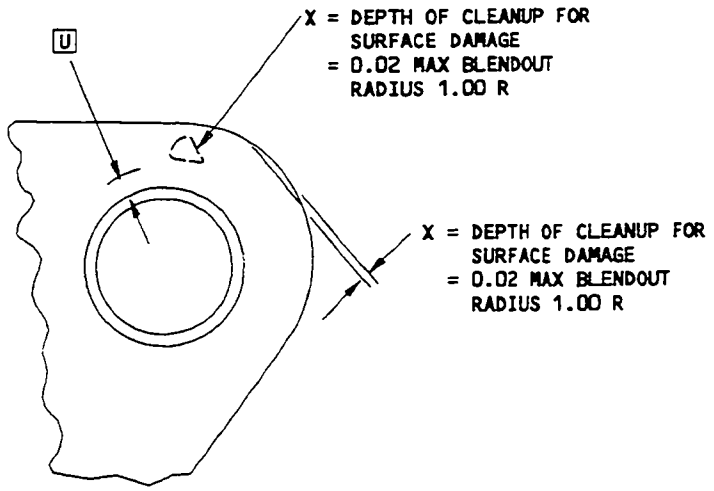

DAMAGE CLEANUP FOR LUG SURFACES
DETAIL XVIII

TYPE OF DAMAGE	TRAILING EDGE AA	OTHER TE WEDGE EDGES AA	SURFACES	
			CRITICAL AREAS	NONCRITICAL AREAS
DENTS I V	25% PANEL CHORD, 15% SPAN H	NONE ON FWD EDGE G 15% PANEL CHORD AND 2.00 DEEP ON EDGES AT ENDS OF FLAPS H	AREA CONTAINED WITHIN 3.0-INCH DIA. CIRCLE REFER TO DETAIL XIV	25% PANEL CHORD (MAX. DIMENSION) REFER TO DETAIL XIV
DELAMINATION J	H AB	H AB	AREA CONTAINED WITHIN A 3.00-INCH DIA. CIRCLE	MAX. SIZE OF ANY SINGLE DELAMINATED AREA - 35 IN^2. 25% CHORD MAX. DIM. IN ANY DIRECTION
NICKS, GOUGES, SCRATCHES, AND CORROSION	NONE WITHIN 2.00 OF EDGE G AND 1.50 OF FASTENERS K	NONE WITHIN 2.00 OF EDGE G AND 1.50 OF FASTENERS K	15% SKIN THICKNESS MAX. DIM - 2.00 N	25% SKIN THICKNESS, 25% SKIN CHORD (MAX. DIMENSION) REFER TO NOTE O
CRACKS	NONE G AB REFER TO NOTE L	NONE G REFER TO NOTE L	NONE	15% PANEL CHORD (MAX. LENGTH) REFER TO NOTE L
HOLES AND PUNCTURES	NONE G REFER TO NOTE M	NONE G REFER TO NOTE M	NONE	15% PANEL CHORD (MAX. DIMENSION) REFER TO NOTE M

ALLOWABLE DAMAGE FOR TE WEDGE (ALUMINUM HONEYCOMB) R
TABLE V

Wing Outboard Trailing Edge Flap Structure Allowable Damage
Figure 17 (Sheet 14)

E74385

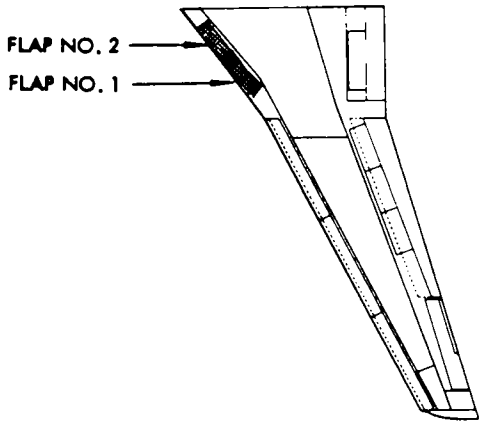

ITEM	MATERIAL	REPAIR FIG. NO.
1	AL ALLOY CASTING A 356-T6	
2	AL ALLOY CASTING A 356-T6	57-50-3 FIG. 2,3
3	AL ALLOY CASTING A 357-T61	
4	BAC1505-100081 2024-T3511	

Wing Leading Edge Flaps Structure Identification
Figure 1 (Sheet 1)

REF DWG
65-46424
65-46425

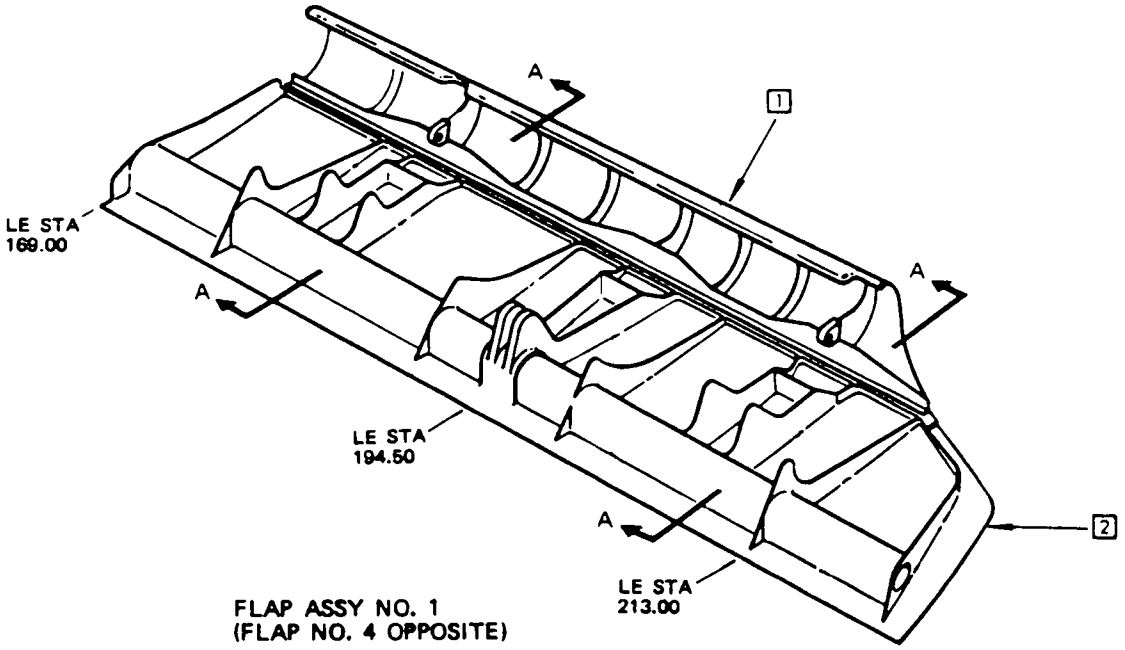

FLAP ASSY NO. 1
(FLAP NO. 4 OPPOSITE)
– ALL AIRPLANES EXCEPT ADVANCED 737 MODELS

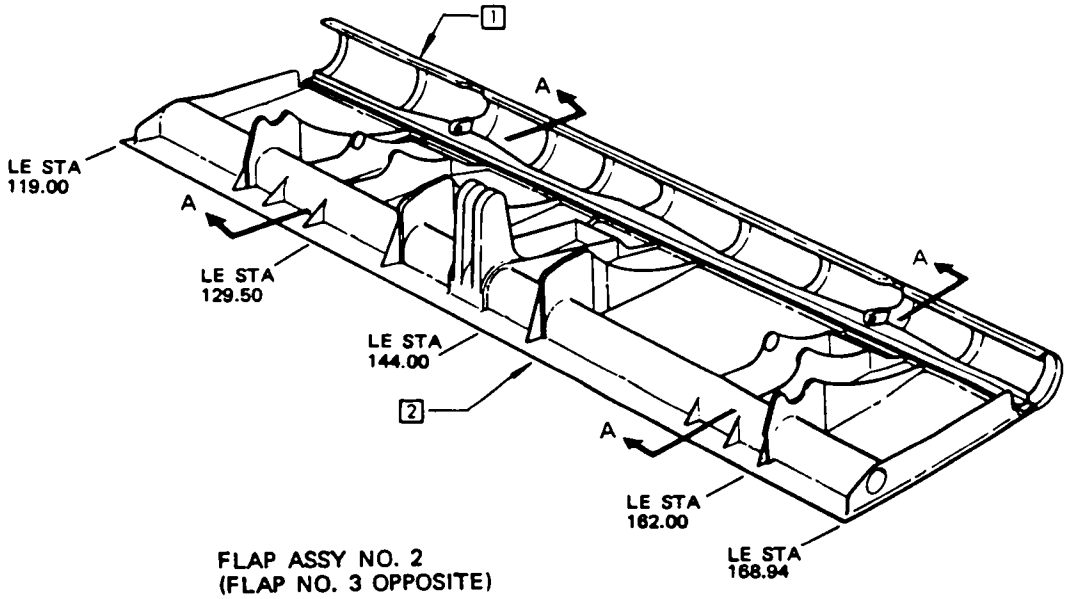

FLAP ASSY NO. 2
(FLAP NO. 3 OPPOSITE)
– ALL AIRPLANES EXCEPT ADVANCED 737 MODELS

Wing Leading Edge Flaps Structure Identification
Figure 1 (Sheet 2)

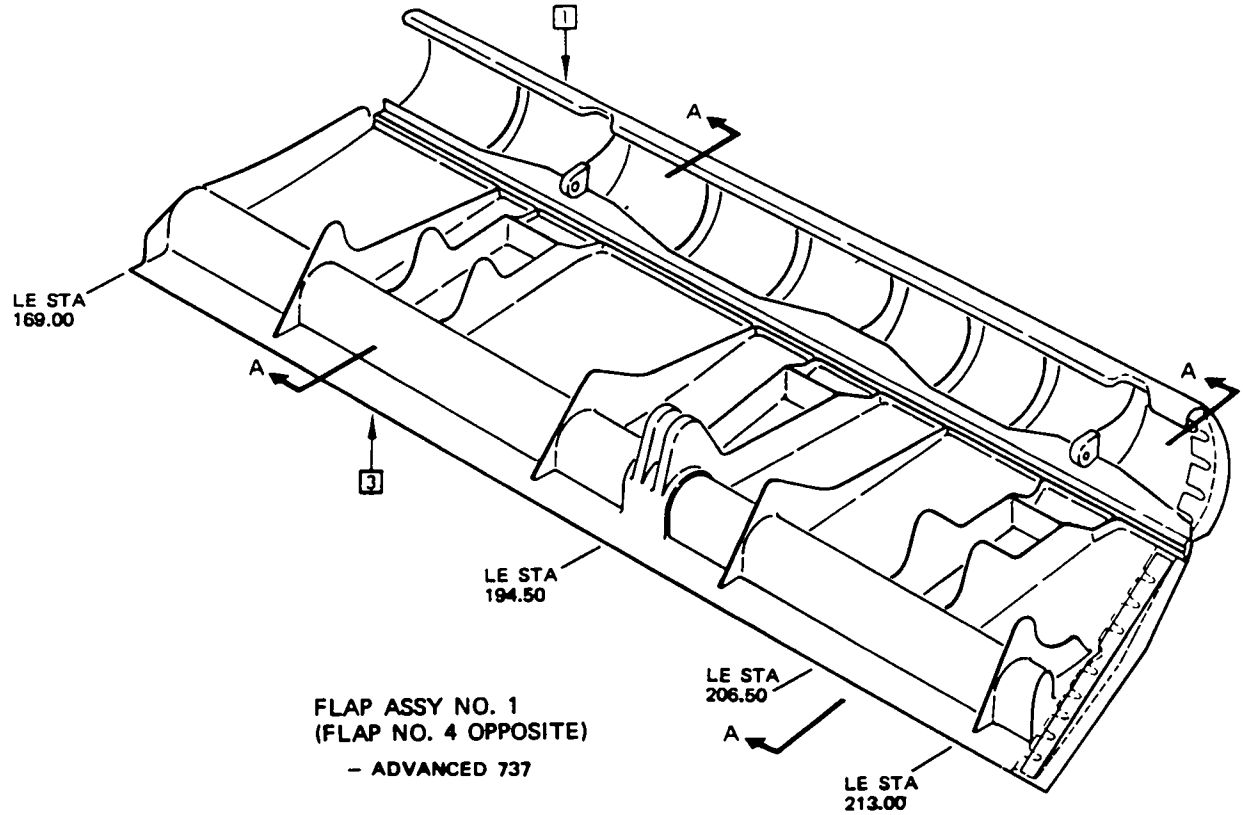

FLAP ASSY NO. 1
(FLAP NO. 4 OPPOSITE)
– ADVANCED 737

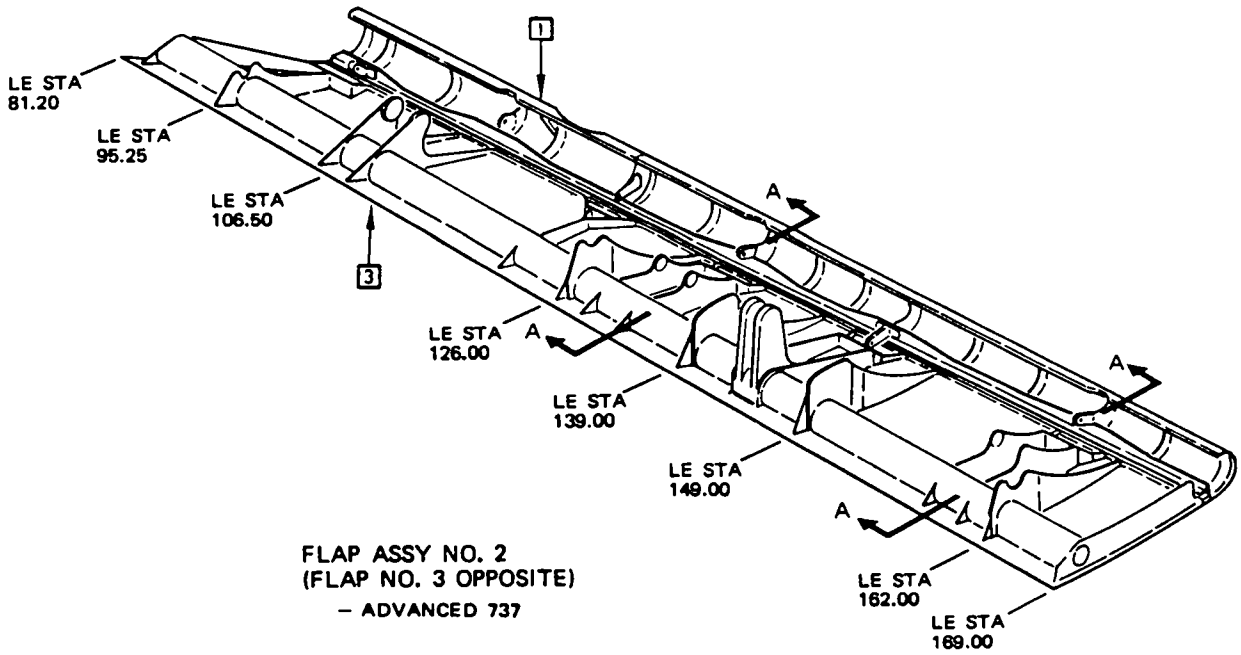

FLAP ASSY NO. 2
(FLAP NO. 3 OPPOSITE)
– ADVANCED 737

Wing Leading Edge Flaps Structure Identification
Figure 1 (Sheet 3)

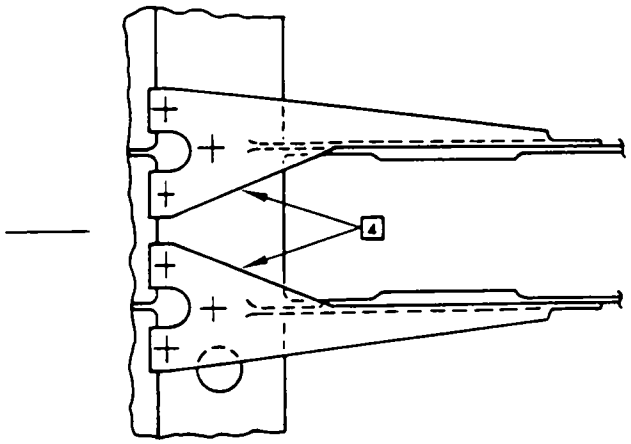

VIEW B–B

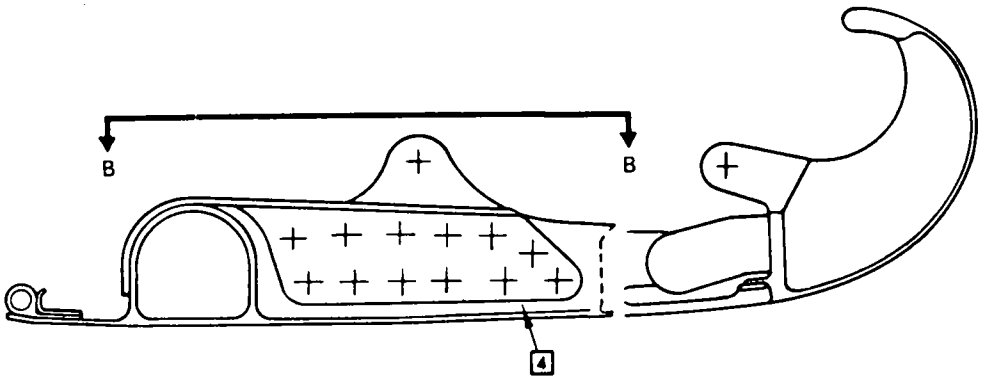

SECTION A–A (TYPICAL)

CUM LINE NUMBERS 322 THRU 358 AND 1 THRU 321 AFTER INCORPORATION OF SB 57-1077. (CUM LINE NUMBERS 359 AND ON DO NOT REQUIRE REINFORCING TEES)

Wing Leading Edge Flaps Structure Identification
Figure 1 (Sheet 4)

ITEM	MATERIAL	REPAIR FIG. NO.
1	1.125 2024-T3	
2	1.00 2024-T3	
3	0.063 CLAD 2024-T3	57-50-3 Fig. 4
4	BAC1510-775 7075-T6	
5	0.063 CLAD 7075-T6	
6	0.10 CLAD 7075-T6	
7	CASTING 356-T51 AMS 4260	
8	1.12 ALUM 2024-T3	
9	HONEYCOMB PANEL TYPE 3-10N BMS 4-4	
10	0.016 ALUM 5052-H34	
11	0.063 CLAD 2024-T42	57-50-3 Fig. 1,4
12	0.050 CLAD 2024-T3	
13	0.025 + 0.025 CLAD 2024-T3	
14	1.25 7075-T7351	
15	HONEYCOMB CORROSION RESISTANT CORE TYPE 3-10N BMS 4-4F	

ITEM	MATERIAL	REPAIR FIG. NO.

Wing Leading Edge Slats Skin and Structure Identification
Figure 2 (Sheet 1)

NOTES

A MACHINED RIB

B FOR CUM LINE NUMBERS:
1 THRU 224, 226 THRU 245, 248 THRU 257, 259 THRU 267, 269 THRU 279

C FOR CUM LINE NUMBERS:
225, 246, 247, 258, 268, 280 AND ON

D FOR CUM LINE NUMBERS:
1 THRU 310, 312 THRU 314

E FOR CUM LINE NUMBERS:
311, 315 AND ON

F DELETED

Wing Leading Edge Slats Skin and Structure Identification
Figure 2 (Sheet 2)

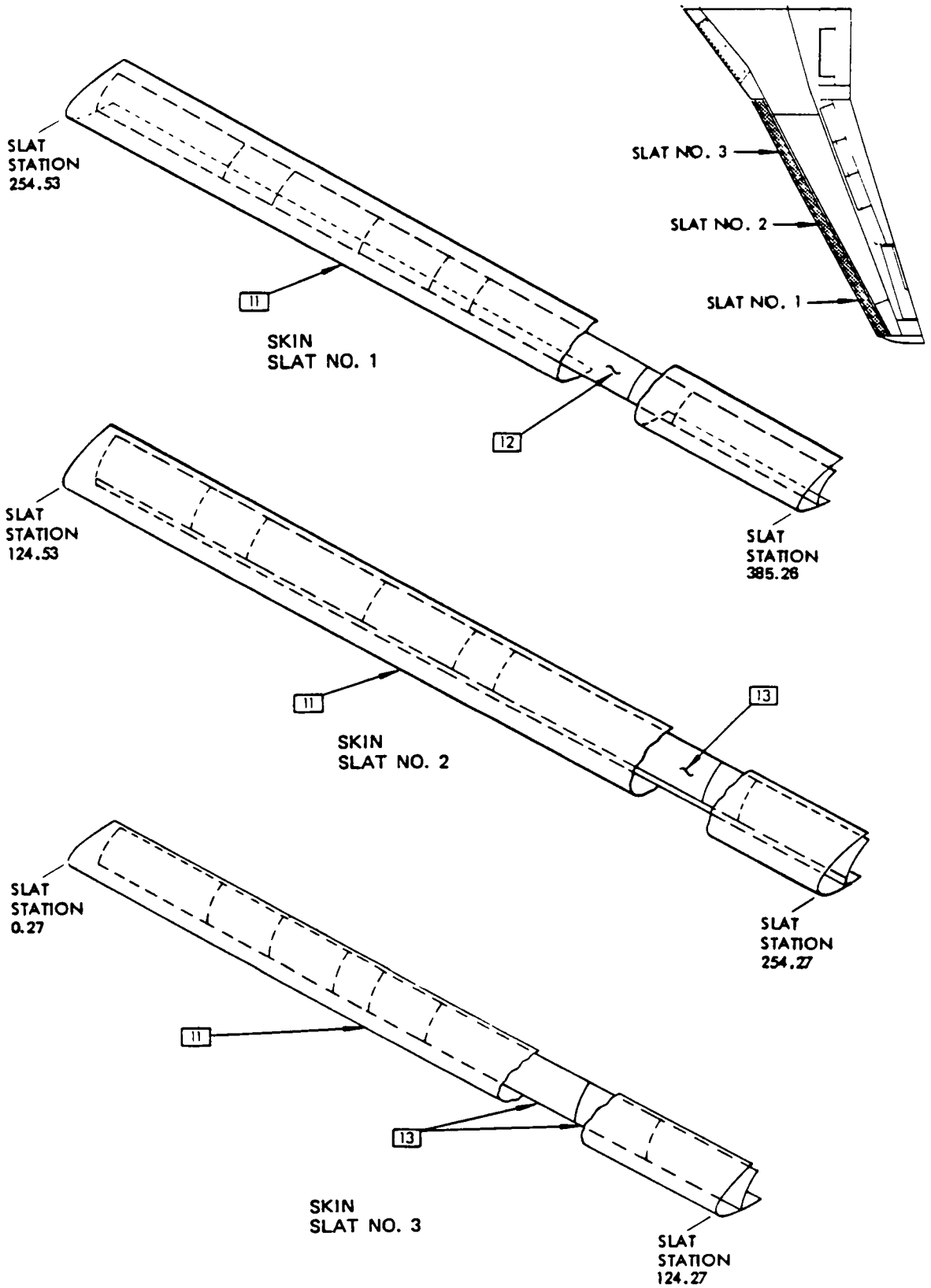

Wing Leading Edge Slats Skin and Structure Identification
Figure 2 (Sheet 3)

REF DWG
65-46421
65-46422
65-46423

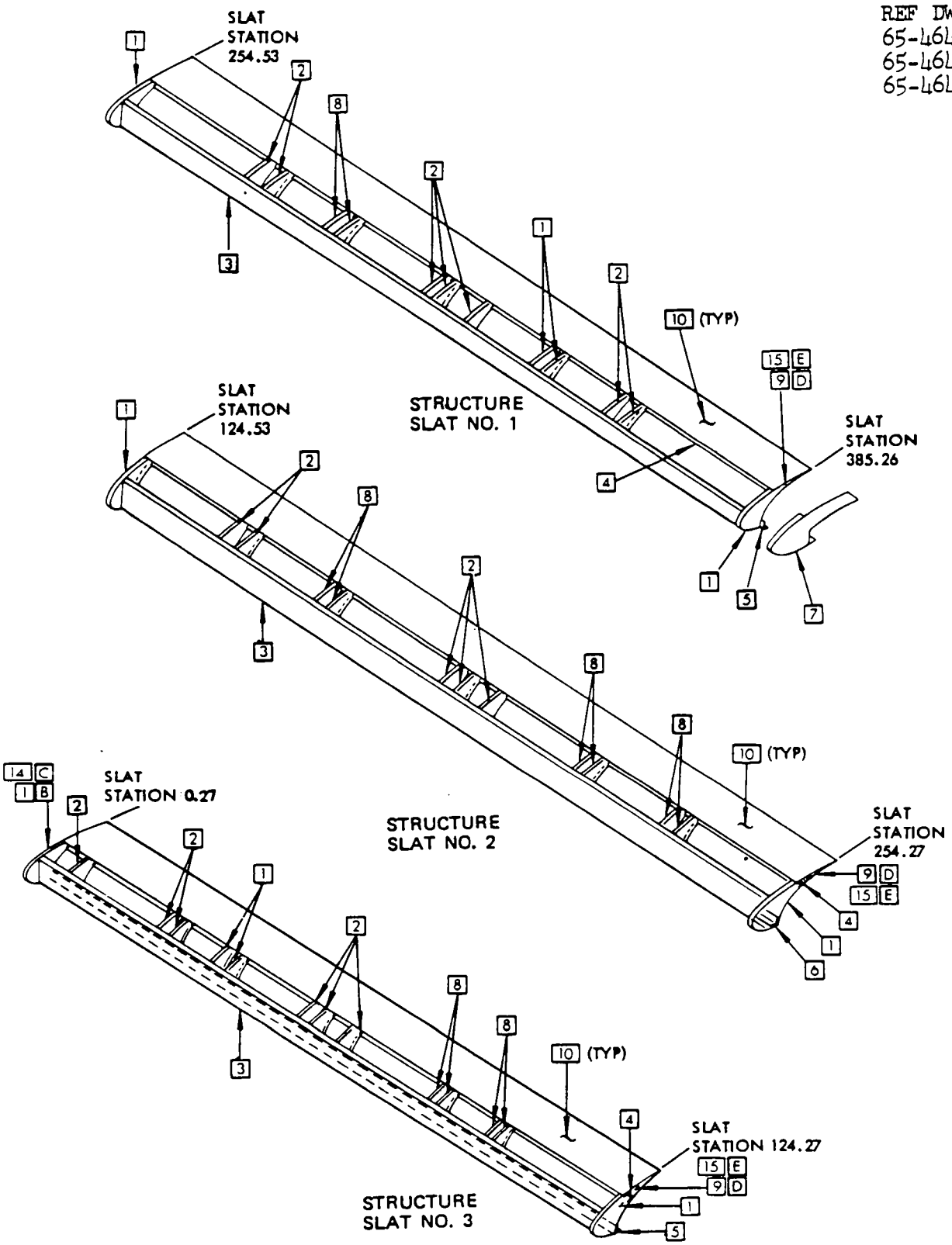

Wing Leading Edge Slats Skin and Structure Identification
Figure 2 (Sheet 4)

ITEM	UPPER CHORD		WEB OR FORMED SECTION		LOWER CHORD	
	MATERIAL	REPAIR FIG. NO.	MATERIAL	REPAIR FIG. NO.	MATERIAL	REPAIR FIG. NO.
1			MACHINED FROM 2024-T351			
2			0.063 CLAD 2024-T4	57-50-4 FIG. 1		
3			MACHINED FROM 7075-T651			
4			BAC1510-773 2024-T3511			
5			0.063 CLAD 2024-T42			
6			MACHINED FROM 7079-T651			
7	BAC1518-284 2024-T3511					
8	AND10136-1701 2024-T3511		0.020 + 0.020 CLAD 2024-T3		AND10136-1701 2024-T3511	
9	AND10138-0504 2024-T3511					
10	AND10136-1701 2024-T3511		0.025 + 0.025 CLAD 2024-T3		AND10134-1205 2024-T3511	
11	AND10136-1701 2024-T3511		0.025 + 0.025 CLAD 2024-T3		AND10136-1701 2024-T3511	
12	BAC1514-1686 2024-T3511		0.020 + 0.020 CLAD 2024-T3		BAC1506-1782 7178-T6511	
13	BAC1506-1781 2024-T3511		0.020 + 0.020 CLAD 2024-T3		AND10134-1205 7178-T6	
14			0.032 CLAD 2024-T42			
15	AND10136-1701 2024-T3511		0.063 CLAD 2024-T3		AND10136-1701 2024-T3511	
16			0.050 CLAD 2024-T42			

Trailing Edge Flaps, Skin and Structure Identification
Figure 3 (Sheet 1)

ITEM	UPPER CHORD		WEB OR FORMED SECTION		LOWER CHORD	
	MATERIAL	REPAIR FIG. NO.	MATERIAL	REPAIR FIG. NO.	MATERIAL	REPAIR FIG. NO.
17			0.071 CLAD 2024-T4			
18			0.071 CLAD 7075-T6			
19			0.050 CLAD 2024-T4	57-50-4 FIG. 1		
20			0.063 CLAD 7075-T6			
21	BAC1514-1743 2024-T3511				BAC1514-1702 2024-T3511	
22			0.040 CLAD 7075-T6			
23			0.040 CLAD 2024-T42			
24	BAC1514-1672 2024-T3511 [A] 7075-T6511 [B]				BAC1514-1725 2024-T3511	
25			0.050 CLAD 2024-T3 DOUBLER			
26			0.063 CLAD 2024-T3 DOUBLER			
27			0.050 CLAD 7075-T6			
28	BAC1514-1704 7178-T6511				BAC1503-100240 2024-T3511	
29			0.071 CLAD 2024-T42			
30			0.050 CLAD 7075-T6			
31			7075-T73 FORGING			

Trailing Edge Flaps, Skin and Structure Identification
Figure 3 (Sheet 2)

ITEM	UPPER CHORD		WEB OR FORMED SECTION		LOWER CHORD	
	MATERIAL	REPAIR FIG. NO.	MATERIAL	REPAIR FIG. NO.	MATERIAL	REPAIR FIG. NO.
32	BAC1518-284 7075-T6					
33			0.063 CLAD 2024-T3		BAC1503-100046 2024-T3511	
34	BAC1505-100052 2024-T3511		0.020 + 0.020 CLAD 2024-T3		BAC1503-100096 2024-T3511	
35	BAC1505-100052 2024-T3511		0.020 + 0.020 CLAD 2024-T3		AND10136-2001 2024-T3511	
36			0.063 CLAD 2024-T3			
37			0.040 + 0.032 CLAD 2024-T3			
38			0.063 + 0.063 CLAD 2024-T3			
39			0.040 CLAD 2024-T3			
40			0.016 + 0.016 CLAD 2024-T3			
41			0.020 + 0.020 CLAD 2024-T3			
42			MACHINED FROM 0.125 CLAD 7075-T6			
43			DELETED			
44			HONEYCOMB PANEL 0.016 CLAD 2024-T4 UPPER SKIN AND 0.032 CLAD 2024-T3 LOWER SKIN, CORE TYPE 3-10N BMS 4-4	51-40-6 FIG. 1 THRU 21		

Trailing Edge Flaps, Skin and Structure Identification
Figure 3 (Sheet 3)

ITEM	UPPER CHORD		WEB OR FORMED SECTION		LOWER CHORD	
	MATERIAL	REPAIR FIG. NO.	MATERIAL	REPAIR FIG. NO.	MATERIAL	REPAIR FIG. NO.
45			DELETED			
46			HONEYCOMB PANEL 0.016 5052-H34 UPPER AND LOWER SKINS, CORE TYPE 4-10N, BMS 4-4, EXCEPT THE ALLOY SHALL BE 5056-H36	51-40-6 FIG. 1 THRU 21		
47			0.025 + 0.025 CLAD 7075-T6			
48			0.016 CLAD 2024-T3 DOUBLER UPPER AND LOWER			
49			MACHINED FROM 7075-T7351			
50			0.032+ 0.032 + 0.063 CLAD 7075-T6			
51			0.063 CLAD 2024-T3		BAC1503-3471 2024-T3511	
52			HONEYCOMB PANEL 0.025 + 0.025 CLAD 2024-T3 UPPER AND LOWER SKINS, CORE TYPE 3-10N BMS 4-4	51-40-6 FIG. 1 THRU 21		
53			0.025 + 0.025 CLAD 2024-T3			
54	7075-T7351					
55	TRACK FITTING FORGING 7075-T73 K					
56	FLAP TRACK SUPPORT FORGING 7075-T73 K					

Trailing Edge Flaps, Skin and Structure Identification
Figure 3 (Sheet 4)

ITEM	UPPER CHORD		WEB OR FORMED SECTION		LOWER CHORD	
	MATERIAL	REPAIR FIG. NO.	MATERIAL	REPAIR FIG. NO.	MATERIAL	REPAIR FIG. NO.
57	PUSHROD ATTACH FITTING FORGING 7075-T73					
58	HONEYCOMB CORE 3-10N BMS 4-4					
59	REMOVED					
60	HONEYCOMB PANEL 0.016 5052-H34 UPPER SKIN AND 0.016 CLAD 2024-T3 LOWER SKIN, CORE 3-10N BMS 4-4	51-40-6 FIG. 1 THRU 21				
61	REMOVED					
62	HONEYCOMB PANEL 0.016 CLAD 2024-T3 UPPER SKIN AND LOWER SKIN, CORE TYPE 3-10N BMS 4-4, EXCEPT THE ALLOY SHALL BE 5056-H36	51-40-6 FIG. 1 THRU 21				
63	HONEYCOMB PANEL 0.016 CLAD 2024-T3 UPPER SKIN AND LOWER SKIN, CORE TYPE 3-10N BMS 4-4	51-40-6 FIG. 1 THRU 21				
64	REMOVED					
65	HONEYCOMB PANEL LAMINATED 0.020 + 0.020 CLAD 2024-T3 UPPER AND LOWER SKIN, CORE TYPE 3-10N BMS 4-4	51-40-6 FIG. 1 THRU 21				

Trailing Edge Flaps, Skin and Structure Identification
Figure 3 (Sheet 5)

ITEM	UPPER CHORD		WEB OR FORMED SECTION		LOWER CHORD	
	MATERIAL	REPAIR FIG. NO.	MATERIAL	REPAIR FIG. NO.	MATERIAL	REPAIR FIG. NO.
66	DIMPLED PLATE 0.040 CRES					
67	SERRATED PLATE 0.080 CRES 17-4PH 180-200 KSI					
68	SERRATED PLATE 0.080 7075-T6					
69	INBOARD TOP SKIN 0.112 CLAD 2024-T3					
70	FITTING 17-4PH CASTING					
71	GLASS FABRIC REINFORCED EPOXY LAMINATE					
72	0.016 ELECTRO FORMED NICKEL CHANNEL BMS 7-207					
73	0.016 CRES 17-7PH					
74	0.10 CRES TYPE 301 1/2 HARD					
75	BAC1506-1811 7178-T6511				BAC1505-100566 2024-T3511	
76	BAC1506-1811 7178-T6511				BAC1505-100566 2024-T8511	
77	HONEYCOMB PANEL 0.016 CLAD 2024-T3 UPPER SKIN AND LOWER SKIN, CORE TYPE 3-15N BMS 4-4, EXCEPT THE ALLOY SHALL BE 5056-H36	51-40-6 FIG. 1 THRU 21				
78	BAC1506-1780 2024-T3511				BAC1505-100599 7178-T6511 OPTIONAL: BAC1505-100558 7178-T6511 V	

Trailing Edge Flaps, Skin and Structure Identification
Figure 3 (Sheet 6)

NOTES

[A] FOR CUM LINE NUMBERS: 1 THRU 28

[B] FOR CUM LINE NUMBERS: 29 AND ON

[C] DELETED

[D] FOR CUM LINE NUMBERS: 1, 139 THRU 145, 147, 149, 152 THRU 170, 172, 173, 176 THRU 178, 180 THRU 182, 184, 188 THRU 190, 192 THRU 196, 199, 203 THRU 205, 207 THRU 209, 212 AND ON, AND OTHER AIRPLANES AFTER INCORPORATION OF SB 57-1029

[E] FOR CUM LINE NUMBERS: 72, 84, 102, 139, 157, 242, 249

[F] FORGINGS OF 7075-T651 MATERIAL HAVE BEEN REPLACED BY FORGINGS OF 7075-T73 IN PRODUCTION AND CAN BE REPLACED RETROACTIVELY BY INCORPORATING SB 57-1044

[G] DELETED

[H] FOR AIRPLANES WITH GRAVEL DEFLECTORS. UNDERSIDE HAS TWO PLYS OF FIBERGLASS CLOTH. FOUR ADDITIONAL PLIES FOR GRAVEL PROTECTION ON TRAILING EDGE 60.00 INCHES FROM INBOARD EDGE

[I] FORGINGS OF 7079-T651 MATERIAL HAVE BEEN REPLACED BY FORGINGS OF 7075-T73 IN PRODUCTION AND CAN BE REPLACED RETROACTIVELY BY INCORPORATING SB 57-1044

[J] CHORDS OF 7079-T6511 OR 7079-T651 MATERIAL HAVE BEEN SUPERSEDED BY CHORDS OF 7075-T7351 MATERIAL IN PRODUCTION. CHORDS OF 7075-T7351 MATERIAL ARE RECOMMENDED AS REPLACEMENT

[K] FORGINGS OF 7079-T6 MATERIAL HAVE BEEN REPLACED BY FORGINGS OF 7075-T73. 7075-T73 FORGINGS ARE RECOMMENDED WHEN EXISTING STOCKS OF 7079-T6 ARE EXHAUSTED

[L] DELETED

[M] DELETED

[N] FOR CUM LINE NUMBERS: 1 THRU 314

[O] FOR CUM LINE NUMBERS: 315 AND ON

[P] FOR CUM LINE NUMBERS: 2 THRU 138, 146, 148, 150, 151, 171, 174, 175, 179, 183, 185 THRU 187, 191, 197, 198, 200 THRU 202, 206, 210, 211 PRIOR TO INCORPORATION OF SB 57-1029

[Q] DELETED

[R] FOR AIRPLANES WITH WB 57-1076 INCORPORATED

[S] FOR CUM LINE NUMBERS: 277 AND ON AND 1 THRU 276 AFTER INCORPORATION OF SB 57-1057

[T] ON AIRPLANES WHICH HAVE INCORPORATED ADDITIONAL GRAVEL PROTECTION ON THE INBOARD 5 FEET OF THE LOWER SURFACE OF THE AFT FLAP AND ON LEADING EDGE OF SEAL PLATE ASSEMBLY

[U] FOR CUM LINE NUMBERS: 1 THRU 410 PRIOR TO INCORPORATION OF SB 57-1090

[V] FOR CUM LINE NUMBERS: 411 AND ON AND 1 THRU 410 WITH SB 57-1090 INCORPORATED

Trailing Edge Flaps, Skin and Structure Identification
Figure 3 (Sheet 7)

REF DWG
65-73731

NOTES (CONT)

[W] PASSENGER AIRPLANES FROM CUM LINE NUMBER 473 AND 737-200C AIRPLANES FROM CUM LINE NUMBER 520 (BOEING REF: P3725-4399, P4420-4499, P4501-5499, P8941-9995)

[X] FOR AIRPLANES NOT LISTED IN [W]

[Y] FOR ALL AIRPLANES EXCEPT THOSE WITH CUM LINE NUMBERS: 1 THRU 5, 7, 9, 10, 11, 15, 17, 23, 26, 32, 35, 52, 89, 94, 98, 108, 113, 118, 119, 120, 127 (BOEING REF: P0031-P0899, P0911-P2499, P2831-P3499)

[Z] FOR AIRPLANES WITH CUM LINE NUMBERS: 72, 84, 102, 110, 128, 143, 149, 155, 157, 158, 162, 164, 166, 173, 184, 194, 196, 199, 203, 205, 208, 212, 215, 217, 223, 225, 230, 234, 238, 242, 245, 249, 251, 254, 255, 256, 268, 274, 276

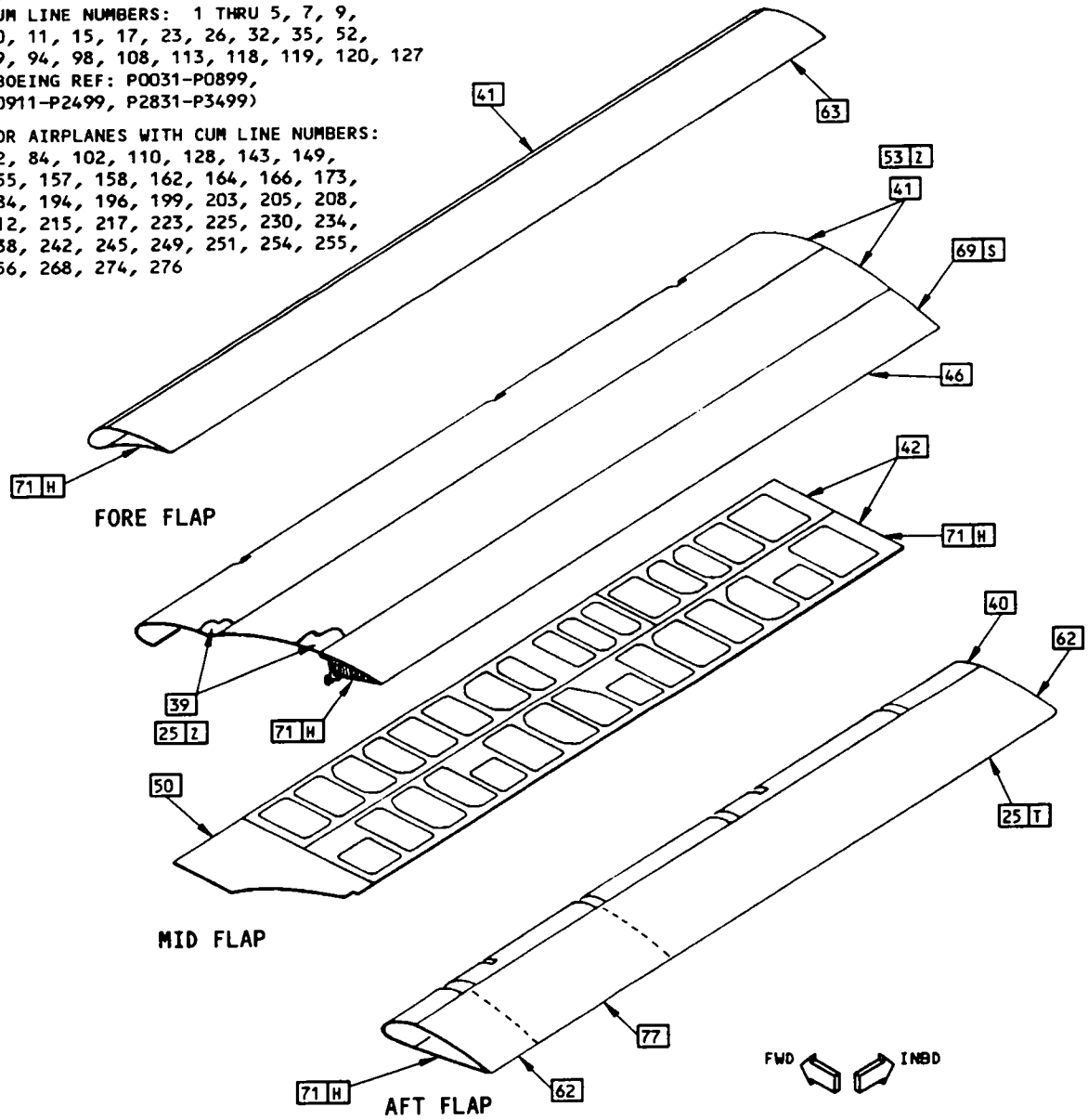

INBOARD FLAPS - SKIN [D] [P]

Trailing Edge Flaps, Skin and Structure Identification
Figure 3 (Sheet 8)

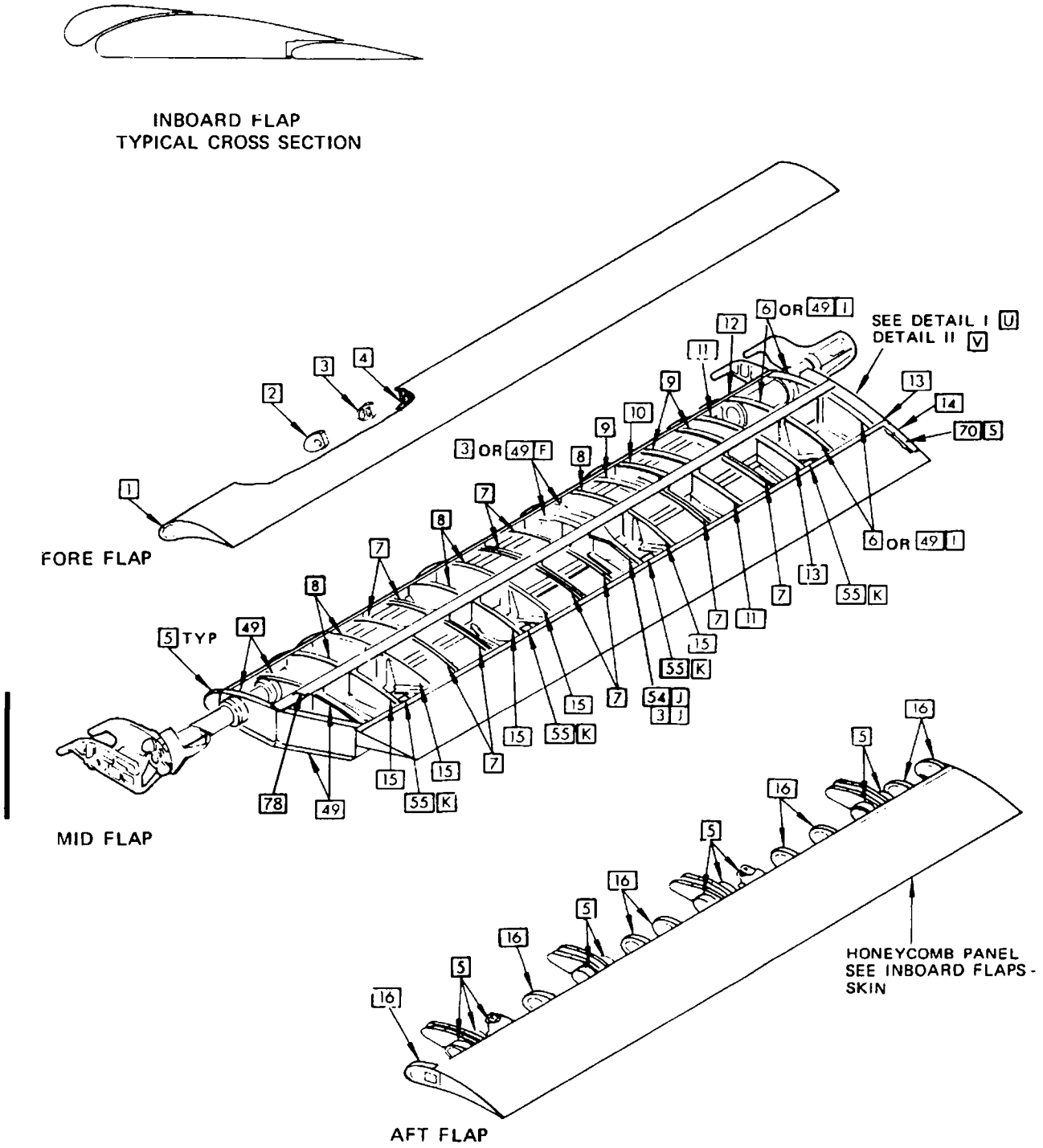

INBOARD FLAPS - STRUCTURE D P

Trailing Edge Flaps, Skin and Structure Identification
Figure 3 (Sheet 9)

REF DWG.
65-71926

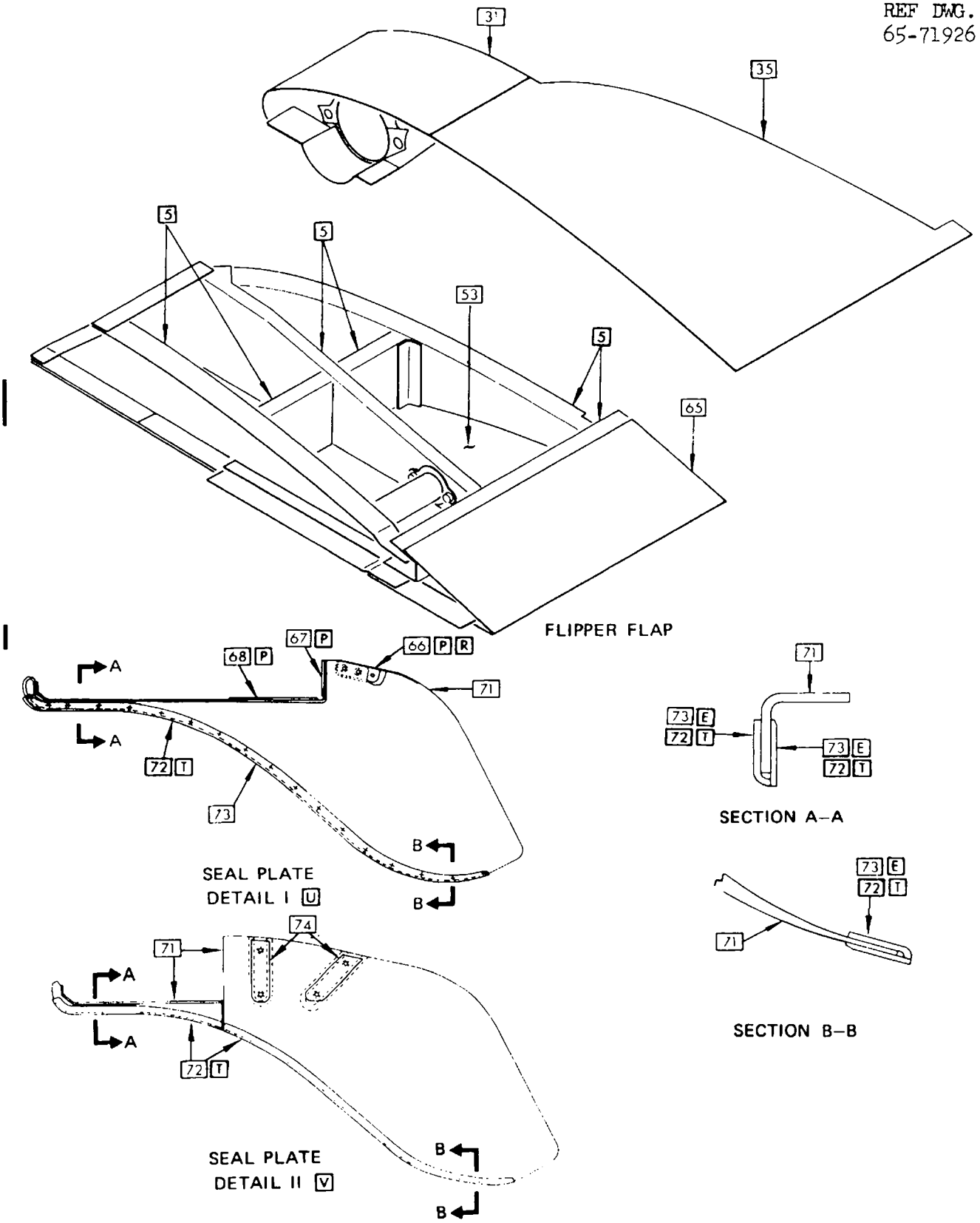

Trailing Edge Flaps, Skin and Structure Identification
Figure 3 (Sheet 10)

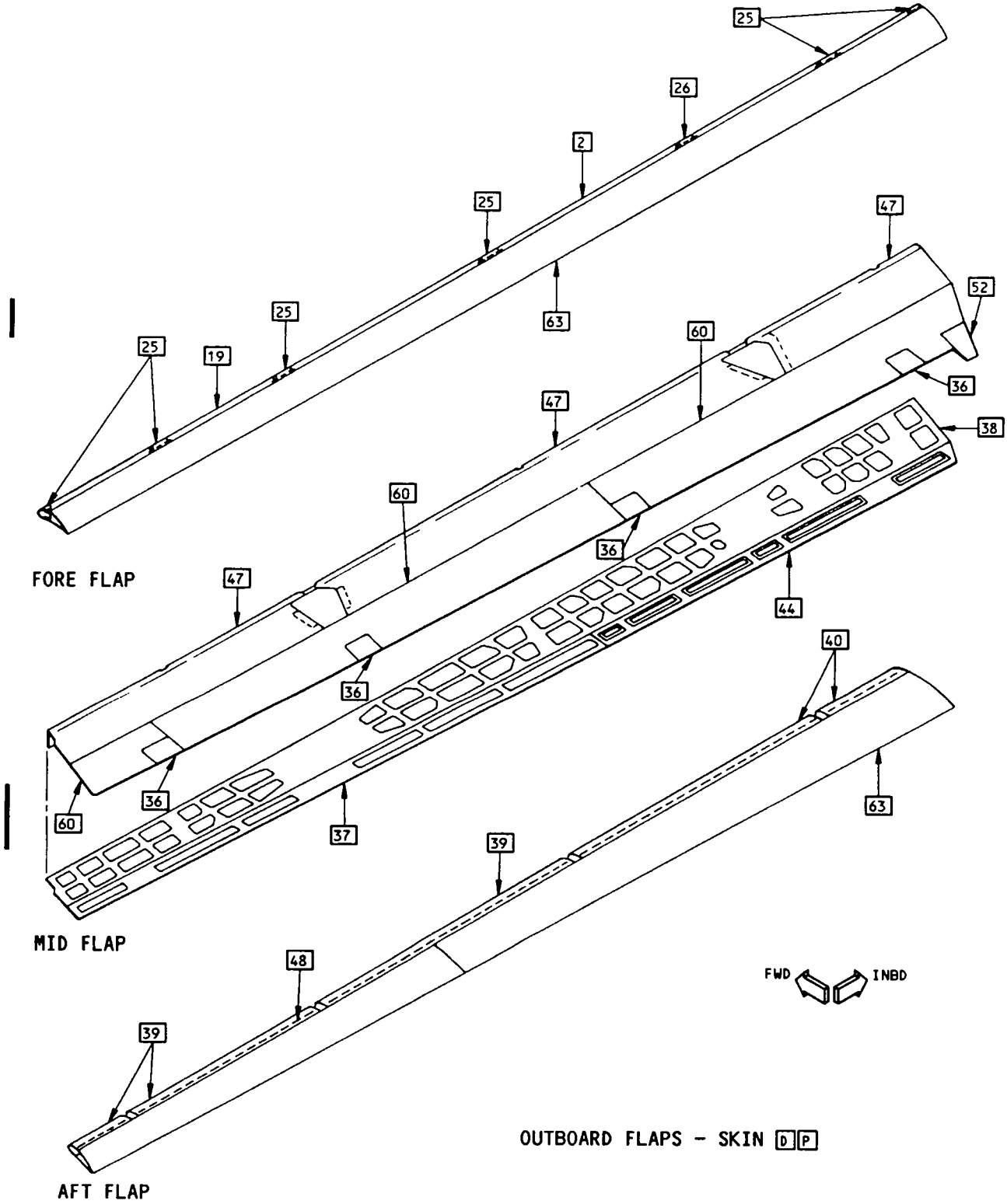

Trailing Edge Flaps, Skin and Structure Identification
Figure 3 (Sheet 11)

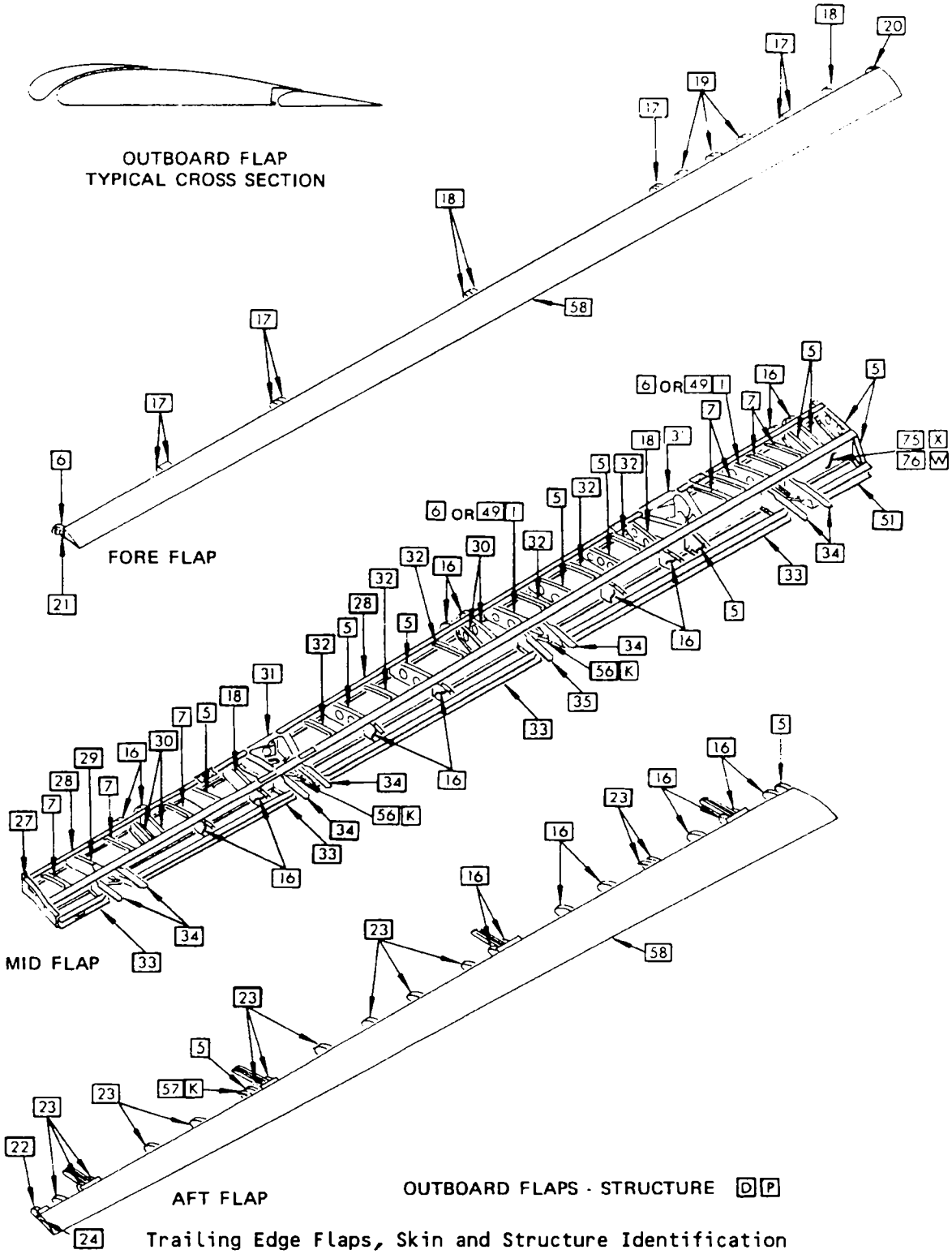

Trailing Edge Flaps, Skin and Structure Identification
Figure 3 (Sheet 12)

REF DWG
65-46454
65-46455

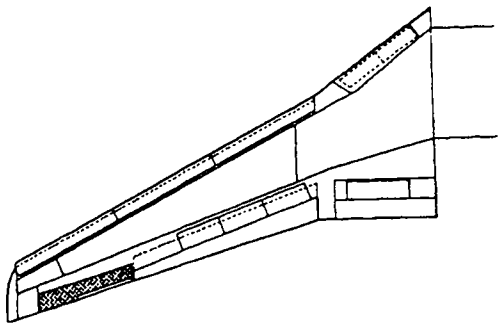

ITEM	MATERIAL	REPAIR FIG. NO.
1	0.063 CLAD 2024-T3	
2	BAC1520-1196 ALUMINUM BRONZE	
3	0.040 CLAD 2024-T4	
4	BAC1520-1195 ALUMINUM BRONZE	
5	0.040 CLAD 2024-T3	
6	0.032 CLAD 2024-T3	
7	0.025 CLAD 2024-T3	
8	0.016 CLAD 2024-T3	
9	GLASS FABRIC HONEYCOMB SANDWICH CORE: BMS 8-124, CLASS I, TYPE II, GRADE 3, SKINS: 3 PLIES, BMS 8-79, TYPE O, CLASS 1 F	51-40-9 FIG. 1

ITEM	MATERIAL	REPAIR FIG. NO.
10	0.020 CLAD 2024-T3	
11	ALUMINUM HONEYCOMB PANEL: 0.012 5052-H34 SKINS. CORE: BMS 4-4 TYPE 4-10N BUT ALLOY IS 5056-H38 OR H39	51-40-6 PAR. 11, FIG. 11 THRU FIG. 21
12	0.025 CLAD 7075-T6	
13	BAC1514-1689 7075-T6511	
14	0.032 CLAD 2024-T4	
15	BAC1519-129 BRONZE	
16	TUBING 1.31 DIA 0.028 WALL 2024-T3	
17	ALUMINUM HONEYCOMB PANEL 0.012 5052-H34 SKINS. CORE: BMS 4-4F (AND ANY SUB-SEQUENT REVISIONS) TYPE 4-10N 5056-H38 OR H39	51-40-6 PAR. 11, FIG. 11 THRU FIG. 21

Aileron Skin and Structure Identification
(Glass Fabric/Metal Aileron)
Figure 4 (Sheet 1)

NOTES

- THIS FIGURE APPLIES TO GLASS FABRIC/METAL AILERONS DELIVERED ON 737-100 AND 737-200 AIRPLANES, CUM LINE NUMBERS: 1 THRU 1000, 1002, 1004 THRU 1006, 1008 THRU 1011, 1014, 1016, 1017, 1059, 1135, 1143, 1151, 1154, 1155, 1165, 1167, 1176, 1178, 1223, 1226, 1236
- UPPER AND LOWER SKINS IDENTICAL UNLESS OTHERWISE NOTED

[A] FOR CUM LINE NUMBERS: 130 THRU 1000, 1002, 1004 THRU 1006, 1008 THRU 1011, 1014, 1016, 1017, 1019

[B] DELETED

[C] FOR CUM LINE NUMBERS: 1 THRU 315

[D] FOR CUM LINE NUMBERS: 350 THRU 1000, 1002, 1004 THRU 1006, 1008 THRU 1011, 1014, 1016, 1017, 1059, 1143, 1151, 1154, 1155, 1165, 1167, 1176, 1178. 1223, 1226, 1236

[E] DELETED

[F] 250°F (121°C) CURE AT MANUFACTURE

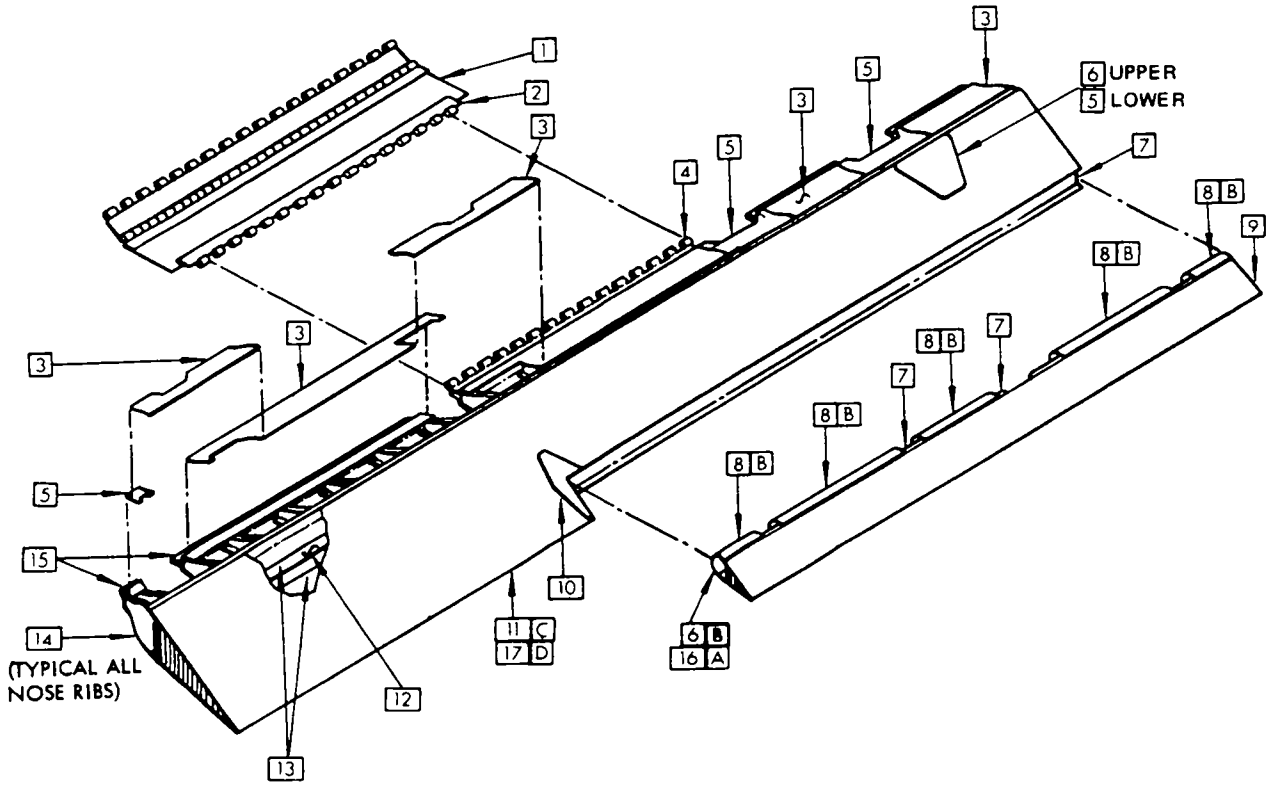

Aileron Skin and Structure Identification
(Glass Fabric/Metal Aileron)
Figure 4 (Sheet 2)

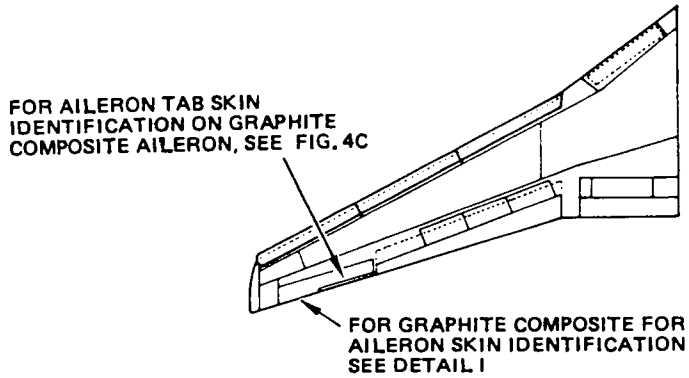

NOTES

THIS FIGURE APPLIES TO GRAPHITE COMPOSITE AILERONS ON 737-200 AIRPLANES, CUM LINE NUMBERS:
1003, 1012, 1013, 1018 THRU 1021, 1023 THRU 1028, 1031 THRU 1036, 1038 THRU 1042, 1044 THRU 1047, 1049, 1050, 1051, 1053 THRU 1056, 1058, 1060 THRU 1062, 1064 THRU 1068, 1070 THRU 1072, 1074, 1075, 1077 THRU 1079, 1081, 1082, 1084 THRU 1086, 1088, 1089, 1091, 1093, 1095, 1097, 1099, 1102, 1105, 1109, 1113, 1117, 1120, 1186, 1189, 1194, 1197, 1199, 1203, 1241, 1245, 1256, 1257, 1261, 1262, 1265, 1266, 1267, 1299, 1313, 1319, 1329, 1342, 1347, 1361, 1369, 1371, 1379, 1387, 1392, 1397, 1399, 1401, 1403, 1405, 1414, 1415, 1418, 1420, 1422, 1424, 1426, 1453, 1456, 1486, 1523, 1530, 1565, 1579, 1581, 1583, 1585

A PLY ORIENTATION CONVENTION: THE PLY ORIENTATION OF EACH PLY IS DESIGNATED BY A NUMBER (IN DEGREES) REPRESENTING THE ORIENTATION OF THE AXIS PARALLEL TO THE DIRECTION OF FILAMENTS (IN TAPE) OR LONGITUDINALLY ORIENTED YARN (IN A WOVEN FABRIC) WITH RESPECT TO A REFERENCE AXIS. 0 DEGREES IS THE REFERENCE AXIS. THE DIRECTION OF LONGITUDINAL YARN IN A WOVEN FABRIC IS CALLED THE WARP DIRECTION

B MATERIAL AND PLY ORIENTATION ARE ALWAYS SHOWN FOR FIELD AREAS. SEE BOEING DRAWINGS FOR EDGE BANDS AND AREAS WITH DOUBLERS WHENEVER THEY ARE NOT SHOWN IN THE MANUAL AS ADJUNCTS TO FIELD AREAS

C PREPREG GRAPHITE TAPE PER BMS 8-212, CLASS I, TYPE II, GRADE 95

D PREPREG GRAPHITE FABRIC PER BMS 8-212 CLASS II, TYPE 1V, STYLE 3K-70-PW

E PREPREG GLASS FABRIC PER BMS 8-139, TYPE 120

F CORE RIBBON DIRECTION - TYPICAL, EXCEPT AS SHOWN

G 350°F (177°C) CURE AT MANUFACTURE

Aileron Skin Identification
(Graphite Composite Aileron)
Figure 4A (Sheet 1)

REF DWG
65C25911

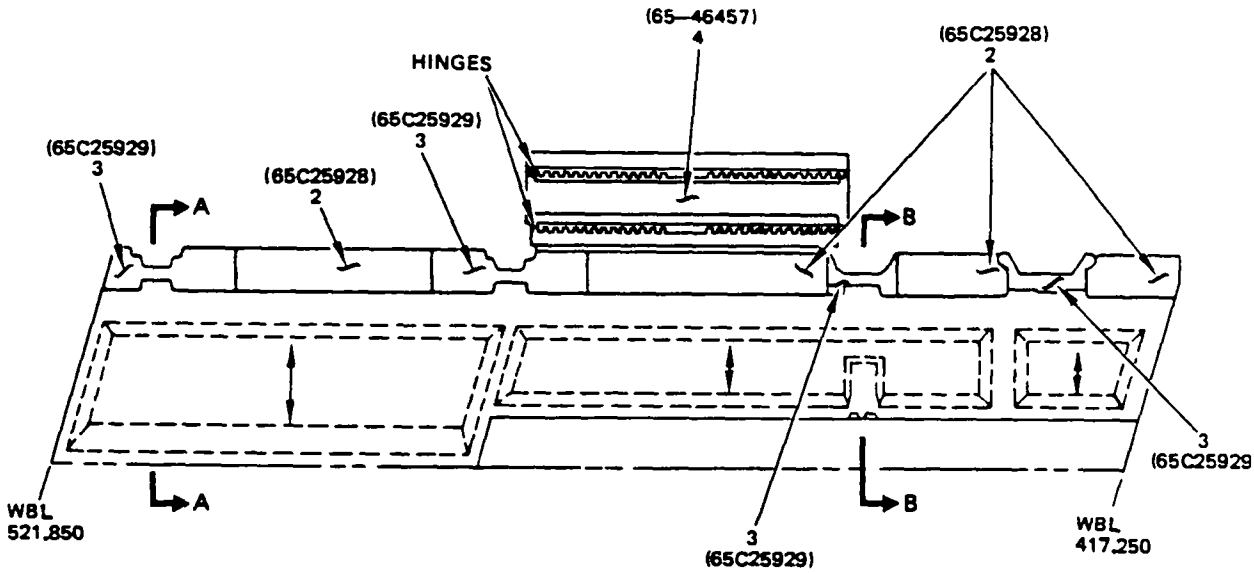

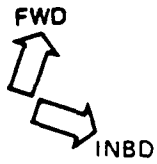

PLAN VIEW
DETAIL I

Aileron Skin Identification
(Graphite Composite Aileron)
Figure 4A (Sheet 2)

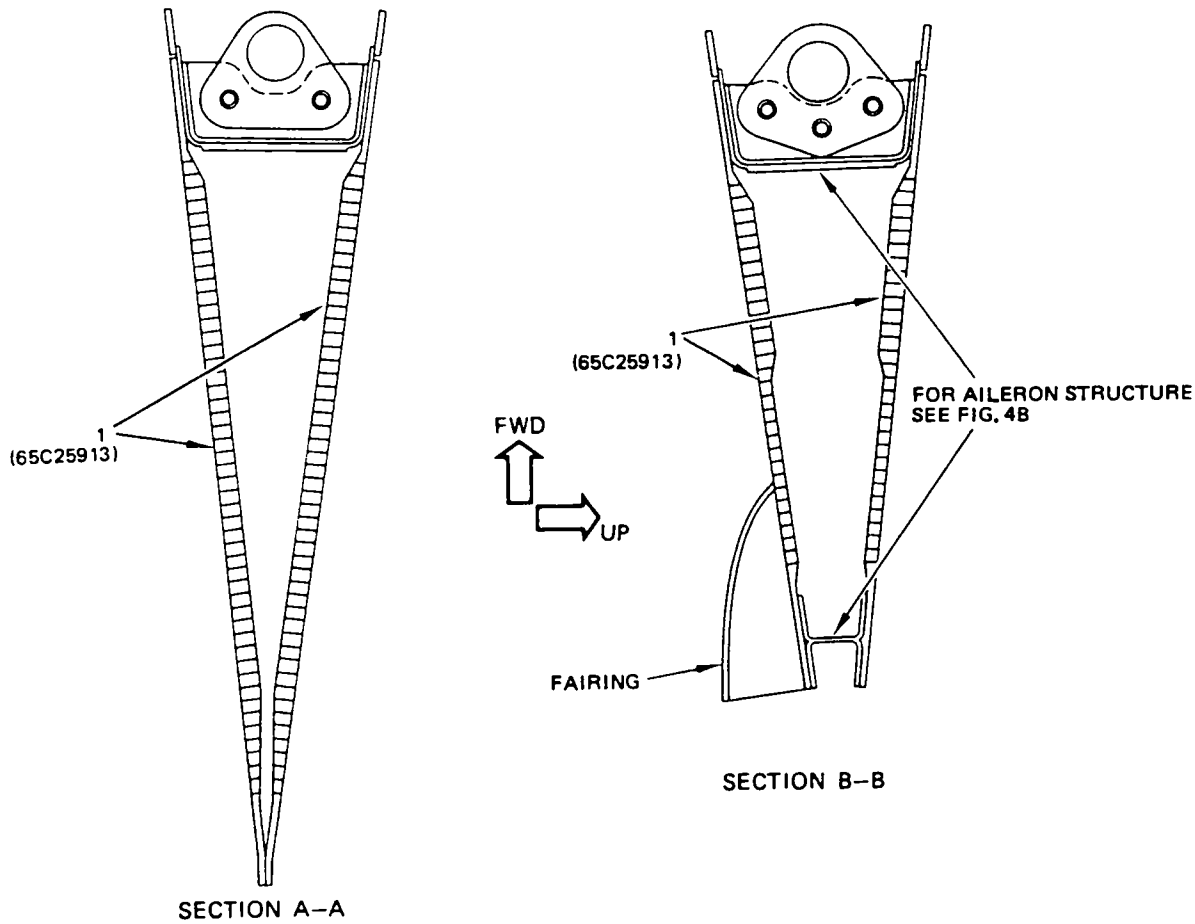

ITEM	DESCRIPTION	GAGE	MATERIAL	EFFECTIVITY
1	SKIN PANEL - BOND ASSY - UPR, LWR SKIN CORE		GRAPHITE/EPOXY HONEYCOMB SANDWICH SEE DETAIL II G NON - METALLIC HONEYCOMB PER BMS 8-124, CLASS IV, TYPE V, GRADE 3.0	
2	NOSE SKIN PANEL SKIN		GLASS/GRAPHITE/EPOXY LAMINATE SEE DETAIL III G	
3	NOSE COVER PANEL SKIN		GLASS/GRAPHITE/EPOXY LAMINATE SEE DETAIL III G	
4	BALANCE PANEL	0.063	CLAD 2024-T3	

LIST OF MATERIALS FOR DETAIL I, SECTION A–A, SECTION B–B

Aileron Skin Identification
(Graphite Composite Aileron)
Figure 4A (Sheet 3)

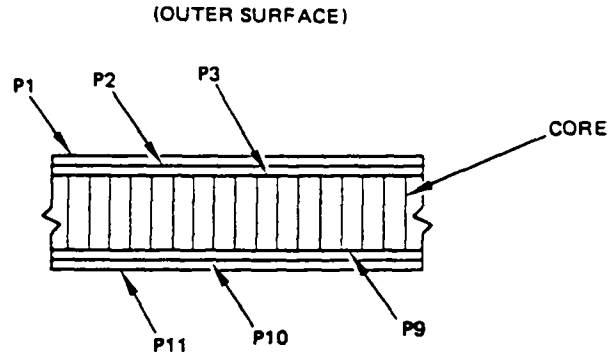

TYPICAL SECTION THRU HONEYCOMB PANEL

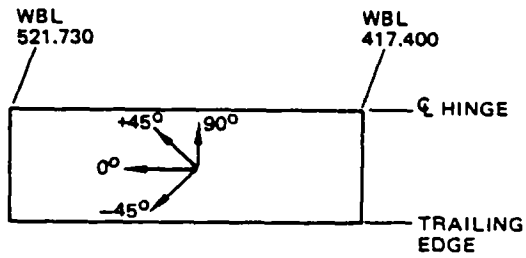

VIEW ON PANEL A

ITEM	PLY NO	MATERIAL	PLY ORIENTATION
1	P1, P11 P2, P10 P3, P9	C	0° +45° –45°

PLY TABLE FOR PANEL B

DETAIL II

Aileron Skin Identification
(Graphite Composite Aileron)
Figure 4A (Sheet 4)

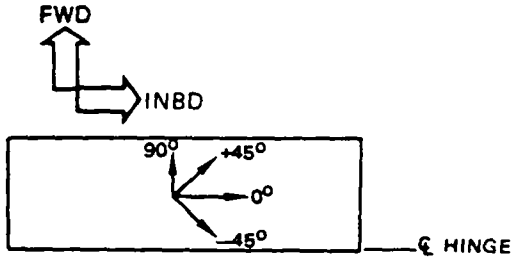

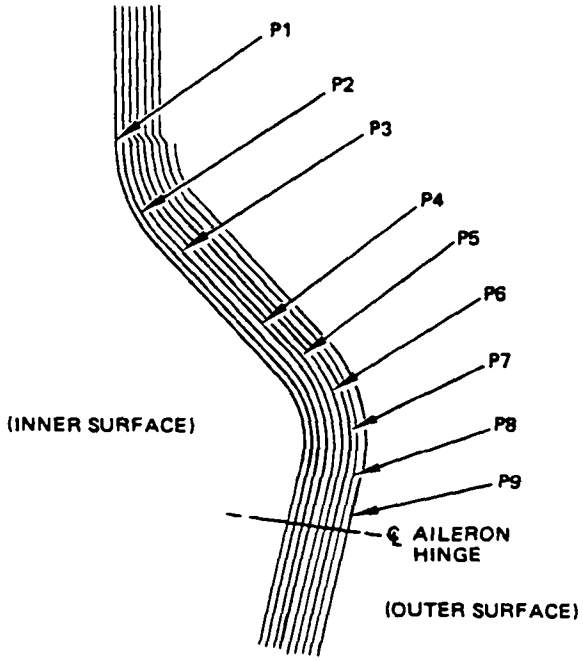

TYPICAL SECTION THRU NOSE SKIN LAMINATE AND NOSE COVER PANEL

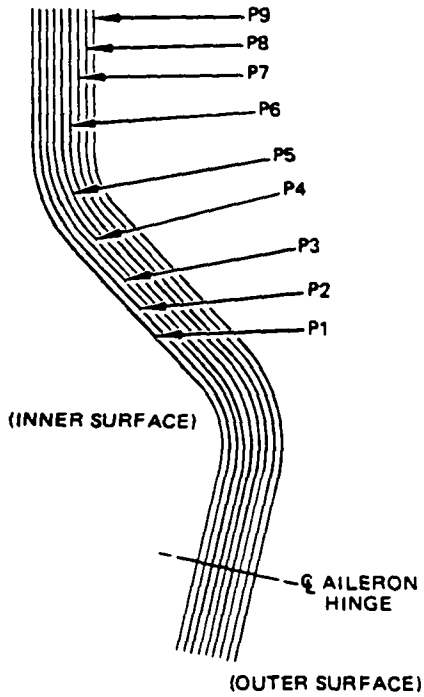

SECTION THRU NOSE COVER LAMINATE WING STA 538.783

ITEM	PLY NO.	MATERIAL	PLY ORIENTATION
2	P1	E	OPTIONAL
	P3, P5, P6, P8	D	0° OR 90°
	P2, P4, P7, P9	D	± 45°

PLY TABLE FOR NOSE SKIN AND NOSE COVER PANEL

DETAIL III

Aileron Skin Identification
(Graphite Composite Aileron)
Figure 4A (Sheet 5)

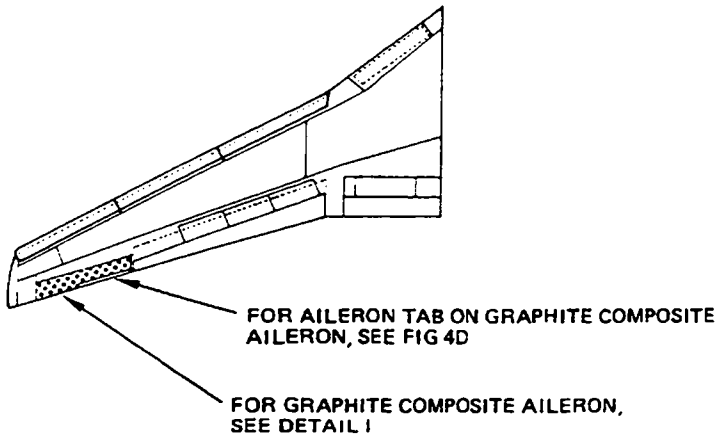

NOTES

- THIS FIGURE APPLIES TO GRAPHITE COMPOSITE AILERONS ON 737-200 AIRPLANES, CUM LINE NUMBERS: 1003, 1012, 1013, 1018 THRU 1021, 1023 THRU 1028, 1031 THRU 1036, 1038 THRU 1042, 1044 THRU 1047, 1049, 1050, 1051, 1053 THRU 1056, 1058, 1060 THRU 1062, 1064 THRU 1068, 1070 THRU 1072, 1074, 1075, 1077 THRU 1079, 1081, 1082, 1084 THRU 1086, 1088, 1089, 1091, 1093, 1095, 1097, 1099, 1102, 1105, 1109, 1113, 1117, 1120, 1186, 1189, 1194, 1197, 1199, 1203, 1241, 1245, 1256, 1257, 1261, 1262, 1265, 1266, 1267, 1299, 1313, 1319, 1329, 1342, 1347, 1361, 1369, 1371, 1379, 1387, 1392, 1397, 1399, 1401, 1403, 1405, 1414, 1415, 1418, 1420, 1422, 1424, 1426, 1453, 1456, 1486, 1523, 1530, 1565, 1579, 1581, 1583, 1585

[A] PREPREG GRAPHITE FABRIC PER BMS 8-212, CLASS II, TYPE IV, STYLE 3K-70-PW

[B] PREPREG GRAPHITE TAPE PER BMS 8-212, CLASS I, TYPE II, GRADE 190

[C] PREPREG GRAPHITE TAPE PER BMS 8-212, CLASS I, TYPE II, GRADE 95

[D] PREPREG GLASS FABRIC PER BMS 8-139 TYPE 120

[E] 350°F (177°C) CURE AT MANUFACTURE

Aileron Structure Identification
(Graphite Composite Aileron)
Figure 4B (Sheet 1)

REF DWG
65C25911
65C25914

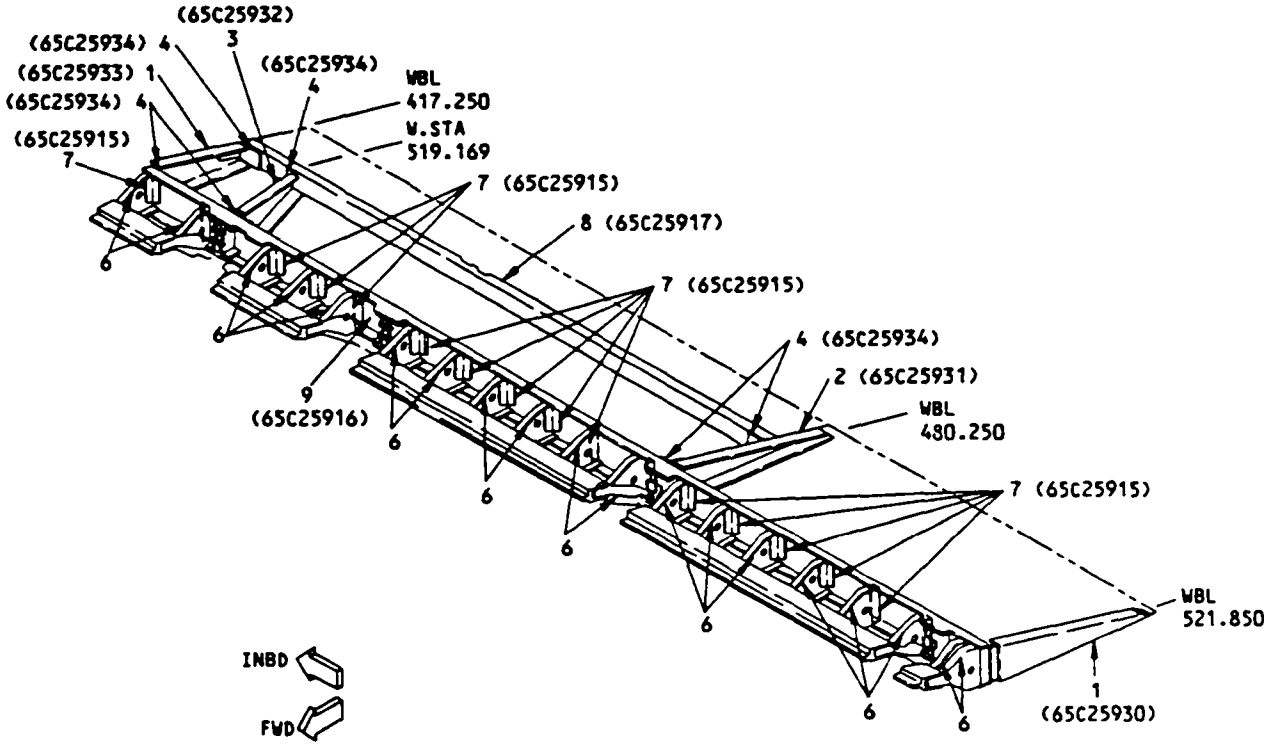

DETAIL I

LIST OF MATL

Aileron Structure Identification (Graphite Composite Aleron
Figure 4B (Sheet 2)

ITEM	DESCRIPTION	GAGE	MATERIAL	EFFECTIVITY
1	CLOSURE RIB-INBOARD, SKIN		GRAPHITE/EPOXY LAMINATE SEE DETAIL II E	
2	INSPAR RIB SKIN		GRAPHITE/EPOXY LAMINATE SEE DETAIL III E	
3	INSPAR RIB SKIN		GRAPHITE/EPOXY LAMINATE SEE DETAIL IV E	
4	INSPAR RIB POST-BOND ASSY SKIN		GRAPHITE/EPOXY LAMINATE SEE DETAIL V E	
5	INSPAR RIB POST-BOND ASSY SKIN		GRAPHITE/EPOXY LAMINATE SEE DETAIL VI E	
6	NOSE RIB	0.040	CLAD 2024-T42	
7	NOSE RIB POST - BOND ASSY SKIN		GRAPHITE/EPOXY LAMINATE SEE DETAIL VII E	
8	REAR SPAR - BOND ASSY SKIN		GRAPHITE/EPOXY LAMINATE SEE DETAIL VIII E	
9	FRONT SPAR-BOND ASSY SKIN		GRAPHITE/EPOXY LAMINATE SEE DETAIL IX E	

List of Materials For Detail I,

Aileron Structure Identification
(Graphite Composite Aileron)
Figure 4B (Sheet 3)

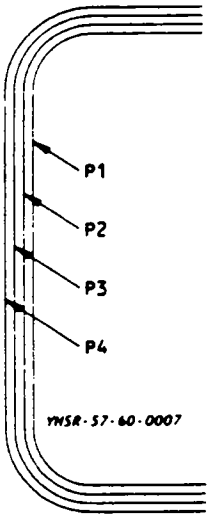

TYPICAL SECTION THRU INBD CLOSURE
RIB LAMINATE - WBL 417.283

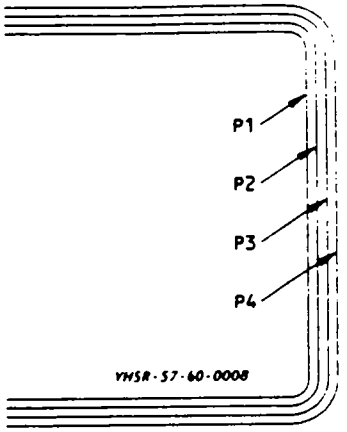

TYPICAL SECTION THRU OUTBD CLOSURE
RIB LAMINATE - WBL 521.817

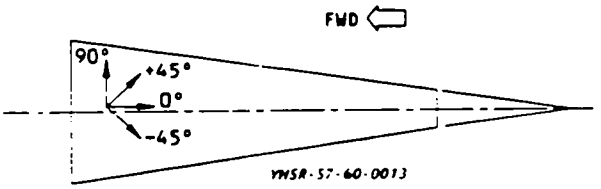

VIEW ON CLOSURE RIBS

ITEM NO.	PLY NO.	MATERIAL	PLY ORIENTATION
1	P1,P4 P2,P3	A	±45° 0° OR 90°

PLY TABLE FOR CLOSURE RIBS

DETAIL II

Aileron Structure Identification (Graphite Composite Aileron)
Figure 4B (Sheet 4)

114785

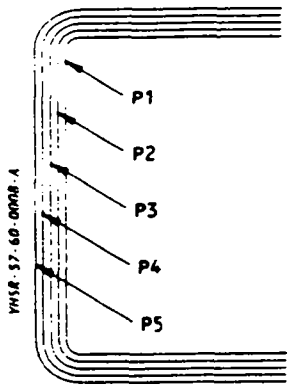

TYPICAL SECTION THRU INSPAR RIB
LAMINATE WING STA 480.342

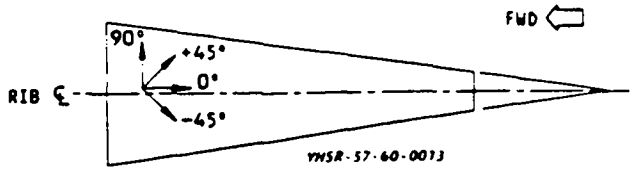

TYPICAL VIEW ON INSPAR RIBS

ITEM NO.	PLY NO.	MATERIAL	PLY ORIENTATION
2	P1,P3 P5 P2,P4	[A]	±45° 0° OR 90°

PLY TABLE FOR INSPAR RIB - WS 480.342

DETAIL III

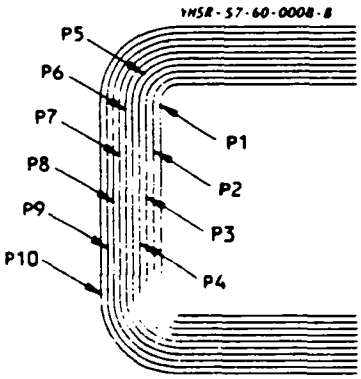

TYPICAL SECTION THRU INSPAR RIB
LAMINATE WING STA 519.169

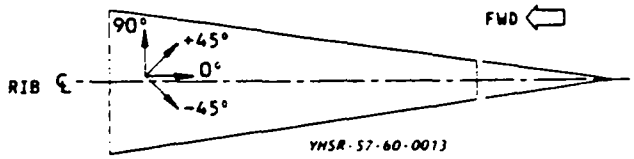

TYPICAL VIEW ON INSPAR RIBS

ITEM NO.	PLY NO.	MATERIAL	PLY ORIENTATION
3	P2,P3, P5,P6, P8,P9 P1,P4, P7,P10	[A]	0° OR 90° ±45°

PLY TABLE FOR INSPAR RIB - WS 519.169

DETAIL IV

Aileron Structure Identification (Graphite Composite Aileron) 1:478c
Figure 4B (Sheet 5)

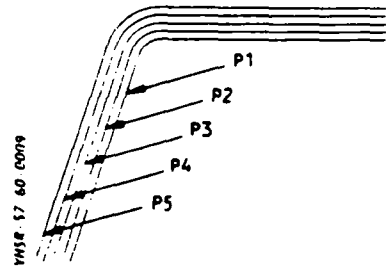

TYPICAL SECTION THRU FWD RIB POST
LAMINATE WING BL 480.342

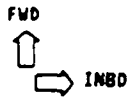

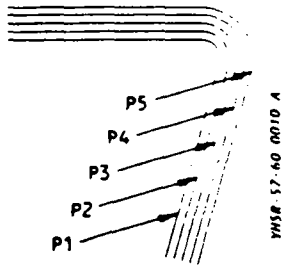

TYPICAL SECTION THRU FWD RIB POST
LAMINATE WING BL 417.283

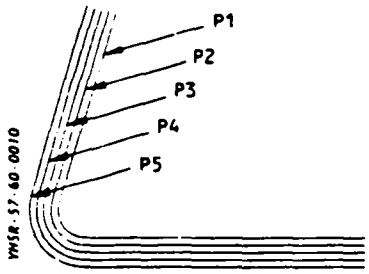

TYPICAL SECTION THRU AFT RIB POST
LAMINATE WING BL 480.342

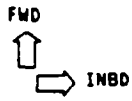

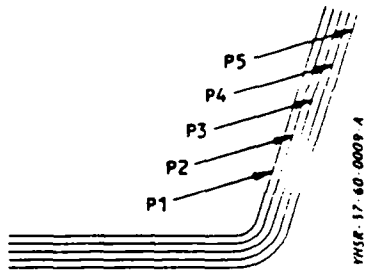

TYPICAL SECTION THRU AFT RIB POST
LAMINATE WING BL 417.283

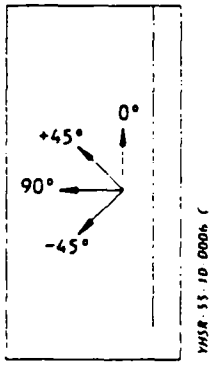

VIEW ON RIB POST

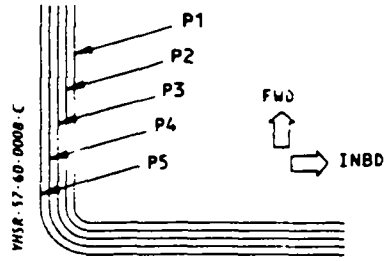

TYPICAL SECTION THRU AFT RIB POST
LAMINATE WING STA 519.169

ITEM NO.	PLY NO.	MATERIAL	PLY ORIENTATION
4	P1,P3 P5 P2,P4	A	±45° 0° OR 90°

PLY TABLE FOR RIB POST

DETAIL V

Aileron Structure Identification (Graphite Composite Aileron)
Figure 4B (Sheet 6)

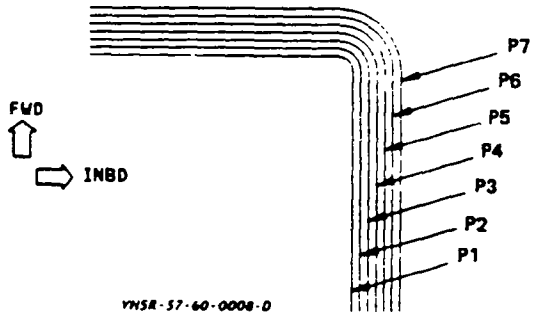

TYPICAL SECTION THRU FWD RIB POST
LAMINATE WING STA 519.169

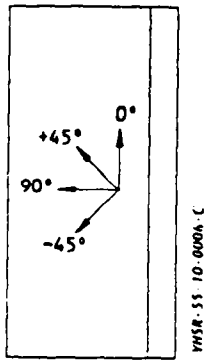

VIEW ON RIB POST

ITEM NO.	PLY NO.	MATERIAL	PLY ORIENTATION
5	P1,P2, P4,P6, P7	A	±45°
	P3,P5		0° OR 90°

PLY TABLE FOR RIB POST WING STA 519.169

DETAIL VI

Aileron Structure Identification (Graphite Composite Aileron)
Figure 4B (Sheet 7)

114737

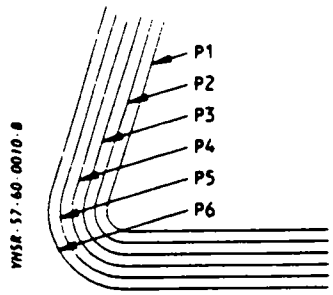

TYPICAL SECTION THRU NOSE RIB POST
LAMINATE WING STA 613.123

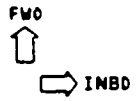

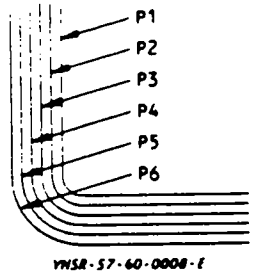

TYPICAL SECTION THRU NOSE RIB POST
LAMINATE WING STA 507.569-608.123

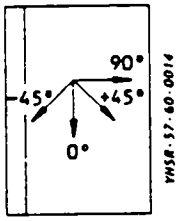

VIEW ON RIB POST

ITEM NO.	PLY NO.	MATERIAL	PLY ORIENTATION
7	P1,P3, P5	A	±45°
	P2,P4		0° OR 90°
	P6	B	OPTIONAL

PLY TABLE FOR RIB POST

DETAIL VII

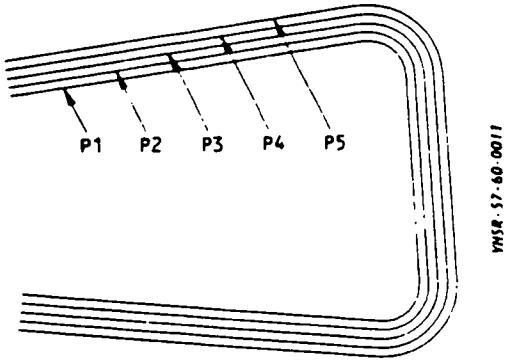

TYPICAL SECTION THRU REAR SPAR
LAMINATE WING BL 417.250-480.250

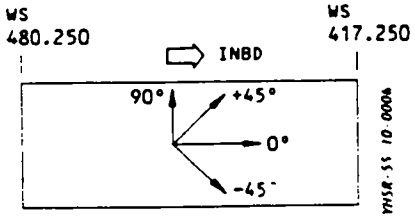

VIEW ON REAR SPAR

ITEM NO.	PLY NO.	MATERIAL	PLY ORIENTATION
	P1	D	OPTIONAL
8	P2,P5	B	+45°
	P3,P4		-45°

PLY TABLE FOR REAR SPAR

DETAIL VIII

Aileron Structure Identification (Graphite Composite Aileron)
Figure 4B (Sheet 8)

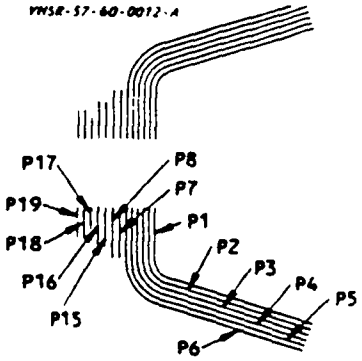

SECTION THRU FRONT SPAR LAMINATE AT ACCESS COVER LOCATION - WS 580.698

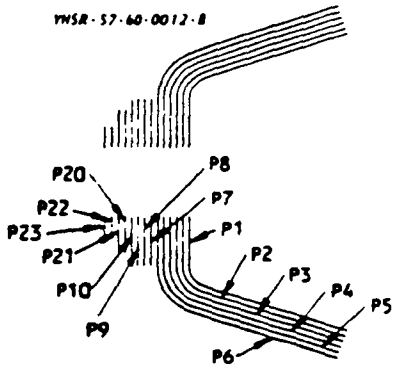

SECTION THRU FRONT SPAR LAMINATE AT ACCESS COVER LOCATION - WS 545.698

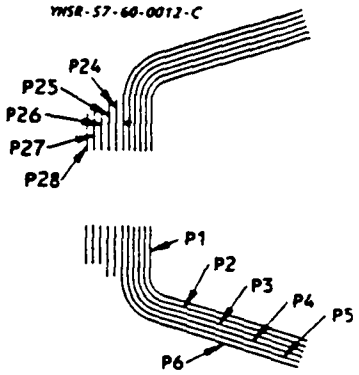

SECTION THRU FRONT SPAR LAMINATE AT ACCESS COVER LOCATION - WS 512.319

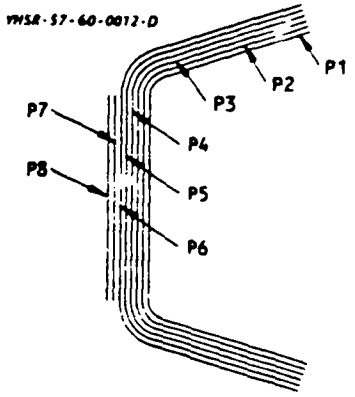

SECTION THRU FRONT SPAR LAMINATE BETWEEN WS 516.11-WS 535.069 AND 576.619 - 609.819

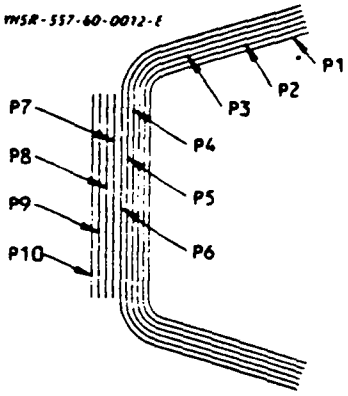

SECTION THRU FRONT SPAR LAMINATE BETWEEN WS 535.069 AND WS 576.619

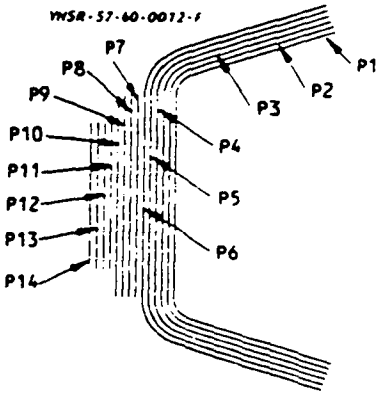

SECTION THRU FRONT SPAR LAMINATE AT HINGE FITTING LOCATION - WS 538.783

DETAIL IX

(DETAIL CONT ON NEXT PAGE)

Aileron Structure Identification (Graphite Composite Aileron)
Figure 4B (Sheet 9)

114788

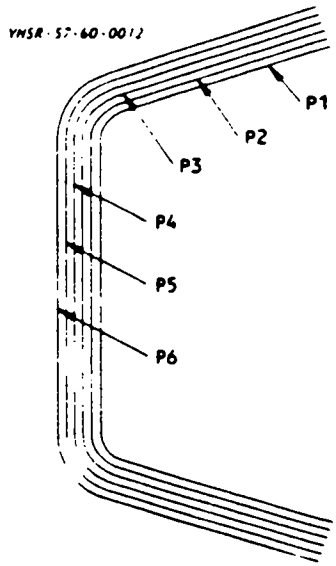

SECTION THRU FRONT SPAR LAMINATE AT
INBD AND OUTBD ENDS

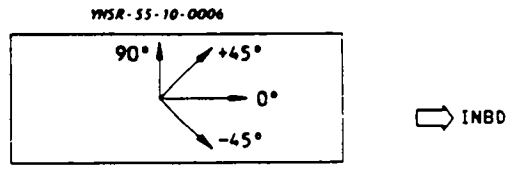

VIEW ON FRONT SPAR

ITEM NO.	PLY NO.	MATERIAL	PLY ORIENTATION
9	P1	D	OPTIONAL
	P2,P6	B	-45°
	P3,P5		+45°
	P4		0°
	P8,P10	C	-45°
	P7,P9		+45°
	P17,P19, P23,P26, P28	A	±45°
	P12,P13		0° OR 90°
	P15,P20, P24		±45°
	P16,P21, P25		0° OR 90°
	P11,P14		±45°
	P18,P22, P27		0° OR 90°

PLY TABLE FOR FRONT SPAR
DETAIL IX (CONT)

Aileron Structure Identification (Graphite Composite Aileron)
Figure 4B (Sheet 10)

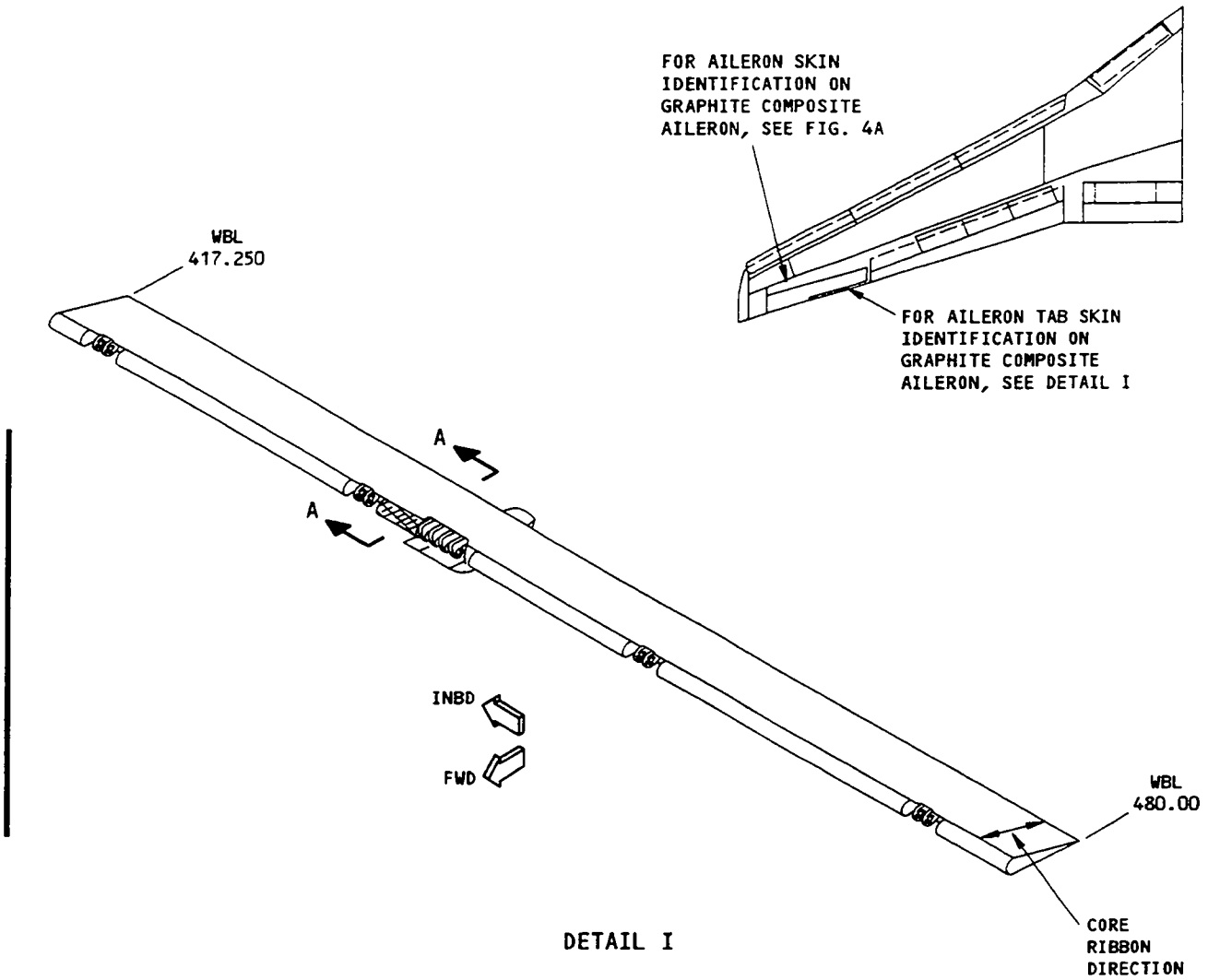

DETAIL I

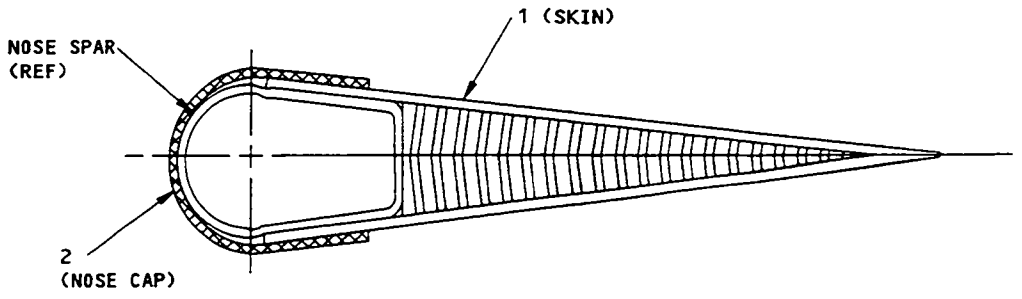

SECTION A-A

Aileron Tab Skin Identification (Graphite Composite Spoiler)
Figure 4C (Sheet 1)

C17922

NOTES

- THIS FIGURE APPLIES TO GRAPHITE COMPOSITE AILERONS ON 737-200 AIRPLANES, CUM LINE NUMBERS: 1003, 1012, 1013, 1018 THRU 1021, 1023 THRU 1028, 1031 THRU 1036, 1038 THRU 1042, 1044 THRU 1047, 1049 THRU 1051, 1053 THRU 1056, 1058, 1060, 1061, 1062, 1064 THRU 1068, 1070 THRU 1072, 1074, 1075, 1077 THRU 1079, 1081, 1082, 1084 THRU 1086, 1088, 1089, 1091, 1093, 1095, 1097, 1099, 1102, 1105, 1109, 1113, 1117, 1120, 1186, 1189, 1194, 1197, 1199, 1203, 1241, 1245, 1256, 1257, 1261, 1262, 1265, 1266, 1267, 1299, 1313, 1319, 1329, 1342, 1347, 1361, 1369, 1371, 1379, 1387, 1392, 1397, 1399, 1401, 1403, 1405, 1414, 1415, 1418, 1420, 1422, 1424, 1426, 1453, 1456, 1486, 1523, 1530, 1565, 1579, 1581, 1583, 1585

[A] WARP DIRECTION OPTIONAL

[B] 250°F (121°C) CURE AT MANUFACTURE

ITEM	DESCRIPTION	GAGE	MATERIAL	EFFECTIVITY
1	SKIN - BOND ASSY SKIN CORE	0.012	PREPREG GLASS FABRIC PER BMS 8-79, TYPE O, CLASS I, (3) PLIES NON-METALLIC HONEYCOMB PER BMS 8-124, CLASS I, TYPE II, GRADE 3.0 [B]	
2	NOSE CAP	0.016	CLAD 2024-T3	

List Of Materials For Detail I

Aileron Tab Skin Identification
(Graphite Composite Aileron)
Figure 4C (Sheet 2)

REF DWG
6546455

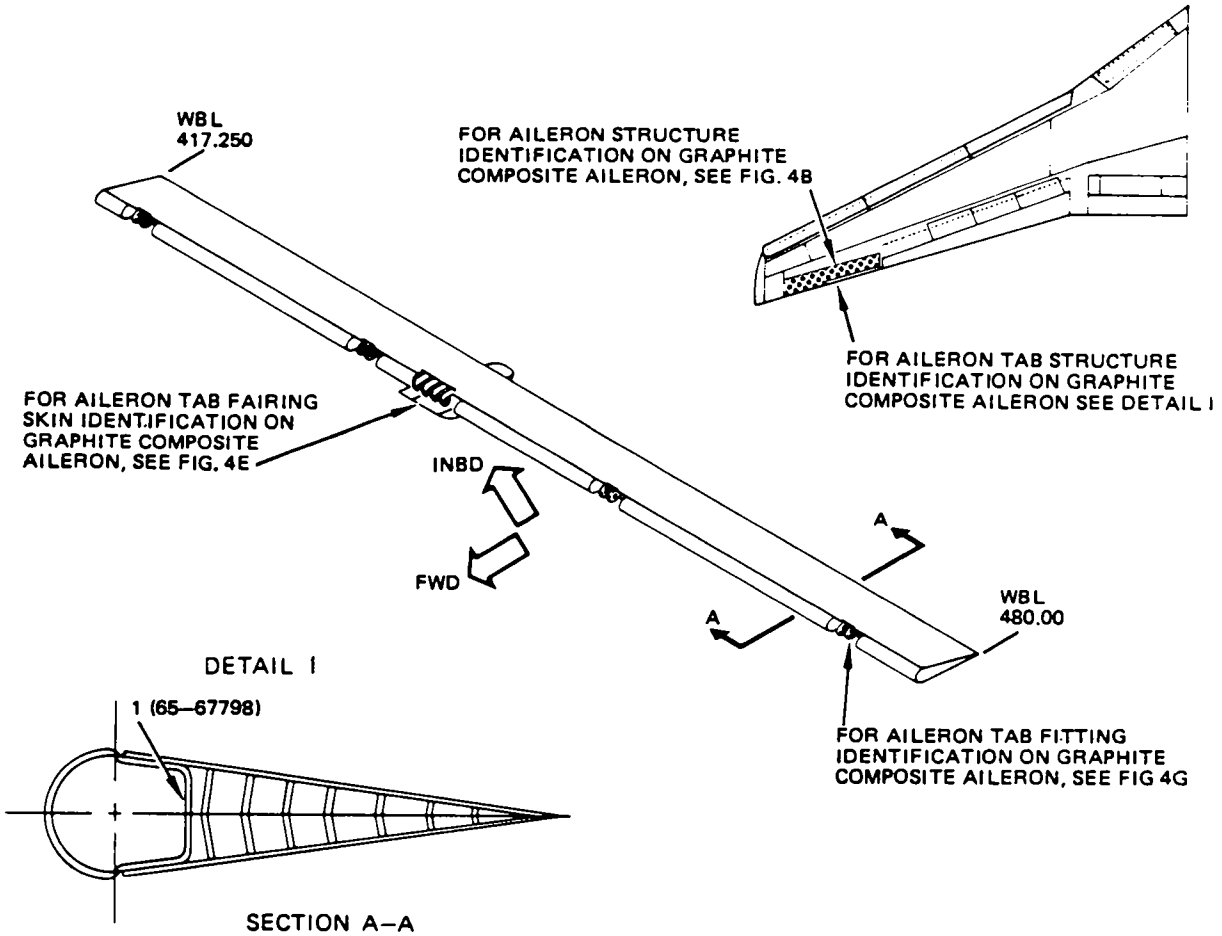

Aileron Tab Structure Identification
(Graphite Composite Aileron)
Figure 4D (Sheet 1)

ITEM	DESCRIPTION	GAGE	MATERIAL	EFFECTIVITY
1	NOSE SPAR	0.028	2024-T3 TUBING	

List of Materials For Detail I
And Section A-A

NOTE

- THIS FIGURE APPLIES TO GRAPHITE COMPOSITE AILERONS ON 737-200 AIRPLANES, CUM LINE NUMBERS: 1003, 1012, 1013, 1018 THRU 1021, 1023 THRU 1028, 1031 THRU 1036, 1038 THRU 1042, 1044 THRU 1047, 1049 THRU 1051, 1053 THRU 1056, 1058, 1061, 1062, 1064 THRU 1068, 1070 THRU 1072, 1074, 1075, 1077 THRU 1079, 1081, 1082, 1084 THRU 1086, 1088, 1089, 1091, 1093, 1095, 1097, 1099, 1102, 1105, 1109, 1113, 1117, 1120, 1186, 1189, 1194, 1197, 1199, 1203, 1226, 1236, 1241, 1245, 1256, 1257, 1261, 1262, 1265, 1266, 1267, 1299, 1313, 1319, 1329, 1342, 1347, 1361, 1369, 1371, 1379, 1387, 1392, 1397, 1399, 1401, 1403, 1405, 1414, 1415, 1418, 1420, 1422, 1424, 1426, 1453, 1456, 1486, 1523, 1530, 1565, 1579, 1581, 1583, 1585

Aileron Tab Structure Identification
(Graphite Composite Aileron)
Figure 4D (Sheet 2)

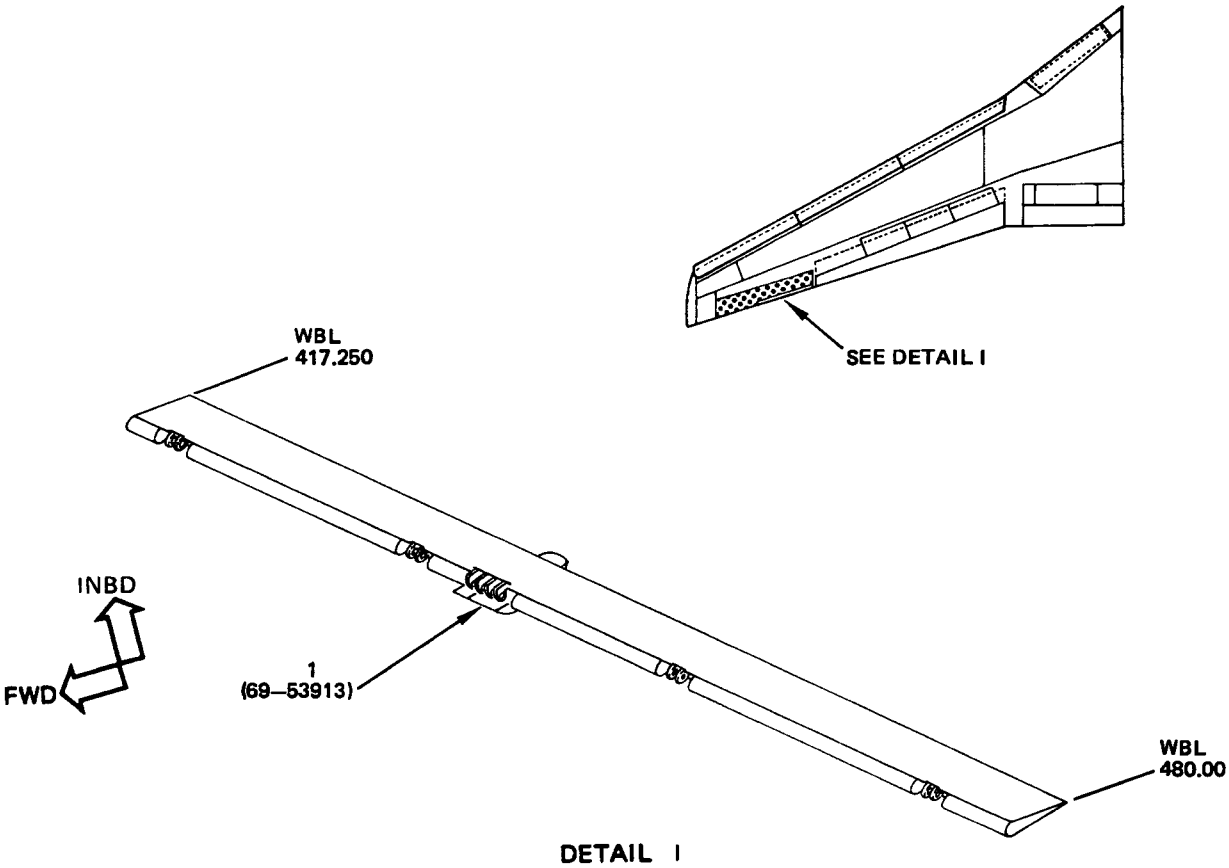

Aileron Tab Fairing Skin Identification
(Graphite Composite Aileron)
Figure 4E (Sheet 1)

BOEING PROPRIETARY - Copyright © - Unpublished Work - See title page for details.

ITEM	DESCRIPTION	GAGE	MATERIAL	EFFECTIVITY
1	MAST FAIRING		PREPREG GLASS FABRIC LAMINATE PER BMS 8-80 [A][B]	

List of Materials For Detail I,

NOTES

- THIS FIGURE APPLIES TO GRAPHITE COMPOSITE AILERONS ON 737-200 AIRPLANES, CUM LINE NUMBERS: 1003, 1012, 1013, 1018 THRU 1021, 1023 THRU 1028, 1031 THRU 1036, 1038 THRU 1042, 1044 THRU 1047, 1049 THRU 1051, 1053 THRU 1056, 1058, 1061, 1062, 1064 THRU 1068, 1070 THRU 1072, 1074, 1075, 1077 THRU 1079, 1081, 1082, 1084 THRU 1086, 1088, 1089, 1091, 1093, 1095, 1097, 1099, 1102, 1105, 1109, 1113, 1117, 1120, 1186, 1189, 1194, 1197, 1199, 1203, 1241, 1245, 1256, 1257, 1261, 1262, 1265, 1266, 1267, 1299, 1313, 1319, 1329, 1342, 1347, 1361, 1369, 1371, 1379, 1387, 1392, 1397, 1399, 1401, 1403, 1405, 1414, 1415, 1418, 1420, 1422, 1424, 1426, 1453, 1456, 1486, 1523, 1530, 1565, 1579, 1581, 1583, 1585

[A] WARP DIRECTION OPTIONAL

[B] 250°F (121°C) CURE AT MANUFACTURE

Aileron Tab Fairing Skin Identification
(Graphite Composite Aileron)
Figure 4E (Sheet 2)

REF DWG
65C25911
65C25914

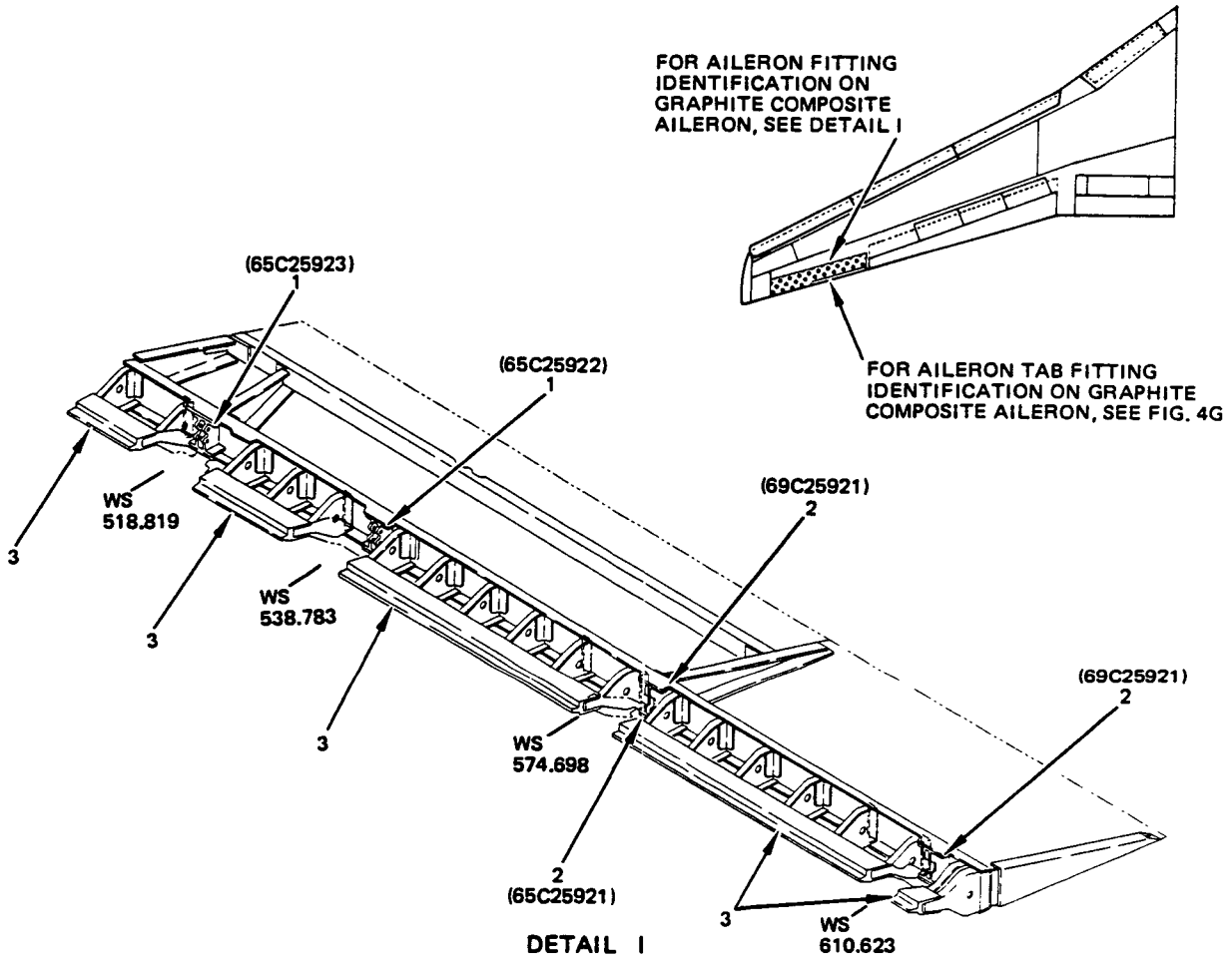

Aileron Fitting Identification
(Graphite Composite Aileron)
Figure 4F (Sheet 1)

ITEM	DESCRIPTION	GAGE	MATERIAL	EFFECTIVITY
1	HINGE FITTING		FORGING 7075-T73	
2	HINGE FITTING		ALUM CASTING 356-T6	
3	NOSE FORK FITTING		BAC 1519-150 7075-T73511	

NOTE

- THIS FIGURE APPLIES TO GRAPHITE COMPOSITE AILERONS ON 737-200 AIRPLANES, CUM LINE NUMBERS: 1003, 1012, 1013, 1018 THRU 1021, 1023 THRU 1028, 1031 THRU 1036, 1038 THRU 1042, 1044 THRU 1047, 1049 THRU 1051, 1053 THRU 1056, 1058, 1061, 1062, 1064 THRU 1068, 1070 THRU 1072, 1074, 1075, 1077 THRU 1079, 1081, 1082, 1084 THRU 1086, 1088, 1089, 1091, 1093, 1095, 1097, 1099, 1102, 1105, 1109, 1113, 1117, 1120, 1186, 1189, 1194, 1197, 1199, 1203, 1241, 1245, 1256, 1257, 1261, 1262, 1265, 1266, 1267, 1299, 1313, 1319, 1329, 1342, 1347, 1361, 1369, 1371, 1379, 1387, 1392, 1397, 1399, 1401, 1403, 1405, 1414, 1415, 1418, 1420, 1422, 1424, 1426, 1453, 1456, 1486, 1523, 1530, 1565, 1579, 1581, 1583, 1585

Aileron Fitting Identification
(Graphite Composite Aileron)
Figure 4F (Sheet 2)

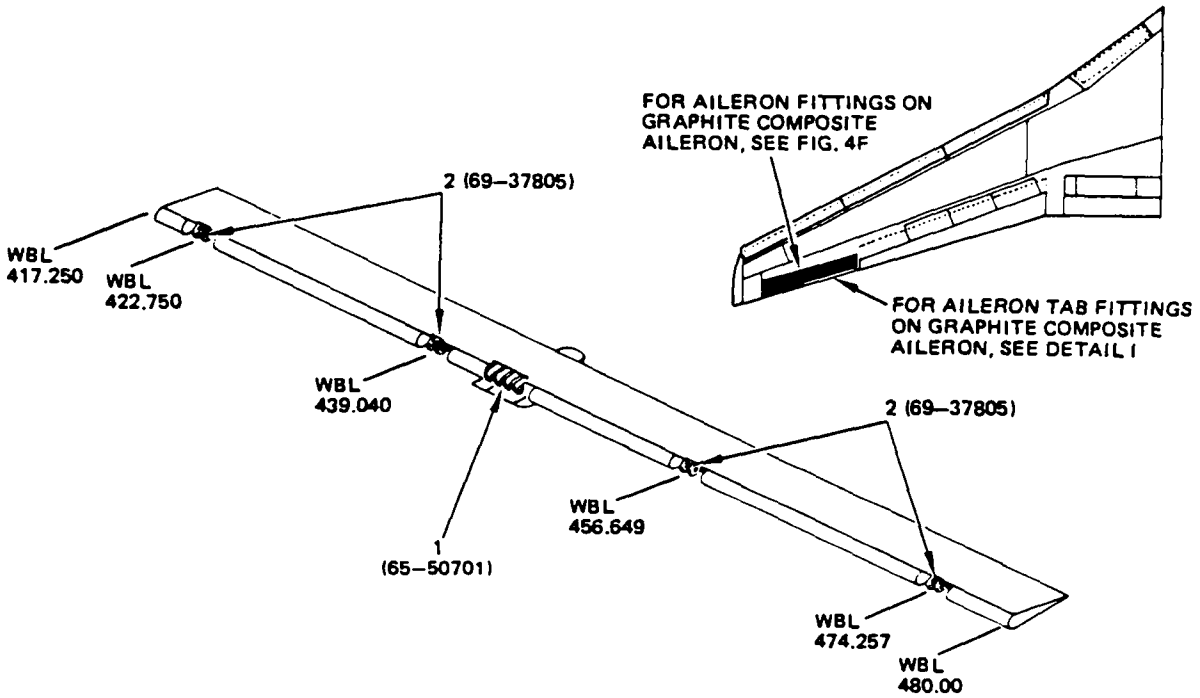

DETAIL I

Aileron Tab Fitting Identification
(Graphite Composite Aileron)
Figure 4G (Sheet 1)

ITEM	DESCRIPTION	GAGE	MATERIAL	EFFECTIVITY
1	FITTING	1.4	7075-T73 (OPT: 7075-T3511 EXTRU, 7075-T6511 HT TR TO T73511 7075-T651 PLATE HT TR TO T7351)	
2	HINGE FITTING		CASTING 356-T6 AMS 4260 (OPT: 7075-T73, 7075-T6511 EXTRU HT TR TO T73511, 7075-T3511 EXTRU OR 7075-T651 PLATE HT TR TO T7351)	

LIST OF MATERIALS FOR DETAIL I,

NOTE

- THIS FIGURE APPLIES TO GRAPHITE COMPOSITE AILERONS ON 737-200 AIRPLANES, CUM LINE NUMBERS: 1003, 1012, 1013, 1018 THRU 1021, 1023 THRU 1028, 1031 THRU 1036, 1038 THRU 1042, 1044 THRU 1047, 1049 THRU 1051, 1053 THRU 1061, 1062, 1064, THRU 1068, 1070 THRU 1072, 1074, 1075, 1077 THRU 1079, 1081, 1082, 1084 THRU 1086, 1088, 1089, 1091, 1093, 1095, 1097, 1099, 1102, 1105, 1109, 1113, 1117, 1120, 1186, 1189, 1194, 1197, 1199, 1203, 1241, 1245, 1256, 1257, 1261, 1262, 1265, 1266, 1267, 1299, 1313, 1319, 1329, 1342, 1347, 1361, 1369, 1371, 1379, 1387, 1392, 1397, 1399, 1401, 1403, 1405, 1414, 1415, 1418, 1420, 1422, 1424, 1426, 1453, 1456, 1486, 1523, 1530, 1565, 1579, 1581, 1583, 1585

Aileron Tab Fitting Identification
(Graphite Composite Aileron)
Figure 4G (Sheet 2)

ITEM	MATERIAL	REPAIR FIG. NO.
1	MACHINED FORGING 7075-T73 (OPT 7075-T7351) C	
2	0.040 PHENOLIC	
3	0.020 CLAD 7075-T6	O
4	MACHINED 2024-T4	
5	MACHINED FORGING 7079-T6 C	
6	BAC1510-499 7075-T6511	
7	0.016 CLAD 7075-T6	N
8	MACHINED FORGING 7079-T611 C	
9	BAC1510-751 7075-T6511	
10	AL HONEYCOMB 3-ION PER BMS 4-4	N O
11	0.020 6061-T4	
12	0.016 6061-T4	
13	0.040 CLAD 2024-T3	
14	0.050 CLAD 2024-T3	
15	CORE AL HONEYCOMB 3-ION PER BMS 4-4F	N O
16	HINGE FITTING FORGING 7075-T73	
17	MACHINED FROM 0.016 BARE 2024-T3	N

Spoiler Structure Identification
(Metal Spoiler)
Figure 5 (Sheet 1)

NOTES

- THIS FIGURE APPLIES TO METAL SPOILERS DELIVERED ON 737-100 AND 737-200 AIRPLANES, CUM LINE NUMBERS 1 THRU 1000, 1002, 1004 THRU 1006, 1008 THRU 1011, 1014, 1016, 1017, 1059, 1135, 1143, 1151, 1154, 1155, 1165, 1167, 1176, 1178, 1189 THRU 1585

[A] FOR CUM LINE NUMBERS: 2 THRU 12, 14, 15, 17 THRU 19, 21 THRU 25, 27

[B] FOR CUM LINE NUMBERS: 1, 13, 16, 20, 26, 28 AND ON

[C] ATTACHMENT FITTING

[D] CAPPING STRIPS ARE NOT INSTALLED ON THESE AIRPLANES UNLESS SB 57-1053 HAS BEEN INCORPORATED, CUM LINE NUMBERS: 1 THRU 224, 226 THRU 228, 230 THRU 236, 238, 240 THRU 245, 248 THRU 257, 259 THRU 262

[E] FOR CUM LINE NUMBERS: 280 THRU 288

[F] FOR AIRPLANES WITH SB 57-1042 INCORPORATED

[G] FOR CUM LINE NUMBERS: 1 THRU 314

[H] FOR CUM LINE NUMBERS: 315 AND ON

[J] DELETED

[K] FORGINGS MADE OF 7079-T6 MATERIAL HAVE BEEN REPLACED BY FORGINGS MADE OF 7075-T73 FOR PRODUCTION. 7079-T73 FORGINGS ARE RECOMMENDED WHEN THE EXISTING STOCK OF 7079-T6 IS GONE

[L] FOR CUM LINE NUMBERS: 1 THRU 279

[M] FOR CUM LINE NUMBERS: 280 AND ON

[N] REFER TO SRM 51-40-6

[O] REFER TO SRM 57-50-5

Spoiler Structure Identification
(Metal Spoiler)
Figure 5 (Sheet 2)

REF DWG 65-46452

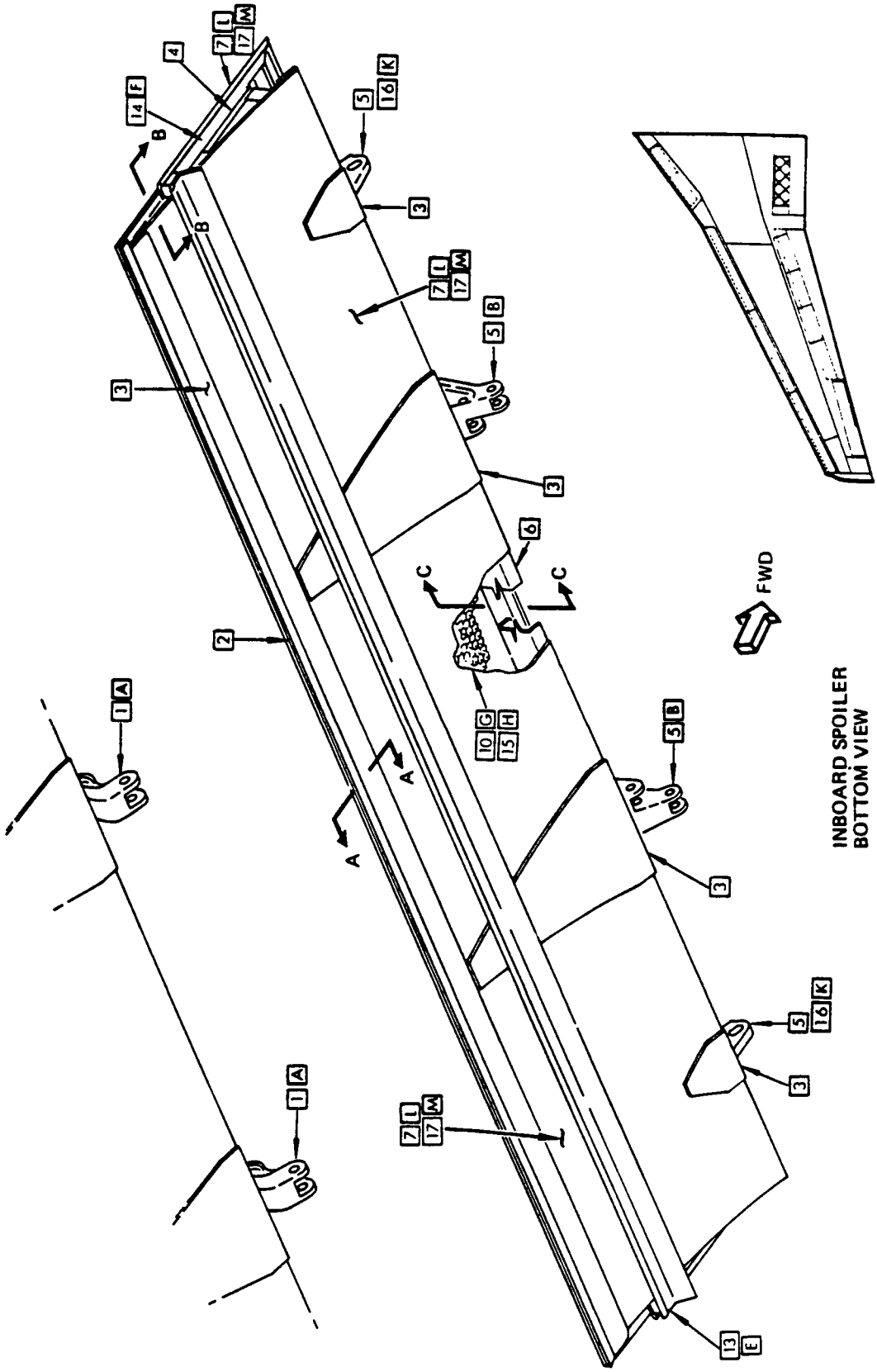

Spoiler Structure Identification
(Metal Spoiler)
Figure 5 (Sheet 3)

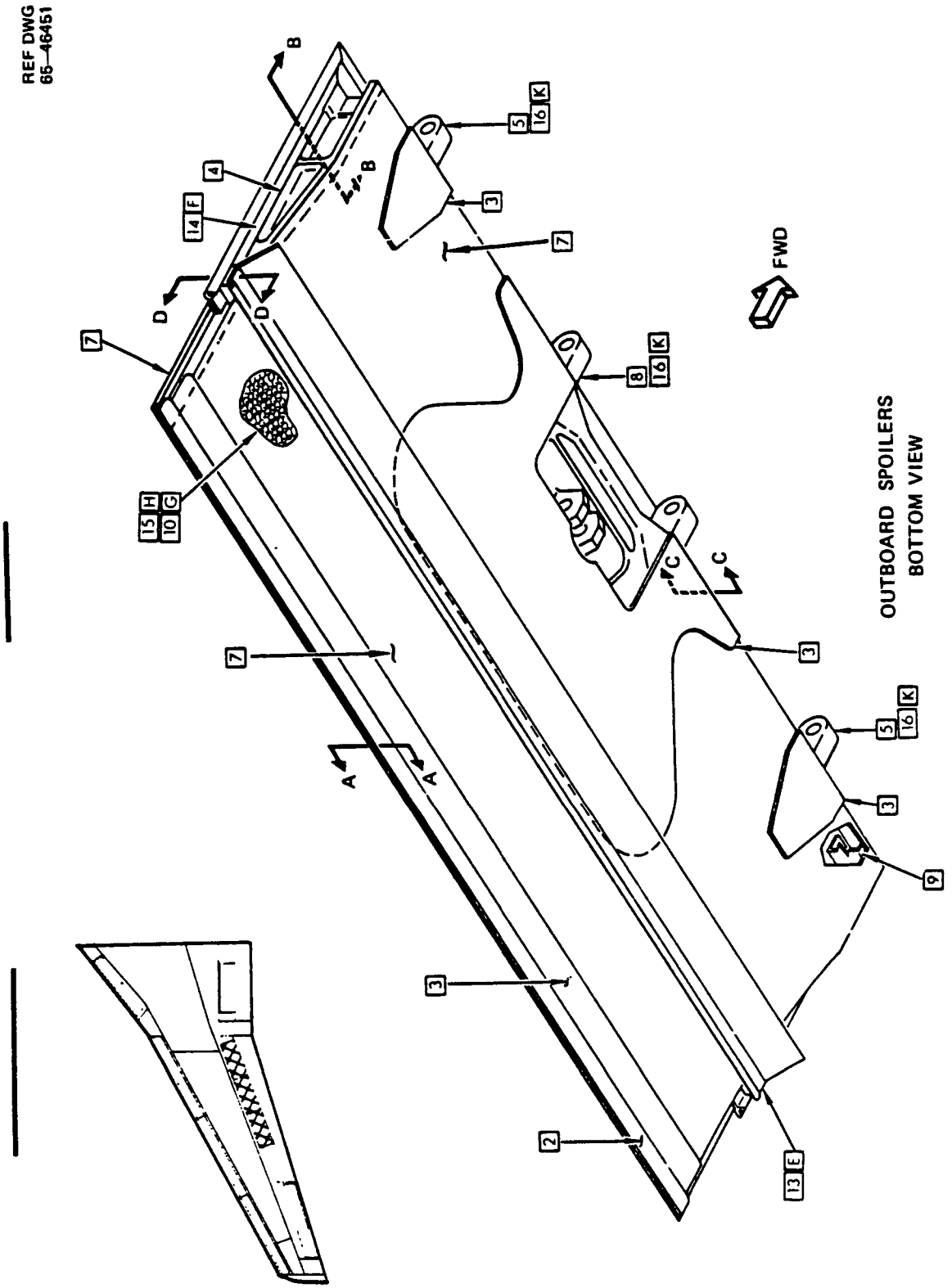

Spoiler Structure Identification
(Metal Spoiler)
Figure 5 (Sheet 4)

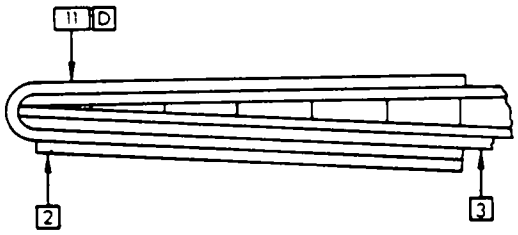

SECTION A–A

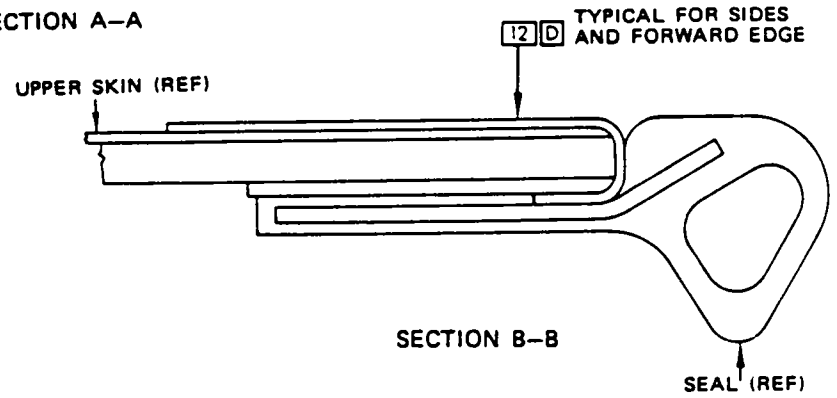

SECTION B–B

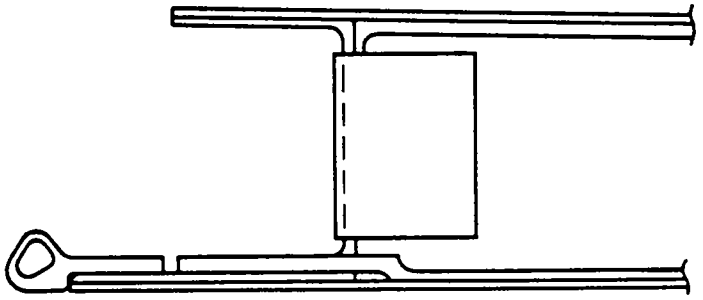

SECTION C–C

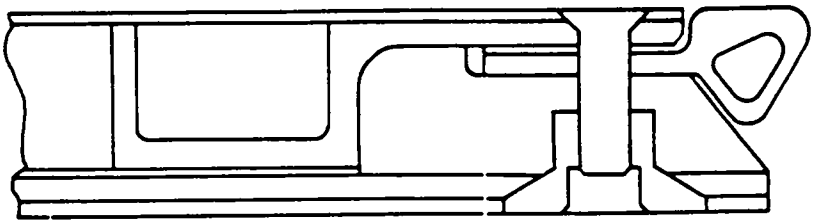

SECTION D–D

Spoiler Structure Identification
(Metal Spoiler)
Figure 5 (Sheet 5)

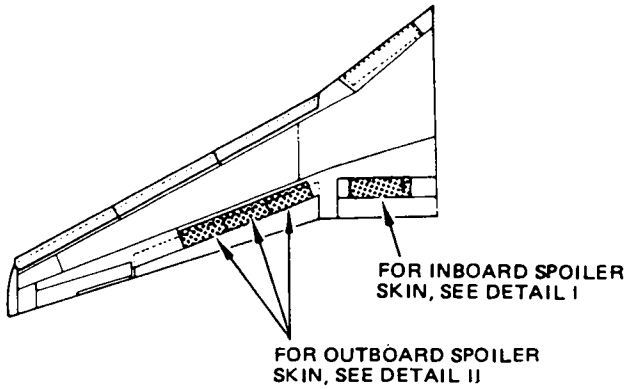

NOTES

- THIS FIGURE APPLIES TO GRAPHITE COMPOSITE SPOILERS ON 737-200 AIRPLANES, CUM LINE NUMBERS:
  1003, 1012, 1013, 1018 THRU 1058, 1060 THRU 1120, 1186

- PLY LAYUP AND HONEYCOMB CORE DENSITY VARY THROUGHOUT BONDED PANEL ASSY. SEE ENGINEERING DRAWINGS FOR PANEL ASSY CONFIGURATION

[A] CORE RIBBON DIRECTION

[B] 350°F (177°C) CURE AT MANUFACTURE

Spoiler Skin Identification
(Graphite Composite Spoiler)
Figure 6 (Sheet 1)

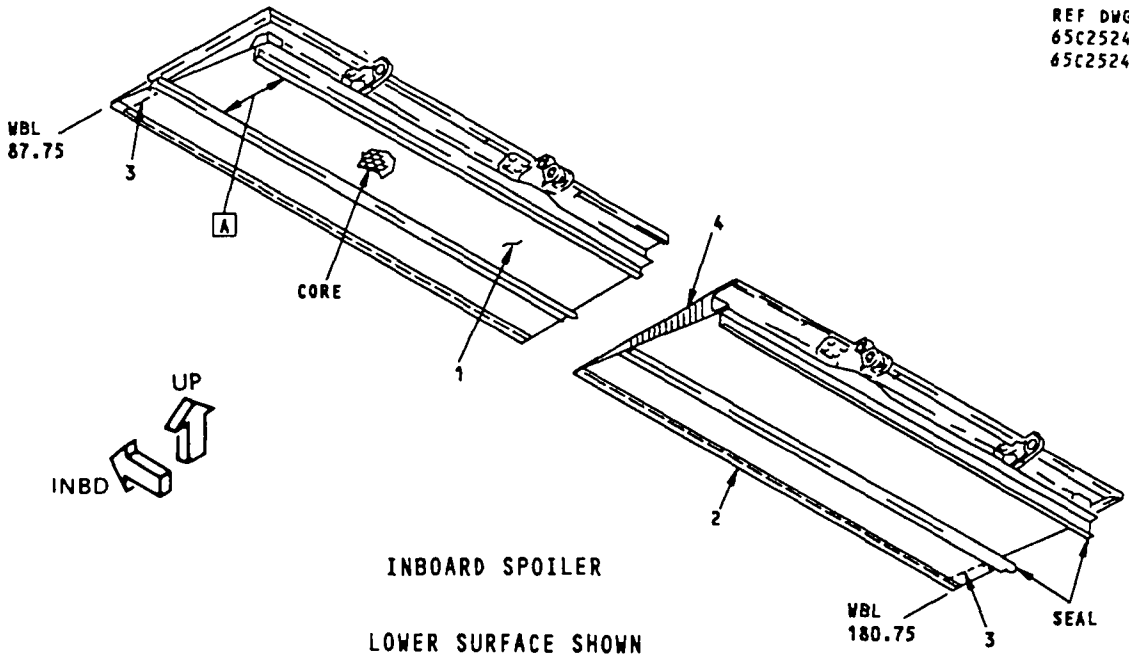

INBOARD SPOILER

LOWER SURFACE SHOWN
DETAIL I

ITEM	DESCRIPTION	GAGE	MATERIAL	EFFECTIVITY
1	PANEL - BOND ASSY		GRAPHITE/EPOXY HONEYCOMB SANDWICH	
	LOWER SKIN - OUTER PLIES		PREPREG GRAPHITE FABRIC PER BMS 8-212, TYPE IV, CLASS 2, STYLE 3K-70-PW B	
	LOWER SKIN - INNER PLIES		PREPREG GRAPHITE TAPE PER BMS 8-212, TYPE II, CLASS 3, GRADE 190 (OPTIONAL: CLASS 1) B	
	CORE		NON-METALLIC HONEYCOMB PER BMS 8-124, CLASS IV, TYPE V, GRADE 3.0	
2	TE FILLER		PREPREG GRAPHITE FABRIC PER BMS 8-212, TYPE IV, CLASS 2, STYLE 3K-70-PW B	
3	WEDGE FILLER		PREPREG GRAPHITE TAPE PER BMS 8-212, TYPE II, CLASS 3, GRADE 190 (OPTIONAL: CLASS 1) B	

LIST OF MATERIALS FOR DETAIL I

Spoiler Skin Identification
(Graphite Composite Spoiler)
Figure 6 (Sheet 2)

ITEM	DESCRIPTION	GAGE	MATERIAL	EFFECTIVITY
4	PANEL - BOND ASSY		GRAPHITE/EPOXY HONEYCOMB SANDWICH	
	UPPER SKIN - OUTER PLIES		PREPREG GRAPHITE FABRIC PER BMS 8-212, TYPE IV, CLASS 2, STYLE 3K-70-PW [B]	
	UPPER SKIN - INNER PLIES		PREPREG GRAPHITE TAPE PER BMS 8-212, TYPE II, CLASS 3 GRADE 190 (OPTIONAL: CLASS 1) [B]	

LIST OF MATERIALS FOR DETAIL I (CONT)

Spoiler Skin Identification
(Graphite Composite Spoiler)
Figure 6 (Sheet 3)

REF DWG
65C25251
65C25252

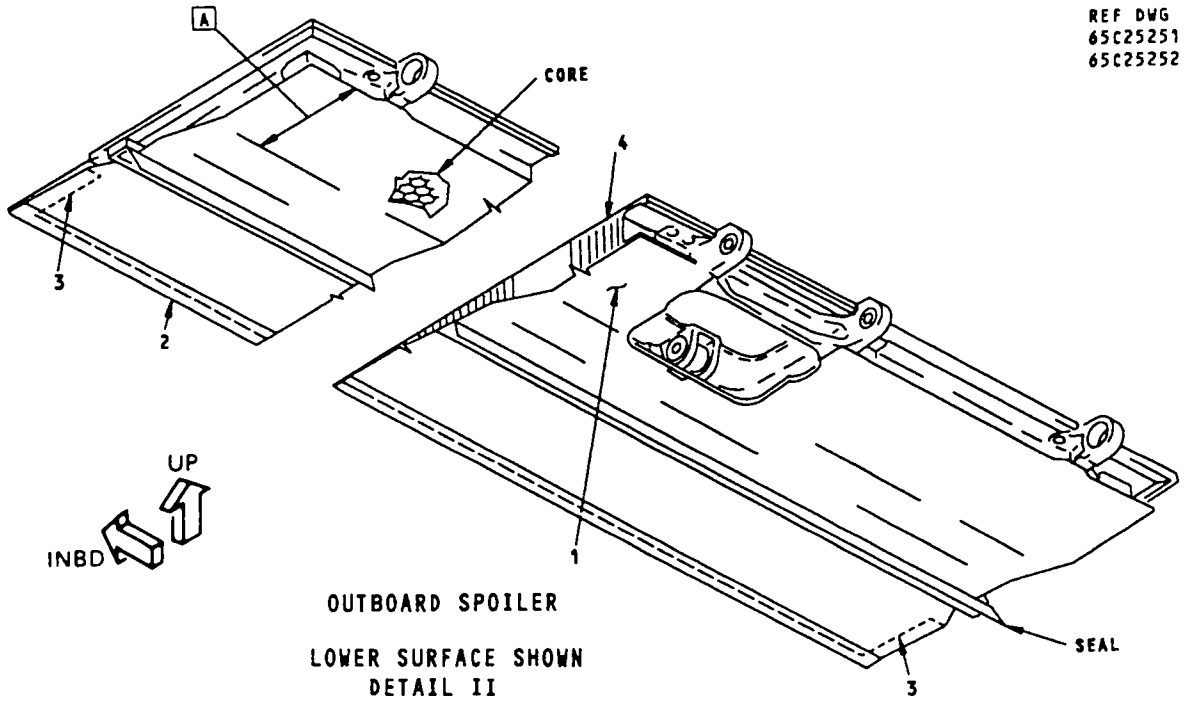

OUTBOARD SPOILER

LOWER SURFACE SHOWN
DETAIL II

ITEM	DESCRIPTION	GAGE	MATERIAL	EFFECTIVITY
1	PANEL - BOND ASSY		GRAPHITE/EPOXY HONEYCOMB SANDWICH	
	SKIN		PREPREG GRAPHITE TAPE PER BMS 8-212, TYPE II, CLASS 3, GRADE 190 (OPTIONAL: CLASS 1) B	
	CORE		NON-METALLIC HONEYCOMB PER BMS 8-124, CLASS IV, TYPE V, GRADE 3.0	
2	TE FILLER		PREPREG GRAPHITE FABRIC PER BMS 8-212, TYPE II CLASS 3 GRADE 190 (OPTIONAL: CLASS 1) B	
3	WEDGE FILLER		PREPREG GRAPHITE TAPE PER BMS 8-212, TYPE II CLASS 3 GRADE 190 (OPTIONAL: CLASS 1) B	

LIST OF MATERIALS FOR DETAIL II

Spoiler Skin Identification
(Graphite Composite Spoiler)
Figure 6 (Sheet 4)

ITEM	DESCRIPTION	GAGE	MATERIAL	EFFECTIVITY
4	PANEL - BOND ASSY		GRAPHITE/EPOXY HONEYCOMB SANDWICH	
	UPPER SKIN - OUTER PLIES		PREPREG GRAPHITE FABRIC PER BMS 8-212, TYPE IV, CLASS 2, STYLE 3K-70-PW [B]	
	UPPER SKIN - INNER PLIES		PREPREG GRAPHITE TAPE PER BMS 8-212, TYPE II, CLASS 3 GRADE 190 (OPTIONAL: CLASS 1) [B]	

LIST OF MATERIALS FOR DETAIL II (CONT)

Spoiler Skin Identification
(Graphite Composite Spoiler)
Figure 6 (Sheet 5)

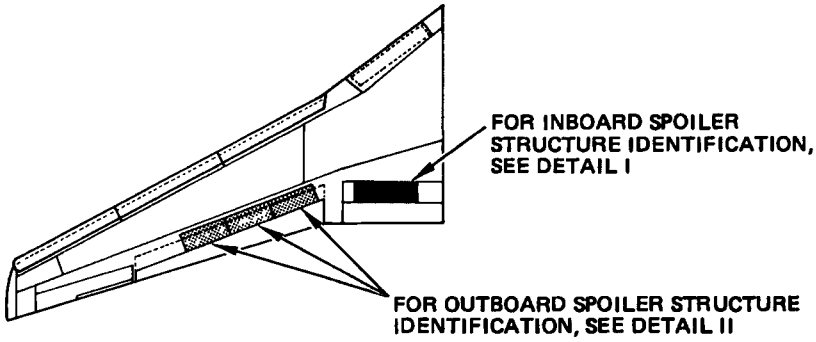

NOTES

- THIS FIGURE APPLIES TO GRAPHITE COMPOSITE SPOILERS ON 737-200 AIRPLANES, CUM LINE NUMBERS: 1003, 1012, 1013, 1018 THRU 1120, 1186 THRU 1453, 1486 (BOEING REF: PZ447, P4341 THRU P4399, P4801 THRU P5499, P8979 THRU P9995, PM341 THRU PM380)

[A] PREPREG GRAPHITE TAPE PER BMS 8-212 TYPE II, CLASS 3, GRADE 190 (OPTIONAL: CLASS I)

[B] PREPREG GRAPHITE FABRIC PER BMS 8-212, TYPE IV, CLASS 2, STYLE 3K-70-PW

[C] PREPREG GLASS FABRIC PER BMS 8-139, TYPE 120

[D] PLY ORIENTATION CONVENTION: THE PLY ORIENTATION OF EACH PLY IS DESIGNATED BY A NUMBER (IN DEGREES) REPRESENTING THE ORIENTATION OF THE AXIS PARALLEL TO THE DIRECTION OF FILAMENTS (IN TAPE) OR LONGITUDINALLY ORIENTED YARN (IN A WOVEN FABRIC) WITH RESPECT TO A REFERENCE AXIS. 0 DEGREES IS THE REFERENCE AXIS. THE DIRECTION OF LONGITUDINAL YARN IN A WOVEN FABRIC IS CALLED THE WARP DIRECTION

[E] MATERIAL AND PLY ORIENTATION ARE ALWAYS SHOWN FOR FIELD AREAS. SEE BOEING DRAWINGS FOR EDGE BANDS AND AREAS WITH DOUBLERS WHENEVER THEY ARE NOT SHOWN IN THE MANUAL AS ADJUNCTS TO FIELD AREAS

Spoiler Structure Identification
(Graphite Composite Spoiler)
Figure 7 (Sheet 1)

BOEING PROPRIETARY - Copyright © - Unpublished Work - See title page for details.

REF DWG
65C25242

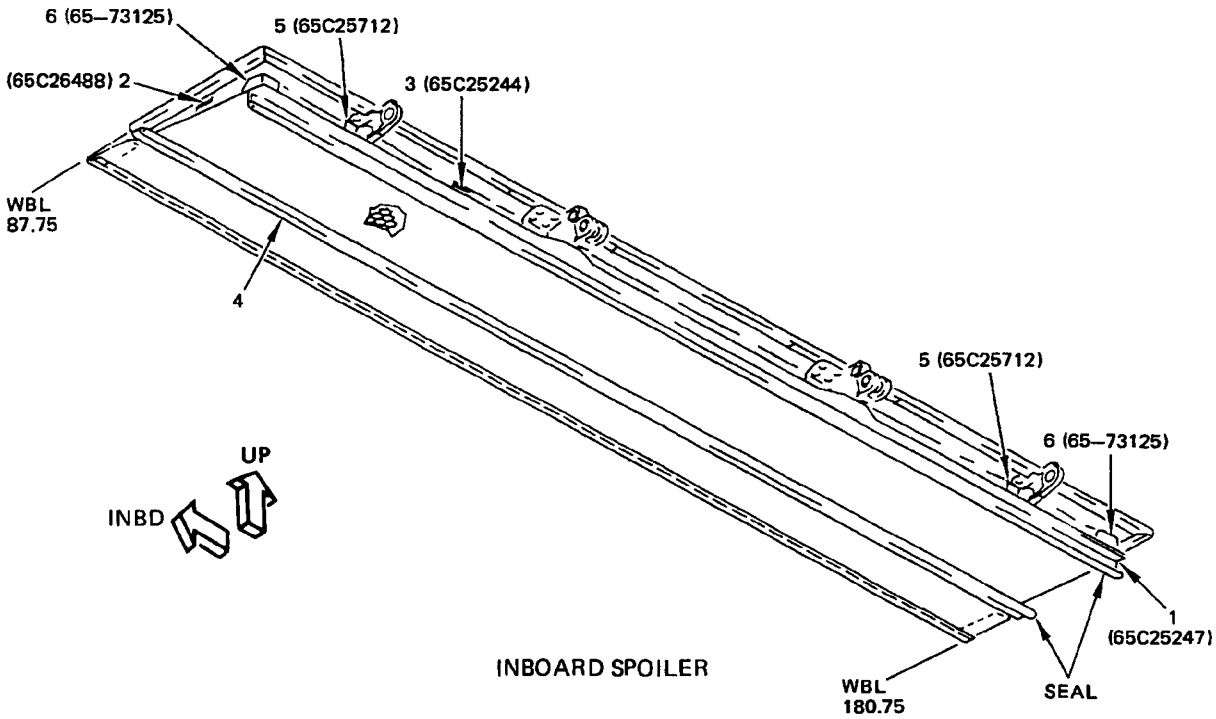

INBOARD SPOILER

LOWER SURFACE SHOWN

DETAIL I

ITEM	DESCRIPTION	GAGE	MATERIAL	EFFECTIVITY
1	ANGLE - BOND ASSY SKIN		GRAPHITE/EPOXY LAMINATE SEE DETAIL III	
2	END RIB - BOND ASSY SKIN		GRAPHITE/EPOXY LAMINATE SEE DETAIL IV	
3	SPAR - BOND ASSY SKIN		GRAPHITE/EPOXY LAMINATE SEE DETAIL V	
4	SEAL RETAINER	0.080	COTTON FABRIC, PHENOLIC RESIN PER MIL-P-15035, TYPE FBG (OPTIONAL: TYPE FBM)	
5	ATTACH CLIP		AND 10134-2009 7075-T6511	
6	ATTACH CLIP	0.040	T1-COM-PURE-70 PER MIL-T-9046, TYPE I	

LIST OF MATERIALS FOR DETAIL I

Spoiler Structure Identification
(Graphite Composite Spoiler)
Figure 7 (Sheet 2)

BOEING PROPRIETARY - Copyright © - Unpublished Work - See title page for details.

REF DWG
65C25251

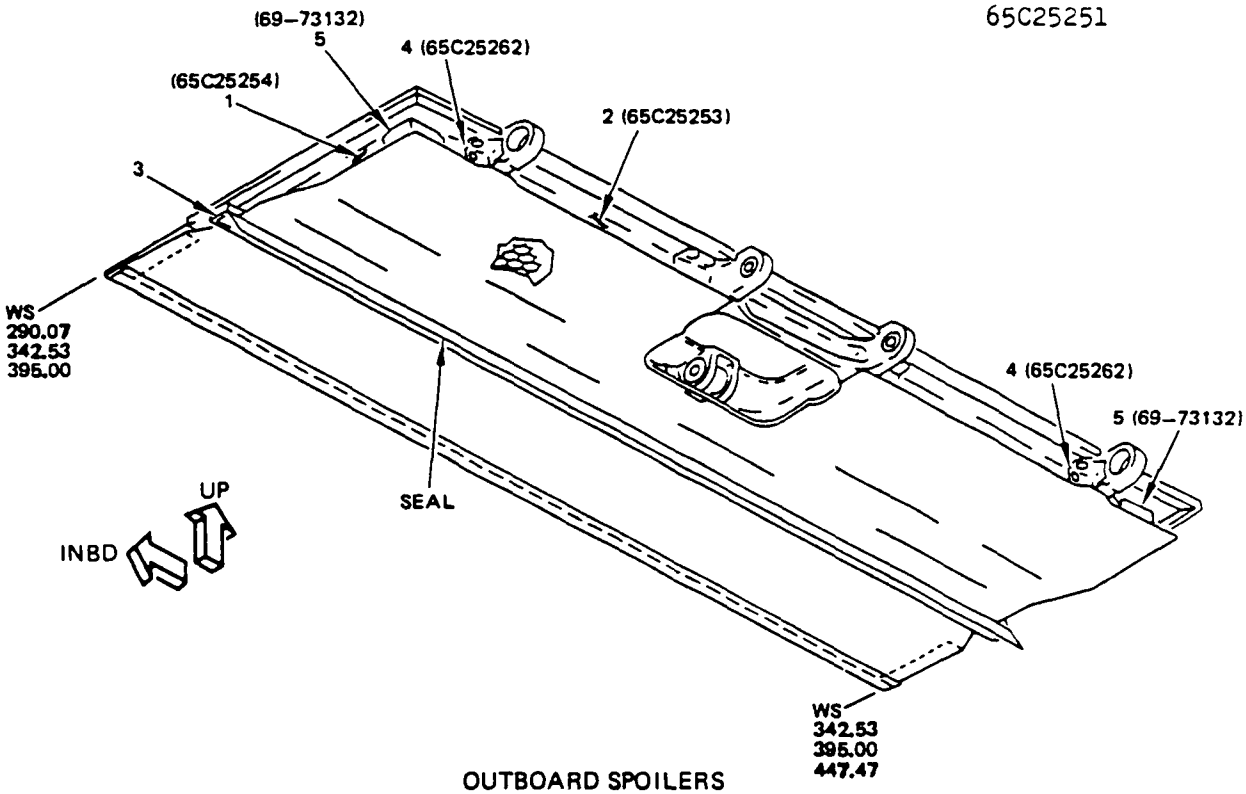

OUTBOARD SPOILERS
LOWER SURFACE SHOWN
DETAIL II

ITEM	DESCRIPTION	GAGE	MATERIAL	EFFECTIVITY
1	END RIB - BOND ASSY SKIN		GRAPHITE/EPOXY LAMINATE SEE DETAIL VI	
2	SPAR - BOND ASSY SKIN		GRAPHITE/EPOXY LAMINATE SEE DETAIL VII	
3	SEAL RETAINER	0.060	COTTON FABRIC PHENOLIC RESIN PER MIL-P-15035, TYPE FBM (OPTIONAL: TYPE FBE OR FBG)	
4	ATTACH ANGLE		AND 10134-1603 7075-T6511	
5	ATTACH ANGLE	0.040	T1-COM-PURE-70 PER MIL-T-9046, TYPE I	

List Of Materials For Detail II

Spoiler Structure Identification
(Graphite Composite Spoiler)
Figure 7 (Sheet 3)

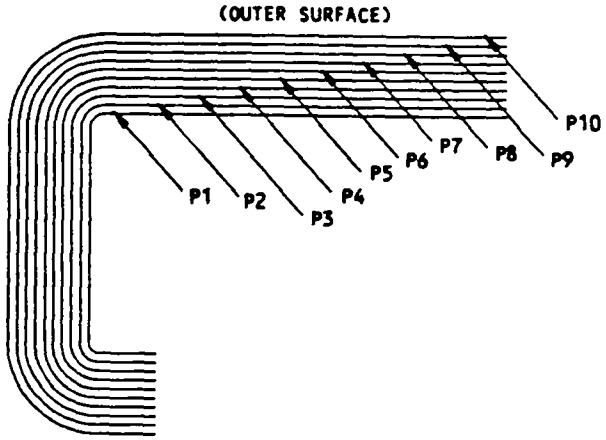

TYPICAL SECTION THRU ANGLE

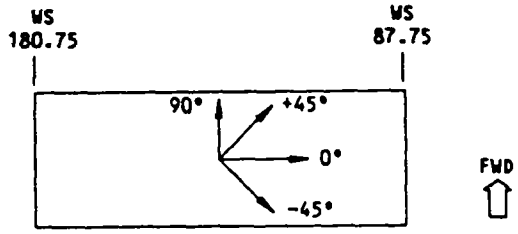

VIEW ON ANGLE D

ITEM	PLY NO.	MATERIAL	PLY ORIENTATION
1 (DETAIL I)	P4,P6	A	± 45°
	P5		-45°
	P1,P3,P7,P9		90°
	P2,P8		0°
	P10	C	OPTIONAL

PLY TABLE FOR ANGLE E

DETAIL III

Spoiler Structure Identification (Graphite Composite Spoiler)
Figure 7 (Sheet 4)

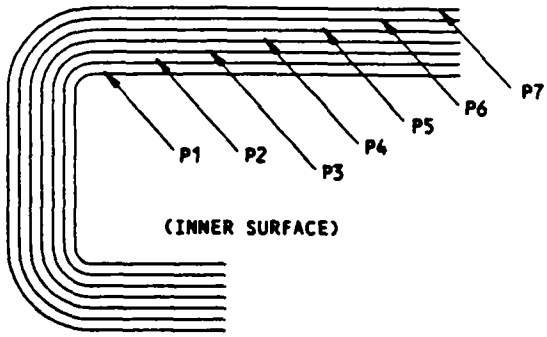

TYPICAL SECTION THRU END RIB

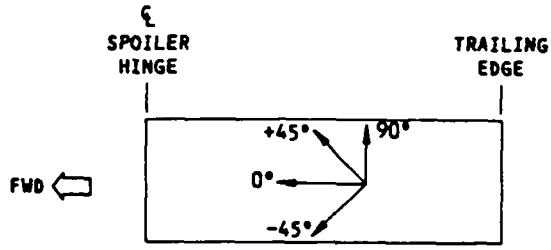

VIEW ON ANGLE D

ITEM	PLY NO.	MATERIAL	PLY ORIENTATION
2 (DETAIL I)	P2,P4,P5,P7	A	± 45°
	P3,P6	A	0° OR 90°
	P1	C	OPTIONAL

PLY TABLE FOR END RIB E

DETAIL IV

Spoiler Structure Identification (Graphite Composite Spoiler)
Figure 7 (Sheet 5)

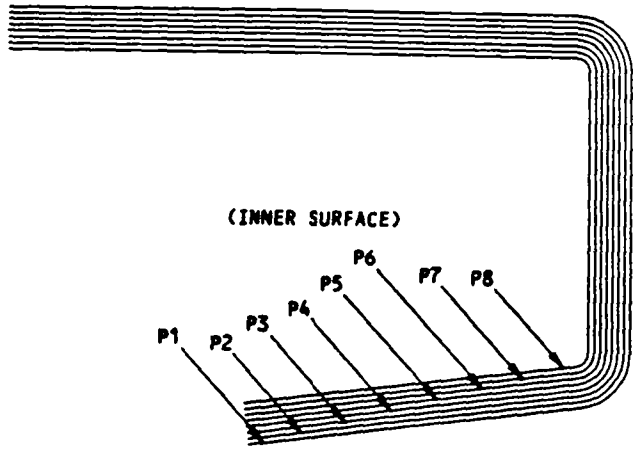

TYPICAL SECTION THRU LAMINATED SPAR

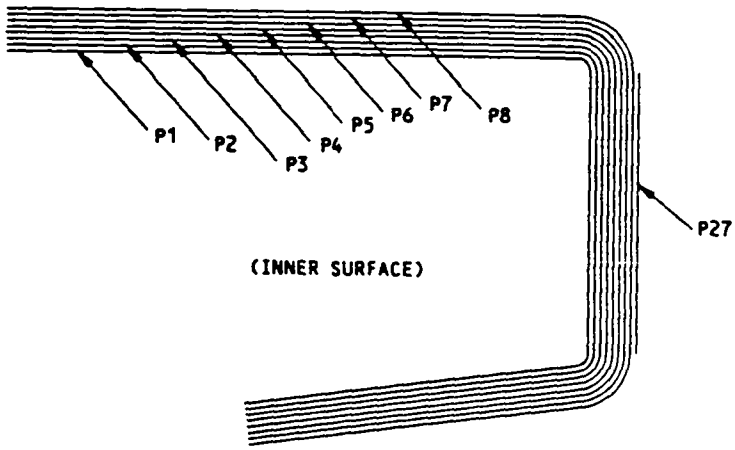

TYPICAL SECTION THRU LAMINATED SPAR AT
ACTUATOR FITTING LOCATIONS AND SPAR ENDS

SECTIONS THRU SPAR
DETAIL V
(DETAIL CONT ON NEXT PAGE)

Spoiler Structure Identification (Graphite Composite Spoiler)
Figure 7 (Sheet 6)

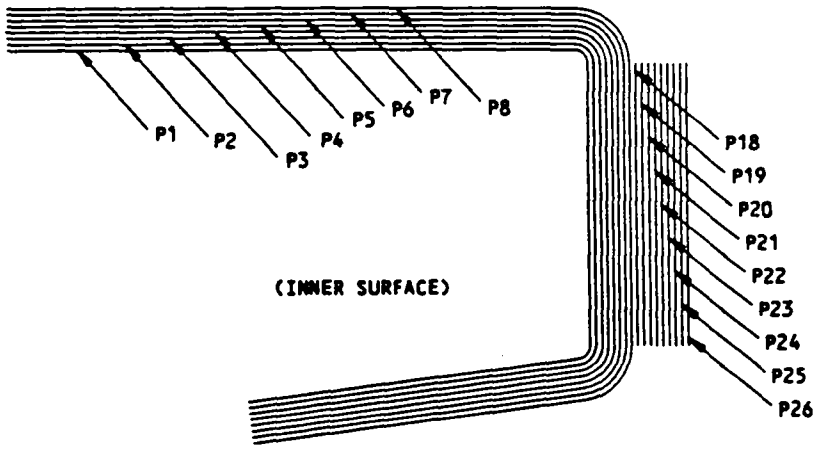

TYPICAL SECTION THRU LAMINATED SPAR
AT HINGE FITING LOCATIONS

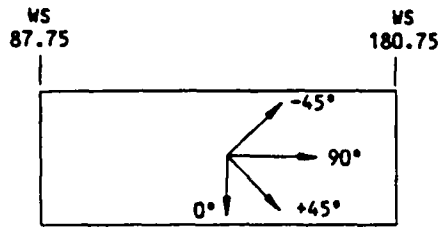

VIEW ON SPAR D

ITEM	PLY NO.	MATERIAL	PLY ORIENTATION
3 (DETAIL I)	P5,P9,P13,P18, P22	A	± 45°
	P4,P6,P12,P14, P21,P23		-45°
	P3,P7,P11,P15, P20,P24		90°
	P2,P8,P10,P16, P19,P25		0°
	P1,P17,P25,P27	C	OPTIONAL

PLY TABLE FOR SPAR E

SECTIONS THRU SPAR
DETAIL V (CONT)
Spoiler Structure Identification (Graphite Composite Spoiler)
Figure 7 (Sheet 7)

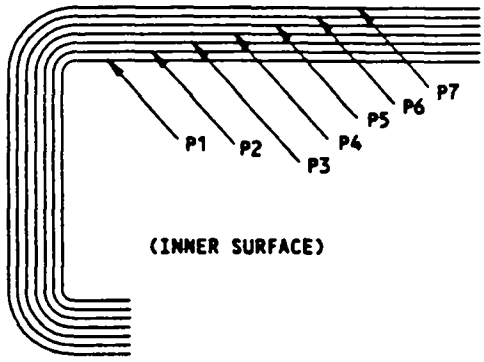

TYPICAL SECTION THRU LAMINATED RIB

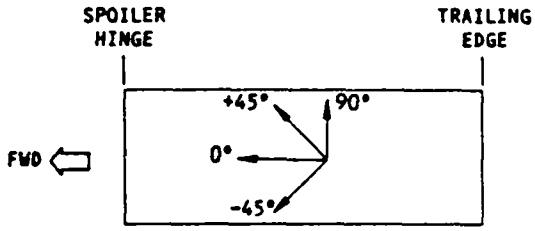

VIEW ON RIB [D]

ITEM	PLY NO.	MATERIAL	PLY ORIENTATION
1 (DETAIL II)	P2,P3,P6,P7	[B]	± 45°
	P4,P5	[B]	0° OR 90°
	P1	[C]	OPTIONAL

PLY TABLE FOR RIB [E]

DETAIL VI

Spoiler Structure Identification (Graphite Composite Spoiler)
Figure 7 (Sheet 8)

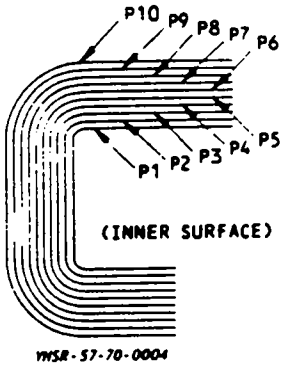

TYPICAL SECTION THRU LAMINATED SPAR

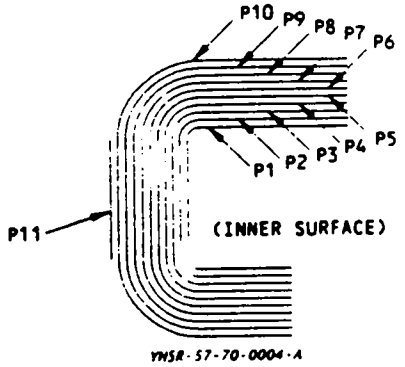

TYPICAL SECTION THRU LAMINATED SPAR
AT INBD AND OUTBD END

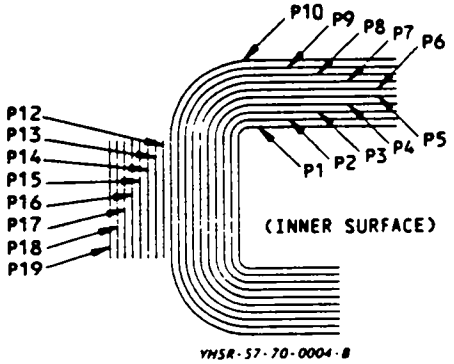

TYPICAL SECTION THRU LAMINATED SPAR
WITH DOUBLERS

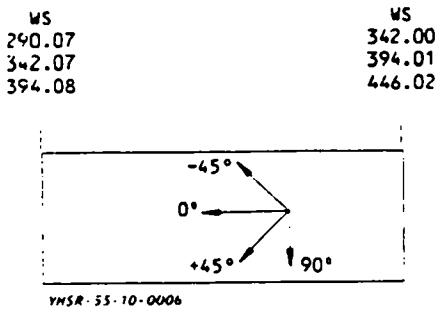

VIEW ON SPAR D

ITEM	PLY NO.	MATERIAL	PLY ORIENTATION
2 (DETAIL II)	P3,P5,P7,P9,P13, P15,P17	A	± 45°
	P4,P8,P12,P16		-45°
	P6,P14		90°
	P2,P10,P18		0°
	P1,P11,P19	C	OPTIONAL

PLY TABLE FOR SPAR E

DETAIL VII

Spoiler Structure Identification (Graphite Composite Spoiler)
Figure 7 (Sheet 9)

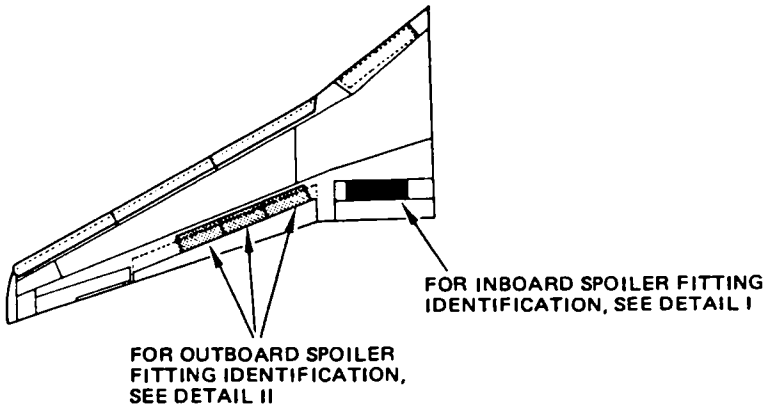

NOTE

- THIS FIGURE APPLIES TO GRAPHITE COMPOSITE SPOILERS ON 737-200 AIRPLANES, CUM LINE NUMBERS: 1003, 1012, 1013, 1018 THRU 1058, 1060 THRU 1120, 1186

Spoiler Fitting Identification
(Graphite Composite Spoilers)
Figure 8 (Sheet 1)

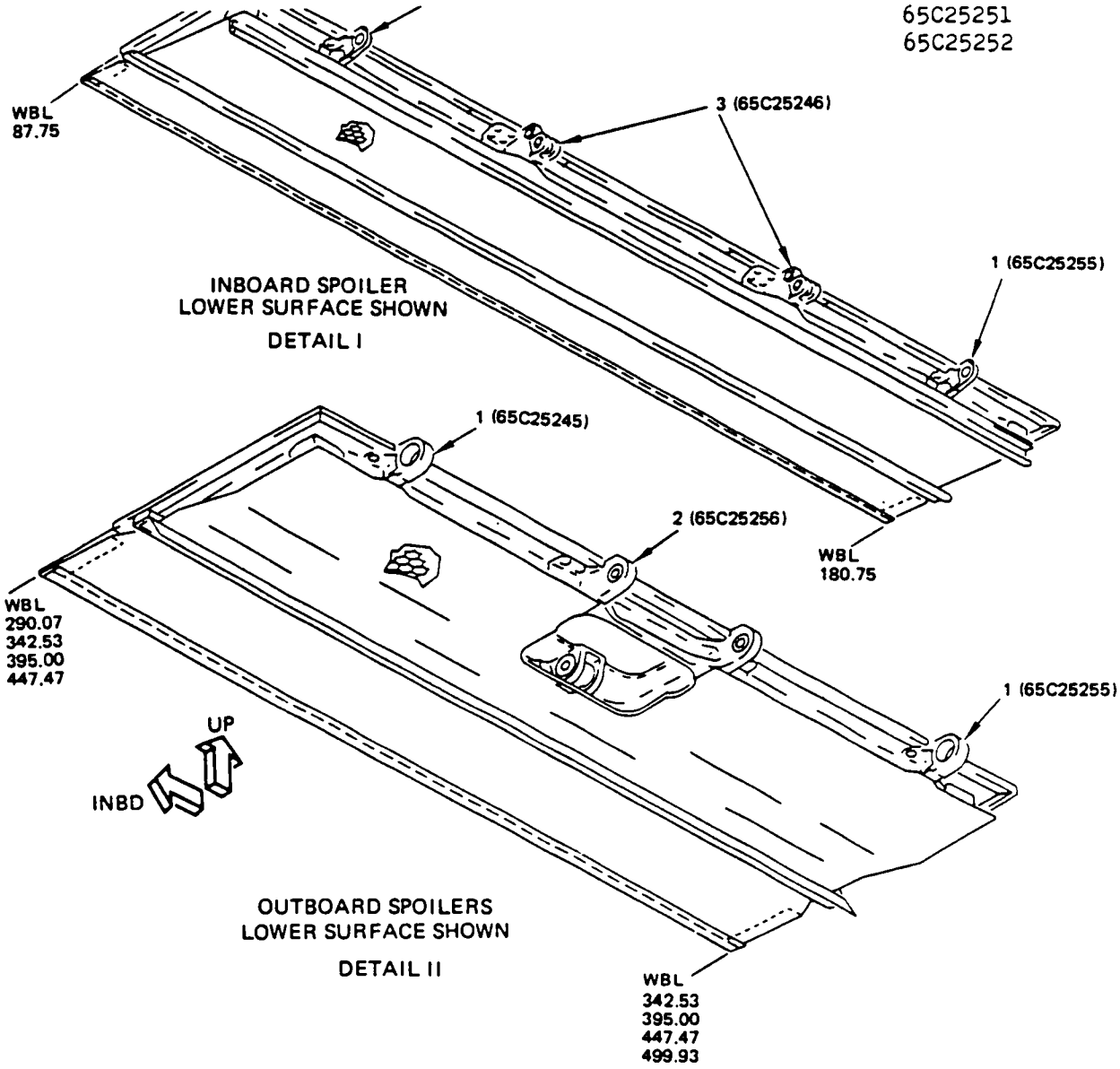

ITEM	DESCRIPTION	GAGE	MATERIAL	EFFECTIVITY
1	SLOTTED HINGE FITTING INBOARD, OUTBOARD SPOILER		FORGING 7075-T73	
2	CENTER HINGE FITTING		FORGING 7175-T736	
3	ACTUATOR ATTACHMENT FITTING		FORGING 7050-T736	

LIST OF MATERIALS FOR DETAILS I AND II

Spoiler Fitting Identification
(Graphite Composite Spoiler)
Figure 8 (Sheet 2)

APPLICABILITY
REFER TO SRM 57-50-3, FIGURE 8 FOR A LEADING EDGE SLAT SKIN REPAIR FORWARD OF NOSE BEAM.

REPAIR INSTRUCTIONS

1. Carefully make the cutout as shown in Detail I.
2. Make the repair parts given in Table I. Make the surface contour of the repair parts the same as the surface contour of the skin panel.
3. Assemble the repair parts. See Detail I.
4. Drill the fastener holes.
5. Disassemble the repair parts.
6. Remove all the nicks, scratches, gouges, burrs and sharp edges from the repair parts and the skin.
7. Apply a chemical conversion coating to the repair parts and to the bare surfaces of the skin. Refer to SRM 51-10-2.
8. Apply one layer of BMS 10-79, Type II or III primer to the repair parts and to the bare surfaces of the skins. Refer to SOPM 20-44-04.
9. Install the repair parts with BMS 5-63 high temperature sealant between the faying surfaces. Refer to SRM 57-30-5.

CAUTION: BLIND FASTENERS CAN BE USED ONLY IF YOU ARE SURE THAT THEY WILL BE SEATED CORRECTLY AGAINST THE DOUBLERS, OR OTHER INTERNAL STRUCTURE (IF PRESENT) KEEP SUFFICIENT FASTENER SPACING AND EDGE MARGINS.

10. Install the fasteners. Install the non-aluminum fasteners wet with BMS 5-63 sealant.
11. Apply BMS 5-63 sealant to the gap between the part 2 filler and the skin. Refer to SRM 51-70.
12. Apply the finish to the repair area. Refer to AMM 51-21.
13. Apply the erosion coating or tape as necessary. Refer to SRM 51-20-5.

NOTES

- THIS REPAIR WILL NOT HAVE AN EFFECT ON A STRUCTURALLY SIGNIFICANT ITEM (SSI) GIVEN IN SRM 51-00-4, FIG. 3. THUS NO CHANGE TO THE SUPPLEMENTAL STRUCTURAL INSPECTION DOCUMENT (SSID) INSPECTION PROGRAM IS NECESSARY.
- WHEN YOU USE THIS REPAIR, REFER TO:
  - AMM 51-21 FOR INTERIOR AND EXTERIOR FINISHES
  - SOPM 20-44-04 FOR APPLICATION OF CORROSION RESISTANT PRIMER
  - SRM 51-10-1 FOR INVESTIGATION AND CLEANUP OF DAMAGE
  - SRM 51-10-2 FOR PROTECTIVE TREATMENT OF METALS
  - SRM 51-20-4 FOR SEALING OF REPAIRS
  - SRM 51-20-5 FOR EROSION PROTECTION
  - SRM 51-30 FOR FASTENER CODE, REMOVAL, INSTALLATION, HOLE SIZES, EDGE MARGINS AND SUBSTITUTION
  - SRM 51-70 FOR AERODYNAMIC SMOOTHNESS
  - SRM 57-30-5 FOR LEADING EDGE SKIN REPAIR SEALING.

FASTENER SYMBOLS

⌖ REPAIR FASTENER LOCATION.

- IF YOU HAVE EASY ACCESS TO AFT OF THE NOSE BEAM, INSTALL A BACR15CE5D FASTENER.
- IF YOU DO NOT HAVE EASY ACCESS TO AFT OF THE NOSE BEAM, INSTALL A BACR15FP5E FASTENER. NAS1739E5 FASTENERS ARE ALTERNATIVES.

REPAIR PART		QTY	MATERIAL
1	DOUBLER	1	0.071 INCH THICK CLAD 2024-0, HEAT TREAT TO -T4
2	FILLER	1	0.063 INCH THICK CLAD 2024-0, HEAT TREAT TO -T4

TABLE I

Wing Leading Edge Slat Skin - Flush Repair Aft of the Nose Beam
Figure 1 (Sheet 1)

BOEING PROPRIETARY - Copyright © - Unpublished Work - See title page for details.

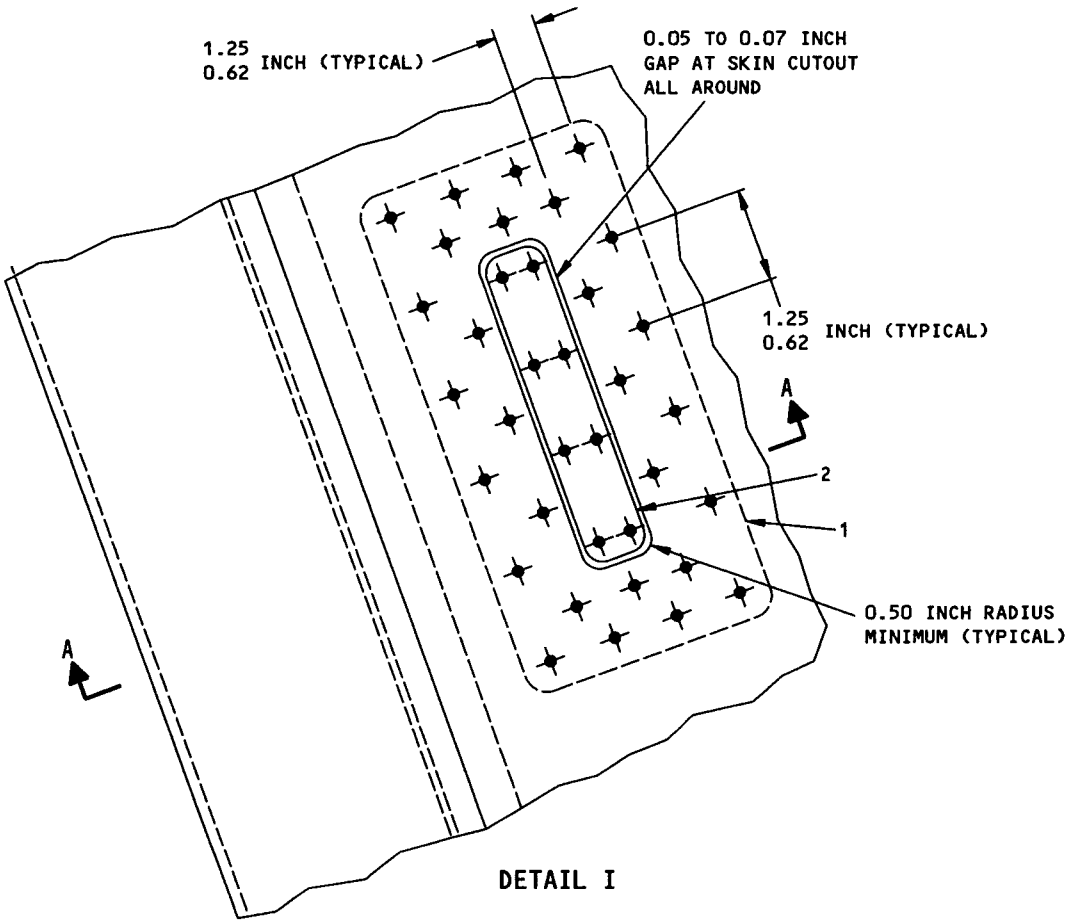

DETAIL I

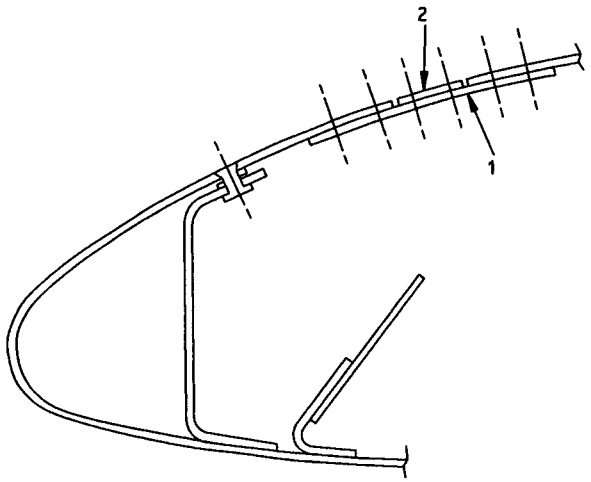

SECTION A-A

Wing Leading Edge Slat Skin - Flush Repair Aft of the Nose Beam
Figure 1 (Sheet 2)

BOEING PROPRIETARY - Copyright © - Unpublished Work - See title page for details.

REPAIR INSTRUCTIONS

1. Remove all equipment as necessary to gain access.
2. Locate and drill a 0.25 inch diameter stop hole through the skin at both ends of the damage. Refer to SRM 51-10-1.

   NOTE: If you make a cutout to remove the damage, make the cutout in a rectangular shape. Round corners to 0.50 inch radius.
3. Make the repair parts given in Table I. Make the surface contour of the repair parts the same as the surface contour of the skin.
4. Assemble the repair parts. See Detail I.
5. Drill the fastener holes.
6. Disassemble the repair parts.
7. Remove all nicks, scratches, gouges, burrs and sharp edges from the repair parts and the skin.
8. Apply a chemical conversion coating to the repair parts and to the bare surfaces of the skin. Refer to SRM 51-10-2.
9. Apply one layer of BMS 10-79, Type II or III primer to the repair parts and to the bare surfaces of the skin. Refer to SOPM 20-44-04.
10. Install the repair parts with BMS 5-95 sealant between the faying surfaces. Refer to SRM 57-30-5.
11. Install the fasteners wet with BMS 5-95 sealant. Refer to SRM 57-30-5.
12. Apply a fillet seal with BMS 5-95 sealant along the edges of the part and internal doubler. Refer to SRM 57-30-5.
13. Apply the finish to the repair area. Refer to SRM 51-20-5 and AMM 51-21.

NOTES

- THE REPAIR WILL NOT HAVE AN EFFECT ON THE STRUCTURALLY SIGNIFICANT ITEMS (SSI'S) GIVEN IN SRM 51-00-4, FIG. 3. THUS NO CHANGE TO THE SUPPLEMENTAL STRUCTURAL INSPECTION DOCUMENT (SSID) INSPECTION PROGRAM IS NECESSARY.
- INSTALL THE FASTENERS BY SQUEEZE RIVETING WHENEVER POSSIBLE. IF YOU HAND DRIVE THE FASTENERS, USE CAUTION AND MAKE A VISUAL INSPECTION FOR CRACKS IN THE CASTING AFTER YOU HAVE INSTALLED THE FASTENERS.
- WHEN YOU USE THIS REPAIR, REFER TO:
  - AMM 51-21 FOR INTERIOR AND EXTERIOR FINISHES
  - SOPM 20-44-04 FOR APPLICATION OF CORROSION RESISTANT PRIMER
  - SRM 51-10-1 FOR INVESTIGATION AND CLEANUP OF DAMAGE AND STOP DRILLING
  - SRM 51-10-2 FOR PROTECTIVE TREATMENT OF METALS
  - SRM 51-20-5 FOR EROSION PROTECTION
  - SRM 51-30 FOR FASTENER CODE, REMOVAL, INSTALLATION, HOLE SIZES, EDGE MARGINS AND SUBSTITUTION
  - SRM 51-70 FOR AERODYNAMIC SMOOTHNESS
  - SRM 57-30-5 FOR LEADING EDGE SKIN REPAIR SEALING
- D = FASTENER DIAMETER

[A] USE THIS PART IF YOU MAKE A CUTOUT IN THE SKIN

[B] THE SAME GAGE AS THE INITIAL FLAP SKIN.

FASTENER SYMBOLS

REPAIR FASTENER LOCATION. INSTALL A BACR15BA5AD FASTENER. MS20426B5 FASTENER IS AN ALTERNATIVE.

REPAIR MATERIALS			
REPAIR PART		QTY	MATERIAL
1	INTERNAL DOUBLER	1	0.050 INCH THICK CLAD 2024-T3
2	EXTERNAL DOUBLER	1	0.050 INCH THICK CLAD 2024-T3
3	FILLER [A]	1	CLAD 2024-T3 [B]

TABLE I

Wing Leading Edge Flap Skin - External Repair Between Ribs
Figure 2 (Sheet 1)

BOEING PROPRIETARY - Copyright © - Unpublished Work - See title page for details.

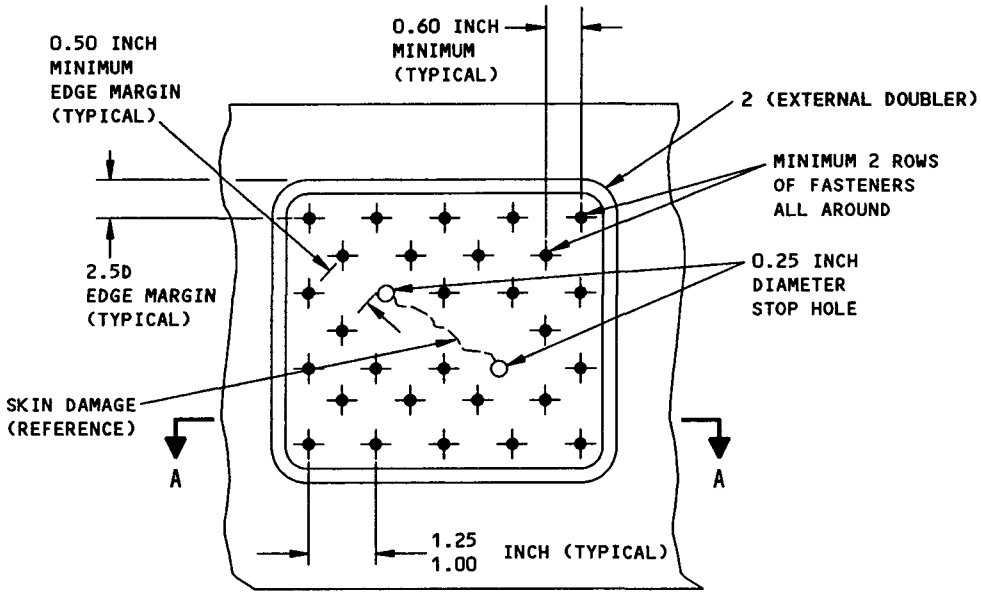

DETAIL I

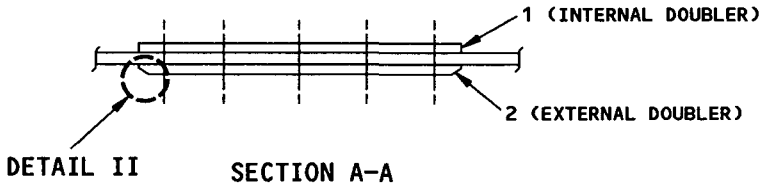

SECTION A-A

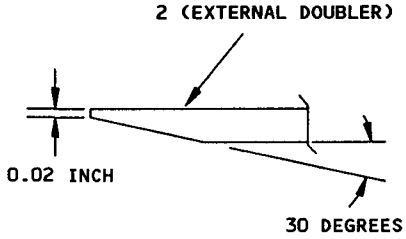

DETAIL II

Wing Leading Edge Flap Skin - External Repair Between Ribs
Figure 2 (Sheet 2)

BOEING PROPRIETARY - Copyright © - Unpublished Work - See title page for details.

REPAIR INSTRUCTIONS

1. Remove all equipment as necessary to gain access.
2. Carefully make the cutout as necessary.
3. Make the repair parts given in Table I. Make the surface contour of the repair parts the same as the surface contour of the skin.
4. Assemble the repair parts. See Detail II.
5. Drill the fastener holes.
6. Disassemble the repair parts.
7. Remove all the nicks, scratches, gouges, burrs and sharp edges from the repair parts and the skin.
8. Apply a chemical conversion coating to the repair parts and to the bare surfaces of the skin. Refer to SRM 51-10-2.
9. Apply one layer of BMS 10-79, Type II or III primer to the repair parts and to the bare surfaces of the skins. Refer to SOPM 20-44-04.
10. Install the repair parts with BMS 5-63 high temperature sealant between the faying surfaces. Refer to SRM 57-30-5.
11. Install the fasteners.
12. Apply the finish to the repair area. Refer to AMM 51-21.

NOTES

- THIS REPAIR WILL NOT HAVE AN EFFECT ON THE STRUCTURALLY SIGNIFICANT ITEMS (SSI'S) GIVEN IN SRM 51-00-4, FIG.3. THUS NO CHANGE TO THE SUPPLEMENTAL STRUCTURAL INSPECTION DOCUMENT (SSID) INSPECTION PROGRAM IS NECESSARY.
- INSTALL FASTENERS BY SQUEEZE RIVETING WHENEVER POSSIBLE. IF YOU PREFER TO HAND DRIVE FASTENERS, THEN USE EXTREME CAUTION AND MAKE A VISUAL INSPECTION FOR CRACKS IN THE CASTING AFTER FASTENER INSTALLATION.
- D = DIAMETER OF THE REPAIR FASTENER
- WHEN YOU USE THIS REPAIR, REFER TO:
  - AMM 51-21 FOR INTERIOR AND EXTERIOR FINISHES
  - SOPM 20-44-04 FOR APPLICATION OF CORROSION RESISTANT PRIMER
  - SRM 51-10-1 FOR INVESTIGATION AND CLEANUP OF DAMAGE
  - SRM 51-10-2 FOR PROTECTIVE TREATMENT OF METALS
  - SRM 51-30 FOR FASTENER CODE, REMOVAL, INSTALLATION, HOLE SIZES, EDGE MARGINS AND SUBSTITUTION
  - SRM 51-70 FOR AERODYNAMIC SMOOTHNESS.
  - SRM 51-20-5 FOR EROSION PROTECTION

FASTENER SYMBOLS

REPAIR FASTENER LOCATION, INSTALL A BACR15CE5B FASTENER. MS20426B5 FASTENER IS AN ALTERNATIVE.

REPAIR FASTENER LOCATION. INSTALL A BACR15BB5B FASTENER. MS20470B5 FASTENER IS AN ALTERNATIVE.

REPAIR MATERIAL			
REPAIR PART		QTY	MATERIAL
1	ANGLE	2	0.063 INCH CLAD 2024-0 HEAT TREAT TO -T4
2	FILLER	1	CLAD 2024-T3 SAME THICKNESS AS THE INITIAL RIB
3	FILLER	1	CLAD 2024-T3 SAME THICKNESS AS THE INITIAL FLAP
4	PLATE	1	0.05 INCH CLAD 2024-T3

TABLE I

Wing Leading Edge Flap Skin - External Repair at the Ribs
Figure 3 (Sheet 1)

BOEING PROPRIETARY - Copyright © - Unpublished Work - See title page for details.

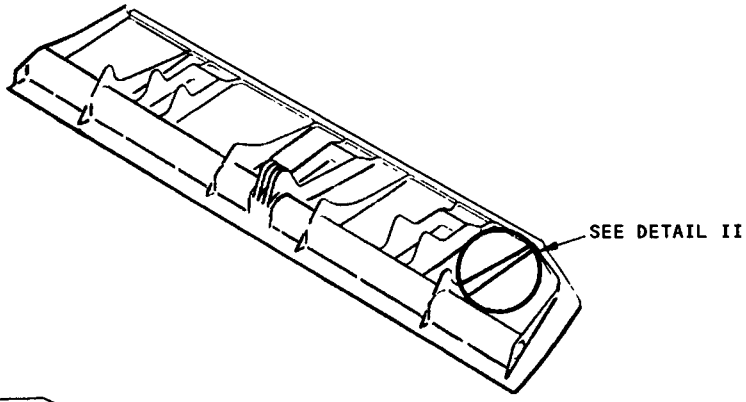

REFERENCE VIEW ONLY - ACTUAL FLAP CONFIGURATION AND LOCATION CAN VARY

DETAIL I

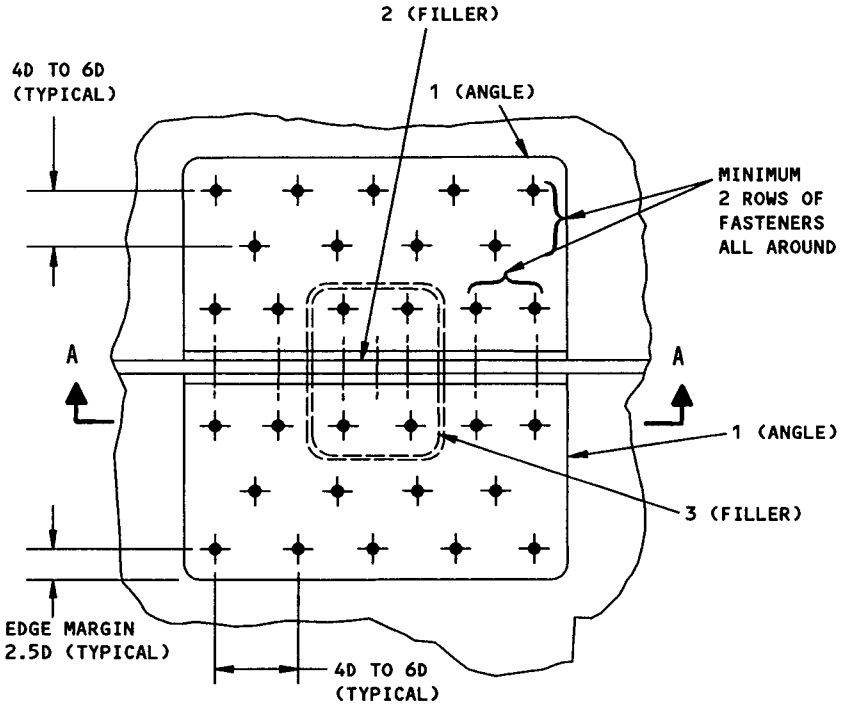

DETAIL II

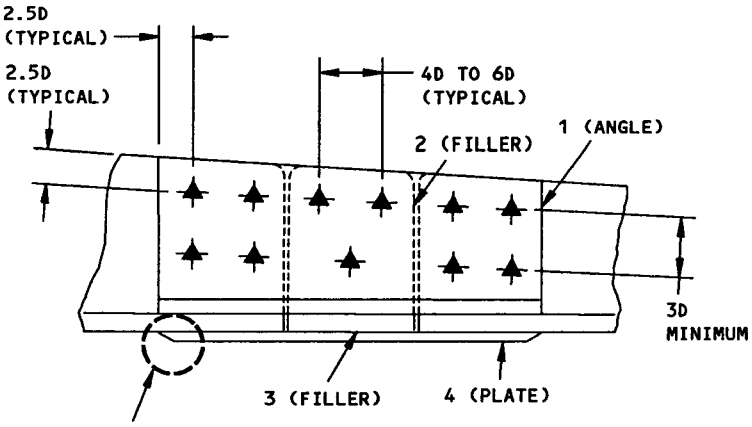

SECTION A-A

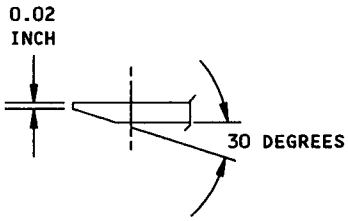

DETAIL III

Wing Leading Edge Flap Skin - External Repair at the Ribs
Figure 3 (Sheet 2)

BOEING PROPRIETARY - Copyright © - Unpublished Work - See title page for details.

REPAIR INSTRUCTIONS

1. Remove equipment as necessary to obtain access to repair area.
2. Carefully cut and remove the damaged section of the beam. See Detail I or II as applicable.
3. Make all the repair parts.
4. Assemble the repair parts and drill the fastener holes.
5. Disassemble the repair parts.
6. Remove all nicks, scratches, burrs, sharp edges from initial and repair parts.
7. Apply a chemical conversion coating to the repair parts and the cut edges of the initial parts. Refer to SRM 51-10-2.
8. Apply one coat of BMS 10-79, Type II or III primer to repair parts and the cut edges of the initial parts. Refer to SOPM 20-44-04.
9. Install the repair parts making a faying surface seal with BMS 5-63 sealant. Refer to SRM 57-30-5.
10. Install fasteners wet with BMS 5-63 sealant.
11. Apply the finish to the repair area. Refer to AMM 51-21.

NOTES

- THIS REPAIR WILL NOT HAVE AN EFFECT ON A STRUCTURALLY SIGNIFICANT ITEM (SSI) GIVEN IN SRM 51-00-4, FIG. 3. THUS, NO CHANGE TO THE SUPPLEMENTAL STRUCTURAL INSPECTION DOCUMENT (SSID) INSPECTION PROGRAM IS NECESSARY.
- ALL DIMENSIONS ARE IN INCHES
- WHEN YOU USE THIS REPAIR, REFER TO:
  - AMM 51-21 FOR INTERIOR AND EXTERIOR FINISHES
  - SOPM 20-44-04 FOR APPLICATION OF CORROSION RESISTANT PRIMER
  - SRM 51-10-1 FOR INVESTIGATION AND CLEANUP OF DAMAGE
  - SRM 51-10-2 FOR PROTECTIVE TREATMENT OF METALS
  - SRM 51-20-4 FOR SEALING OF REPAIRS
  - SRM 51-20-5 FOR EROSION PROTECTION
  - SRM 51-30 FOR FASTENER CODE, REMOVAL, INSTALLATION, HOLE SIZES, EDGE MARGINS AND SUBSTITUTION
  - SRM 51-70 FOR AERODYNAMIC SMOOTHNESS
  - SRM 57-30-5 FOR LEADING EDGE SKIN REPAIR SEALING.
- D = FASTENER DIAMETER

[A] USE SAME THICKNESS SPACER AS INITIAL REPAIR.

FASTENER SYMBOLS

- INITIAL FASTENER LOCATION, INSTALL A BACB30HA6 HEX-DRIVE FASTENER WITH BACC30P COLLAR.
- REPAIR FASTENER LOCATION, INSTALL A BACB30HA6 HEX-DRIVE FASTENER WITH BACC30P COLLAR.
- REPAIR FASTENER LOCATION, INSTALL A BACR15BB5D FASTENER.
- REPAIR FASTENER LOCATION, INSTALL A BACR15FR5M BLIND FASTENER. NAS1738MW5 IS AN ACCEPTABLE SUBSTITUTE.

REPAIR MATERIAL			
PART		QTY	MATERIAL
1	DOUBLER	1	0.080 INCH THICK 2024-T4 CLAD
2	ANGLE FILLER	1	0.063 INCH THICK 2024-T4 CLAD
3	SPACER	2	2024-T4 CLAD [A]

Wing Leading Edge Slat Spar Repair
Figure 4 (Sheet 1)

BOEING PROPRIETARY - Copyright © - Unpublished Work - See title page for details.

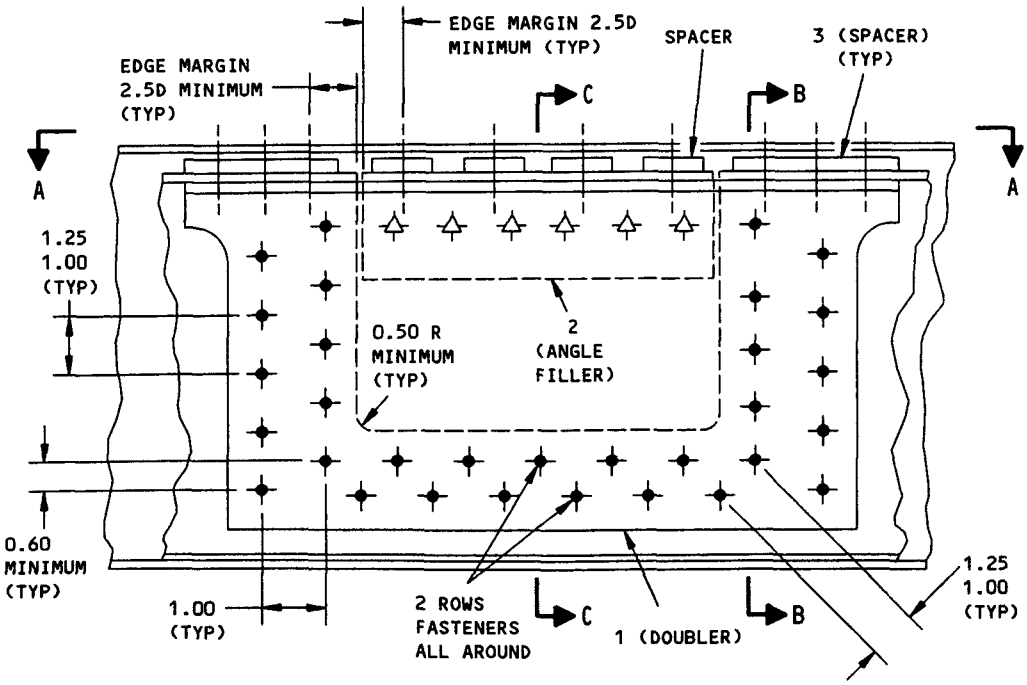

REPAIR INSTALLATION IF UPPER FLANGE DAMAGED
DETAIL I

TOP VIEW ON THE SLAT SURFACE
SECTION A-A

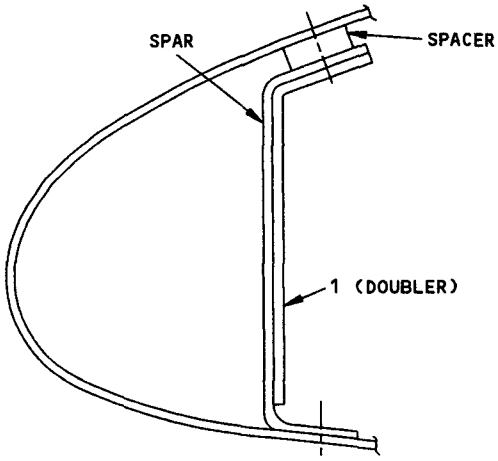

SECTION B-B

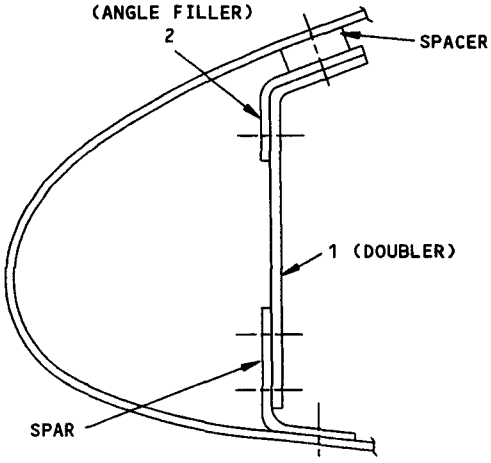

SECTION C-C

Wing Leading Edge Slat Spar Repair
Figure 4 (Sheet 2)

BOEING PROPRIETARY - Copyright © - Unpublished Work - See title page for details.

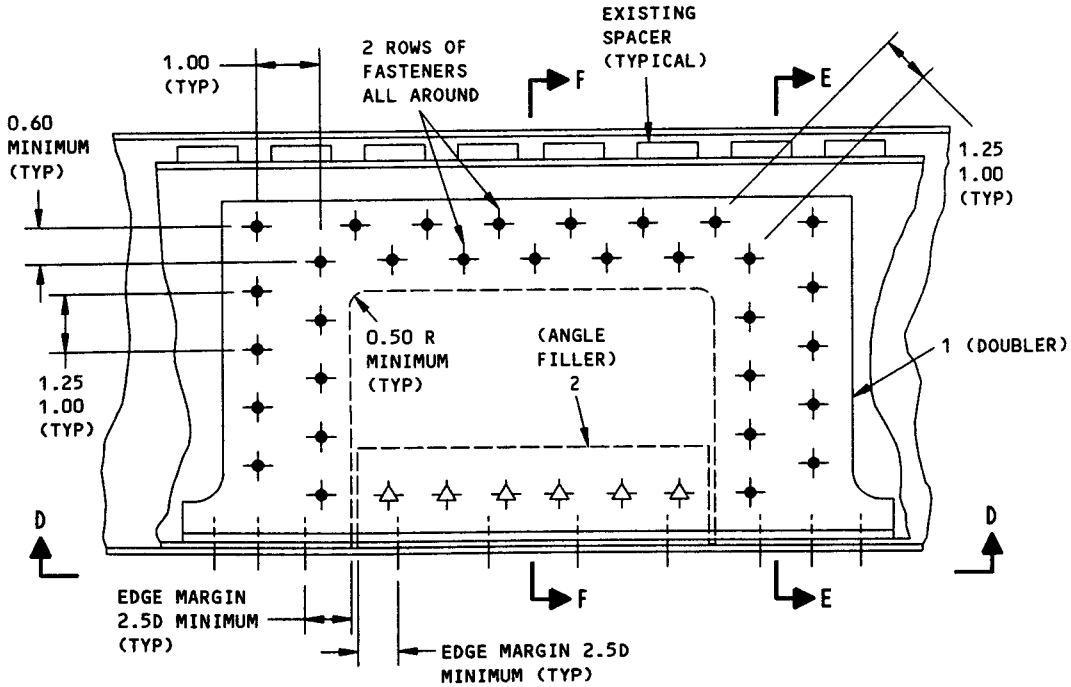

REPAIR INSTALLATION IF LOWER FLANGE DAMAGED
DETAIL II

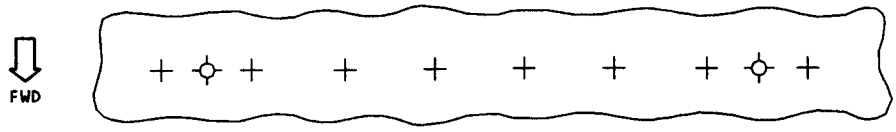

BOTTOM VIEW ON THE SLAT SURFACE
SECTION D-D

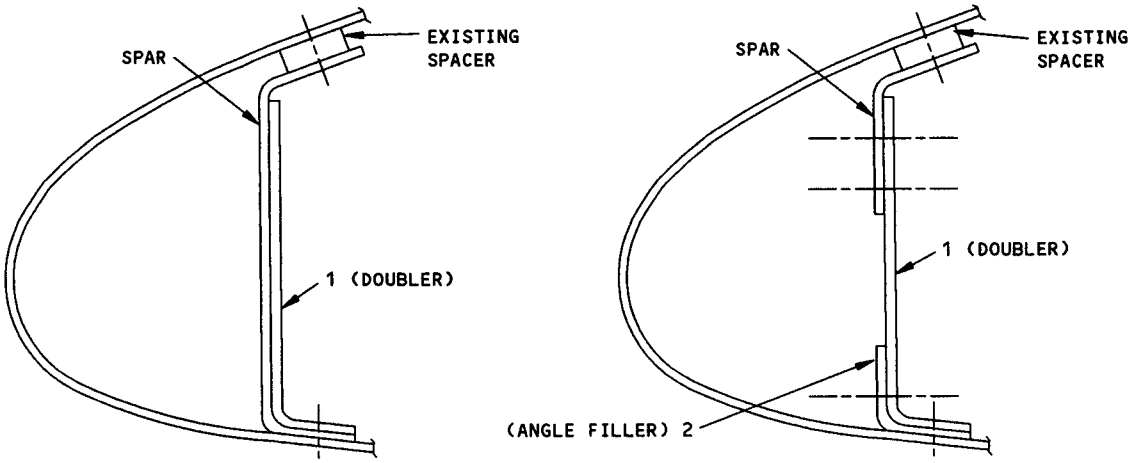

SECTION E-E

SECTION F-F

Wing Leading Edge Slat Spar Repair
Figure 4 (Sheet 3)

BOEING PROPRIETARY - Copyright © - Unpublished Work - See title page for details.

REPAIR INSTRUCTIONS

1. Remove access panels as necessary to use this repair.
2. Carefully cut out the damaged skin and remove fasteners as necessary. Do not damage trailing edge extrusion. Allow edge margin at existing fasteners.
3. Make the repair parts given in Table I and shown in Detail I. Make the surface contour of the repair parts the same as the surface contour of the aft skin
4. Assemble the repair parts. See Detail I.
5. Drill the fastener holes.
6. Disassemble the repair parts.
7. Remove all nicks, scratches, burrs, and sharp edges from the initial and the repair parts.
8. Apply a protective chemical conversion coating to the repair parts and the cut edges of the initial parts. Refer to SRM 51-10-2.
9. Apply one coat of BMS 10-79, Type II or Type III primer to repair parts and the cut edges of the initial parts. Refer to SOPM 20-44-04.
10. Install the Part 2 splice plates to the aft skin with BMS 5-63 sealant between the mating surfaces. Refer to SRM 57-30-5.
11. Install the Part 1 plate. Install the non-aluminum fasteners wet with BMS 5-63 high temperature sealant.
12. Apply a fillet seal with BMS 5-63 sealant along the edges of the repair parts. Refer to SRM 51-30-5.
13. Apply the finish to the repair area. Refer to AMM 51-21.
14. Install the access panels if removed.

NOTES

- THIS REPAIR WILL NOT HAVE AN EFFECT ON A STRUCTURALLY SIGNIFICANT ITEM (SSI) GIVEN IN SRM 51-00-4, FIG. 3. THUS, NO CHANGE TO THE SUPPLEMENTAL STRUCTURAL INSPECTION DOCUMENT (SSID) INSPECTION PROGRAM IS NECESSARY.
- WHEN YOU DO THIS REPAIR, REFER TO:
  - AMM 51-21 FOR INTERIOR AND EXTERIOR FINISHES
  - SOPM 20-44-04 FOR APPLICATION OF CORROSION RESISTANT PRIMER
  - SRM 51-10-1 FOR INVESTIGATION AND CLEANUP OF DAMAGE
  - SRM 51-10-2 FOR PROTECTIVE TREATMENT OF METALS.
  - SRM 51-20-4 FOR SEALING OF REPAIRS
  - SRM 51-30 FOR FASTENER CODE, REMOVAL, INSTALLATION, HOLE SIZES, EDGE MARGINS AND SUBSTITUTION
- D = FASTENER DIAMETER

FASTENER SYMBOLS

REFERENCE FASTENER LOCATION.

INITIAL FASTENER LOCATION. INSTALL A BACR15FP5E FASTENER. NAS1739E5 IS AN ALTERNATIVE FASTENER.

REPAIR FASTENER LOCATION. INSTALL A BACR15CE5D FASTENER.

REPAIR FASTENER LOCATION. INSTALL A BACR15FP5E FASTENER. NAS1739E5 IS AN ALTERNATIVE FASTENER.

REPAIR MATERIAL			
PART		QTY	MATERIAL
1	PLATE	1	0.063 INCH THICK CLAD 2024-T4
2	SPLICE PLATE	2	0.08 INCH THICK CLAD 2024-T4

TABLE I

Slat Repair - Aft Skin
Figure 5 (Sheet 1)

BOEING PROPRIETARY - Copyright © - Unpublished Work - See title page for details.

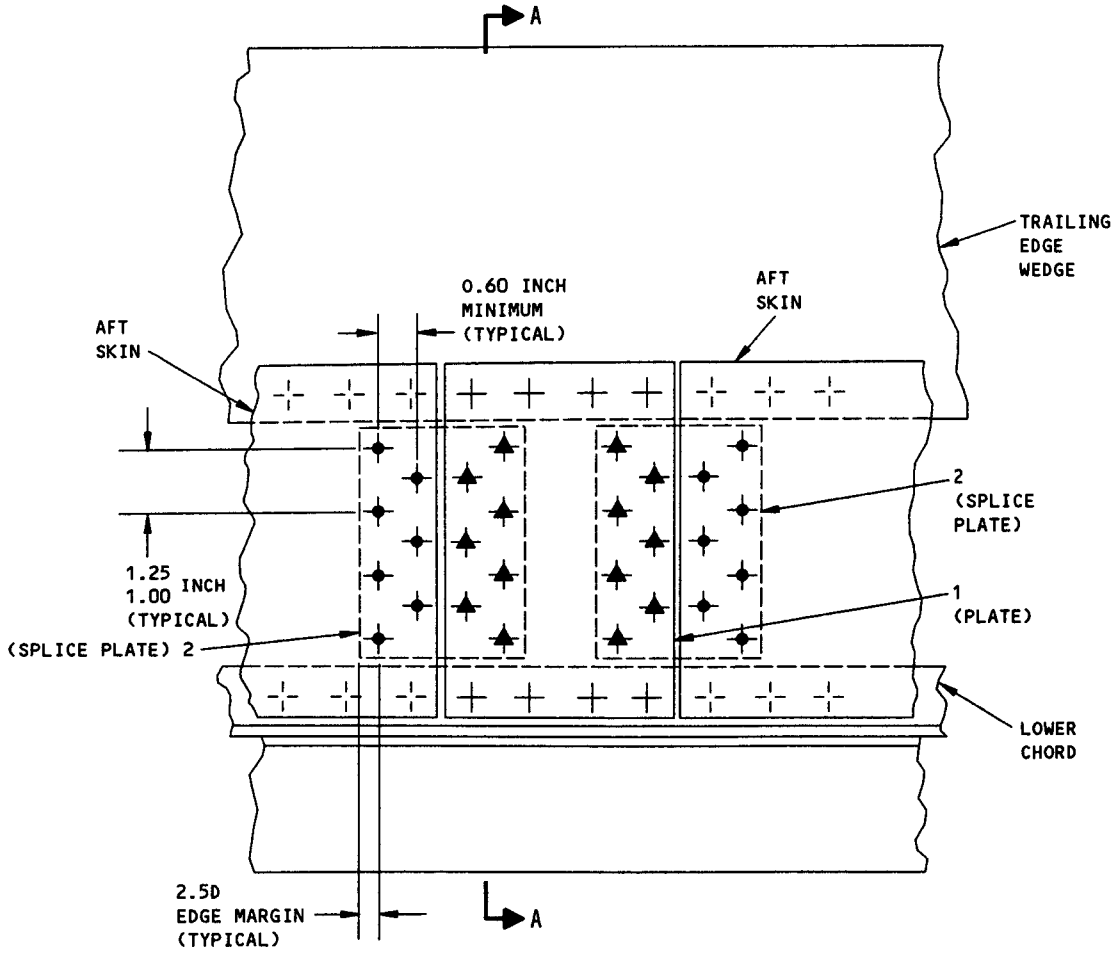

BOTTOM VIEW
DETAIL I

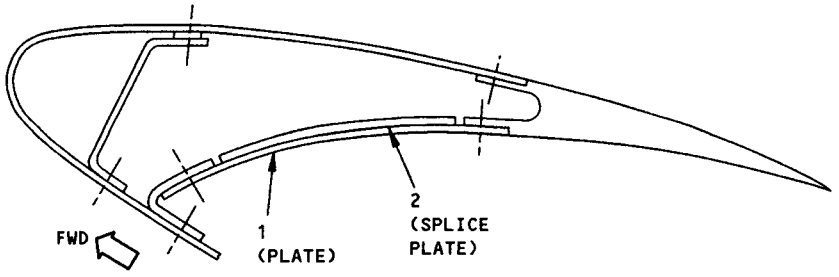

ROTATED 90° CLOCKWISE
SECTION A-A

Slat Repair - Aft Skin
Figure 5 (Sheet 2)

BOEING PROPRIETARY - Copyright © - Unpublished Work - See title page for details.

DAMAGE CLEANUP

A. For slight erosion of leading edges of wing slats the operator may choose to repair the affected areas. Flight operation is not allowed if leading edge roughness is equivalent to or greater than that of 240 grit sandpaper. Repair the affected areas as follows:

WARNING: CLEANING AND COATING MATERIALS ARE TOXIC AND FLAMMABLE. USE ADEQUATE VENTILATION AND PROPER FIRE PRECAUTIONS.

(1) Mask the unaffected areas.

(2) Clean the surface with cheesecloth moistened with water.

(3) Polish or sand the affected area to a smooth surface and to a depth not to exceed 25% of the original skin thickness.

NOTE: Use aluminum oxide abrasives or aluminum wool. Do not use silicon carbide abrasives or steel wool.

(4) Blend the depressions into the surrounding area using powdered household cleanser or 400 grit aluminum oxide paper. Refer to section A-A for blending requirements.

(5) Wipe area clean using clean cheesecloth moistened with MEK or MIBK.

(6) Determine the depth of material removed by the use of a Vidigage, Branson digital caliper, dial gage or straight edge and feeler gages, whichever method is most suitable. If the amount of material removed exceeds 25% of the original skin thickness, contact The Boeing Company for instructions. If the amount of material removed does not exceed 25% of the original skin thickness, apply Alodine 1000 to the repaired surfaces per 51-10-2, allow to cure for at least 8 hours at 70-75°F and a relative humidity of 40-50% and return the airplane to service.

NOTE: See 57-50-1, figure 2 for allowable damage limits for other types of damage.

B. For additional protection against erosion of leading edges of wing slats, especially where erosion is moderate to severe, the leading edges may be refinished with Astrocoat which can be replaced when it becomes eroded to a roughness equivalent to or in excess of that of 240 grit sandpaper. Cleanup of eroded areas using an abrasive blast, which provides for minimum removal of metal, is recommended.

(1) Mask unaffected areas and close off and seal openings to prevent entry of foreign matter.

Wing Leading Edge Slat-Skin Erosion Repair
Figure 6 (Sheet 1)

(2) Static ground both the airplane and the abrasive blast equipment.

(3) Spray clean the eroded area with water MEK or toluene. If an eroded protective coating is to be replaced, soak the coating beneath cheesecloth saturated with MEK or MIBK until coating is sufficiently soft and remove with a plastic scraper.

(4) Abrasive blast the eroded area per 51-10-6, ensuring that all of the oxide and/or corrosion have been removed from the eroded area.

CAUTION: DO NOT USE CHEESECLOTH OR ANY OTHER FABRIC TO CLEAN THE BLASTED AREA. LINT DEPOSITED ON BLASTED AREA. WHEN COVERED WITH ASTROCOAT SHORTENS THE LIFE OF ASTROCOAT.

(5) Determine the depth of material removed. If the amount of material removed exceed 25% of the original skin thickness, contact the Boeing Company for instructions. If the amount of material removed does not exceeds 25% of the original skin thickness, apply Alodine 1200 with nylon brush. Do not use cheesecloth or any other fabric.

(6) Spray clean with water.

NOTE: If the metal had been sanded and it remains smooth, the area may be wiped clean with solvent, Series 84 (Ref AMM/SOPM 20-30-84) and cheesecloth.

(7) Apply Astrocoat per 51-20-5, ensuring that the full thickness of Astrocoat completely covers the area subjected to erosion. Symmetry between left and right wing should be maintained with respect to erosion coating.

(8) After the final application, cure in accordance with 51-20-5 before returning the airplane to service.

NOTES

- THIS REPAIR WILL NOT HAVE AN EFFECT ON A STRUCTURALLY SIGNIFICANT ITEM (SSI) GIVEN IN SRM 51-00-4, FIG. 3. THUS, NO CHANGE TO THE SUPPLEMENTAL STRUCTURAL INSPECTION DOCUMENT (SSID) INSPECTION PROGRAM IS NECESSARY.

Wing Leading Edge Slat-Skin Erosion Repair
Figure 6 (Sheet 2)

BOEING PROPRIETARY - Copyright © - Unpublished Work - See title page for details.

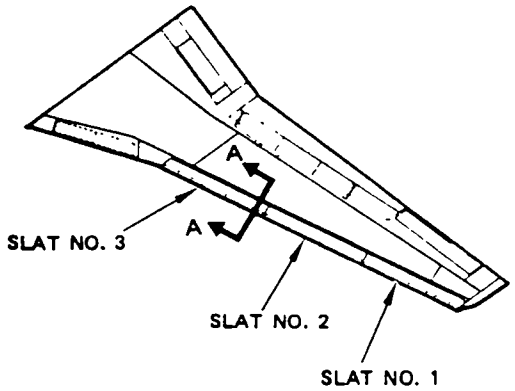

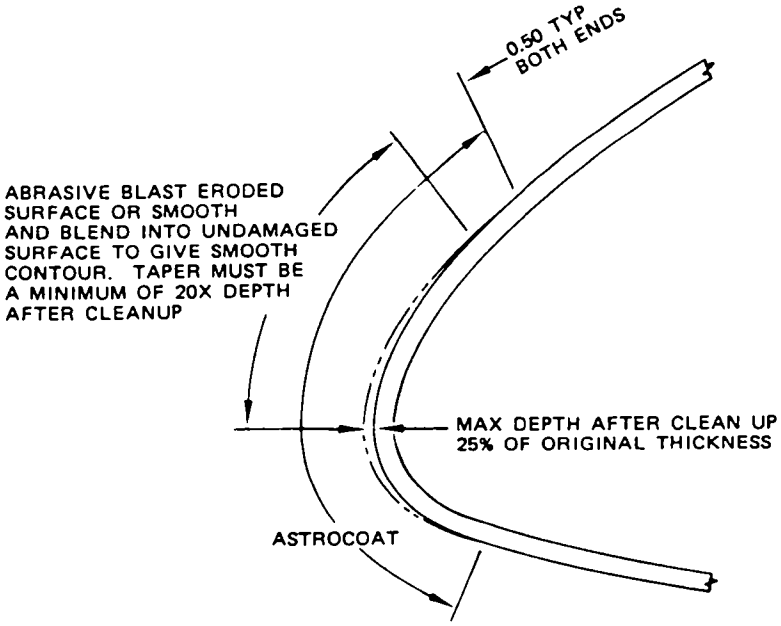

SECTION A–A

Wing Leading Edge Slat - Skin Erosion Repair
Figure 6 (Sheet 3)

APPLICABILITY

THIS REPAIR MUST BE LOCATED INBOARD OF SLAT STATION 210.0 OR OUTBOARD OF SLAT STATION 378.0. IF ANY PART OF YOUR REPAIR WILL BE BETWEEN THESE SLAT STATIONS, CONTACT THE BOEING COMPANY FOR AERODYNAMIC ANALYSIS BEFORE YOU USE THIS REPAIR.

REPAIR INSTRUCTIONS

1. Carefully cut and remove the damaged part of the skin. Make all the corner radii 0.50 inch or more.
2. Make all the repair parts. Form all the repair parts to the contour of the initial skin. See Table I and Detail I.
3. Assemble the repair parts and drill the fastener holes.
4. Disassemble the repair parts.
5. Back drill thermal anti-ice (TAI) vent holes through external doubler if applicable.
6. Use aluminum fillers between internal doubler (item 2) and the existing nose skin at chem-milled areas, if applicable.
7. Shave spacer rivets .032 inch to accommodate internal doubler at upper nose beam connection.
8. Use tapered aluminum fillers (item 4) on either side of internal doubler at lower nose beam to skin connection. Taper as necessary.
9. Remove all nicks, scratches, burrs, and sharp edges from the skin and the repair parts.
10. Apply a chemical conversion coating to the repair parts and to the bare edges of the skin. Refer to SRM 51-10-2.
11. Apply one layer of BMS 10-79, Type III primer to the repair parts and to the bare edges of the skin. Refer to SOPM 20-44-04.
12. Install the internal doubler (item 2) and the external doubler (item 3) with BMS 5-95 sealant between the faying surfaces.
13. Install the fasteners wet with BMS 5-95 sealant.
14. Fill the gap between the skin and the repair parts with BMS 5-95 sealant. Refer to SRM 51-70.
15. Apply a layer of BMS 10-11 Type II finish to the repair area. Refer to SOPM 20-41-02.

NOTES

- THIS REPAIR WILL NOT HAVE AN EFFECT ON A STRUCTURALLY SIGNIFICANT ITEM (SSI) GIVEN IN SRM 51-00-4, FIG. 3. THUS, NO CHANGE TO THE SUPPLEMENTAL STRUCTURAL INSPECTION DOCUMENT (SSID) INSPECTION PROGRAM IS NECESSARY.
- WHEN YOU USE THIS REPAIR REFER TO:
  - SOPM 20-41-02 FOR APPLICATION OF FINISHES
  - SOPM 20-44-04 FOR APPLICATION OF EXTERNAL AND INTERNAL FINISHES
  - SRM 51-10-1 FOR INVESTIGATION AND CLEANUP OF DAMAGE
  - SRM 51-10-2 FOR PROTECTIVE TREATMENT OF METAL
  - SRM 51-20-4 FOR SEALING OF REPAIRS
  - SRM 51-30 FOR FASTENER CODE, REMOVAL, INSTALLATION, HOLE SIZES, AND EDGE MARGINS.
  - SRM 51-70 FOR AERODYNAMIC SMOOTHNESS
- D = FASTENER DIAMETER

[A] USE TWO SPLICES IF THE DAMAGE IS NOT NEAR THE END OF THE SLAT. USE ONE SPLICE IF THE DAMAGE IS NEAR THE END OF THE SLAT.

FASTENER SYMBOLS

REFERENCE FASTENER LOCATION.

INITIAL FASTENER LOCATION. INSTALL THE SAME TYPE AND DIAMETER FASTENER AS THE INITIAL FASTENER (UP TO 1/32 INCH DIAMETER OVERSIZE).

INITIAL FASTENER LOCATION. INSTALL THE SAME TYPE AND DIAMETER FASTENER AS THE INITIAL FASTENER (UP TO 1/32 INCH DIAMETER OVERSIZE). AS AN ALTERNATIVE INSTALL A PLT1058L6 OR PLT5470L6 BLIND BOLT OR A CR3524-6 BLIND RIVET.

REPAIR FASTENER LOCATION. INSTALL A BACR15CE5D RIVET (DOUBLE FLUSH).

REPAIR FASTENER LOCATION. INSTALL A BACR15CE6M RIVET.

REPAIR FASTENER LOCATION. INSTALL A PLT1058L6 OR PLT5470L6 BLIND BOLT. AS AN ALTERNATIVE INSTALL A CR3524-6 BLIND RIVET.

REPAIR MATERIAL			
PART		QTY	MATERIAL
1	SKIN	1	CLAD 7075-T6, SAME THICKNESS AS THE THICKEST LOCATION
2	INTERNAL DOUBLER	[A]	0.032 15-5PH CRES 170 KSI HEAT TREAT IS A PERMITTED ALTERNATE TO 180 KSI HEAT TREAT.
3	EXTERNAL DOUBLER	[A]	0.071 CLAD 7075-T6
4	TAPERED FILLER	2	CLAD 7075-T6 SAME THICKNESS AS THE THICKEST LOCATION

TABLE I

Leading Edge Slat Skin Splice Repair
Figure 7 (Sheet 1)

BOEING PROPRIETARY - Copyright © - Unpublished Work - See title page for details.

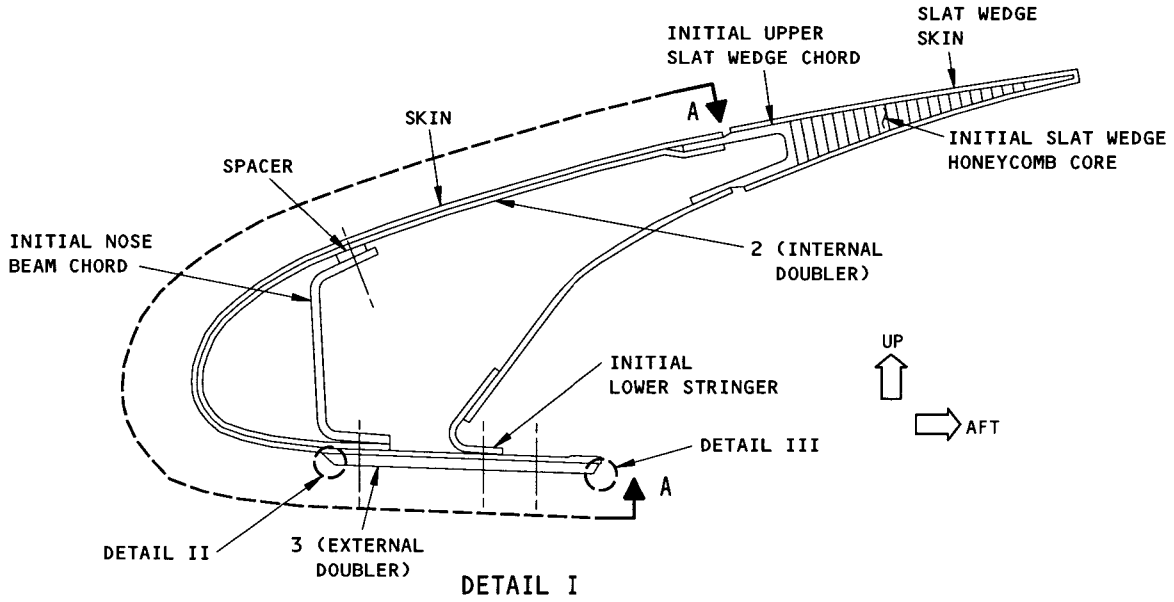

DETAIL I

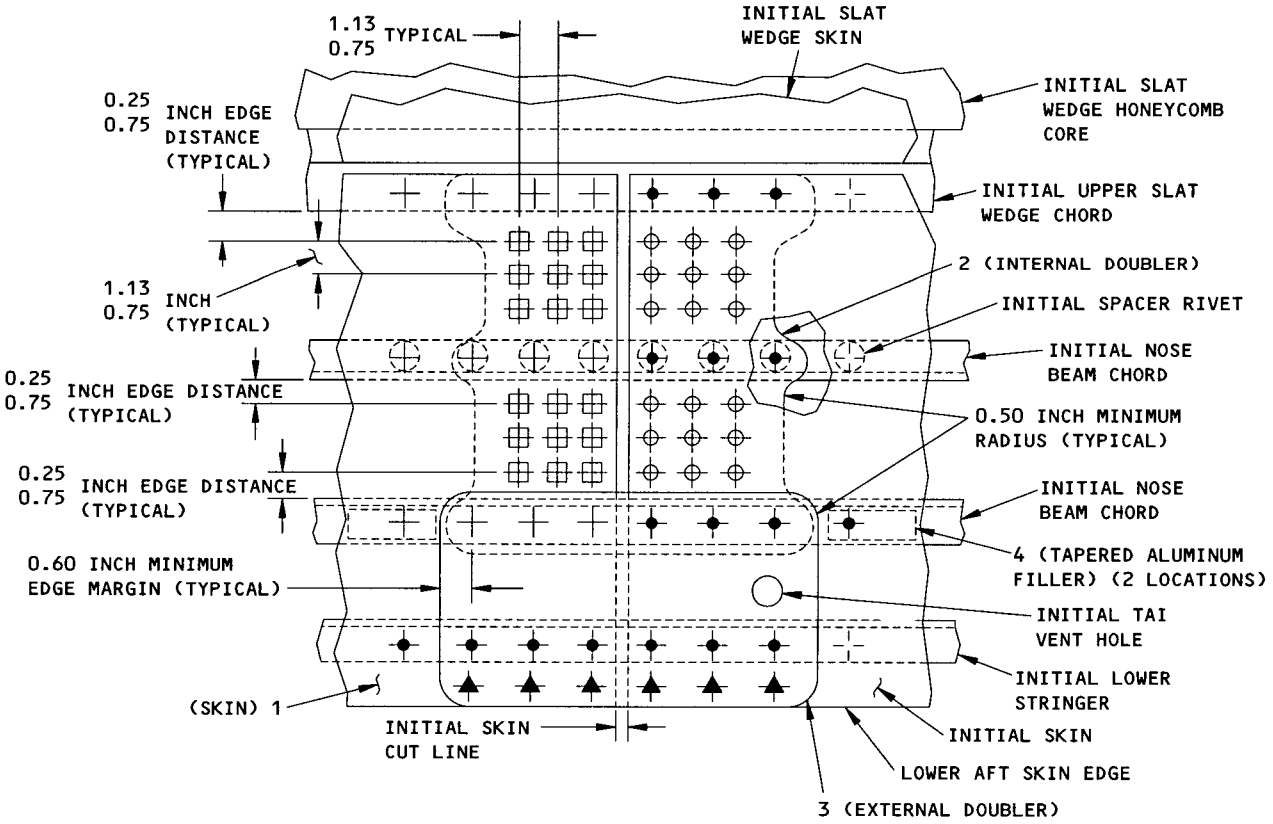

VIEW A-A
LOOKING AFT
(SKIN UNWRAPPED TO APPEAR FLAT)

Leading Edge Slat Skin Splice Repair
Figure 7 (Sheet 2)

BOEING PROPRIETARY - Copyright © - Unpublished Work - See title page for details.

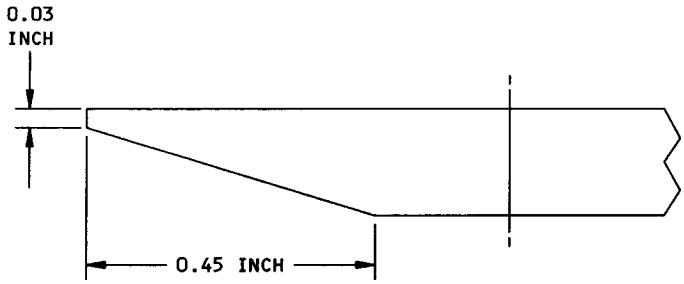

TYPICAL TAPER 3 SIDES

DETAIL II

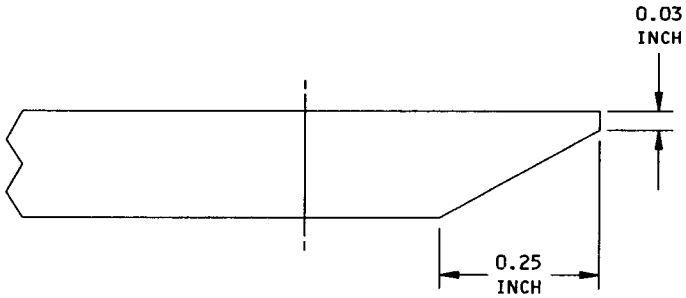

TAPER AT AFT EDGE

DETAIL III

Leading Edge Slat Skin Splice Repair
Figure 7 (Sheet 3)

APPLICABILITY
REFER TO SRM 57-50-3, FIG. 1 FOR A LEADING EDGE SLAT SKIN REPAIR AFT OF THE NOSE BEAM.

REPAIR INSTRUCTIONS

1. Carefully make the cutout as shown in Detail I or Detail II as applicable.
2. Make the repair parts given in Table I as applicable. Make the surface contour of the repair parts the same as the surface contour of the skin.
3. Assemble the repair parts. See Detail I or Detail II as applicable.
4. Drill the fastener holes.
5. Disassemble the repair parts.
6. Remove all the nicks, scratches, gouges, burrs and sharp edges from the repair parts and the skin.
7. Apply a chemical conversion coating to the repair parts and to the bare surfaces of the skin. Refer to SRM 51-10-2.
8. Apply one layer of BMS 10-79, Type II or III primer to the repair parts and to the bare surfaces of the skins. Refer to SOPM 20-44-04.
9. Install the repair parts with BMS 5-63 high temperature sealant between the faying surfaces. Refer to SRM 57-30-5.

CAUTION: BLIND FASTENERS CAN BE USED ONLY IF YOU ARE SURE THAT THEY WILL BE SEATED CORRECTLY AGAINST THE DOUBLERS OR OTHER INTERNAL STRUCTURE (IF PRESENT). KEEP SUFFICIENT FASTENER SPACING AND EDGE MARGINS.

10. Install the fasteners. Install the non-aluminum fasteners wet with BMS 5-63 sealant.
11. Apply aerodynamic smoother with BMS 5-63 sealant to the gap between the part 2 filler and the skin. Refer to SRM 51-70.
12. Apply the finish to the repair area. Refer to AMM 51-21.
13. Apply the erosion coating or tape as necessary. Refer to SRM 51-20-5.

NOTES

- THIS REPAIR WILL NOT HAVE AN EFFECT ON A STRUCTURALLY SIGNIFICANT ITEM (SSI) GIVEN IN SRM 51-00-4, FIG.3. THUS NO CHANGE TO THE SUPPLEMENTAL STRUCTURALLY INSPECTION DOCUMENT (SSID) INSPECTION PROGRAM IS NECESSARY.
- WHEN YOU USE THIS REPAIR, REFER TO:
  - AMM 51-21 FOR INTERIOR AND EXTERIOR FINISHES
  - SOPM 20-44-04 FOR APPLICATION OF CORROSION RESISTANT PRIMER
  - SRM 51-10-1 FOR INVESTIGATION AND CLEANUP OF DAMAGE
  - SRM 51-10-2 FOR PROTECTIVE TREATMENT OF METALS
  - SRM 51-20-4 FOR SEALING OF REPAIRS
  - SRM 51-20-5 FOR EROSION PROTECTION
  - SRM 51-30 FOR FASTENER CODE, REMOVAL, INSTALLATION, HOLE SIZES, EDGE MARGINS AND SUBSTITUTION
  - SRM 51-70 FOR AERODYNAMIC SMOOTHNESS
  - SRM 57-30-5 FOR LEADING EDGE SKIN REPAIR SEALING.

FASTENER SYMBOLS

REPAIR FASTENER LOCATION, INSTALL BACR15FP5E FASTENER. NAS1739E5 FASTENER IS AN ALTERNATIVE.

REPAIR FASTENER LOCATION. INSTALL A BACR15CE5D FASTENER.

REPAIR PART		QTY	MATERIAL
1	DOUBLER	2	0.071 INCH THICK CLAD 2024-0, HEAT TREAT TO -T4
2	FILLER	1	0.063 INCH THICK CLAD 2024-0, HEAT TREAT TO -T4
3	DOUBLER	1	0.071 INCH THICK CLAD 2024-0, HEAT TREAT TO -T4
4	SPLICE PLATE	2	0.071 INCH THICK CLAD 2024-0, HEAT TREAT TO -T4

TABLE I

Wing Leading Edge Slat Skin - Flush Repair Forward of the Nose Beam
Figure 8 (Sheet 1)

BOEING PROPRIETARY - Copyright © - Unpublished Work - See title page for details.

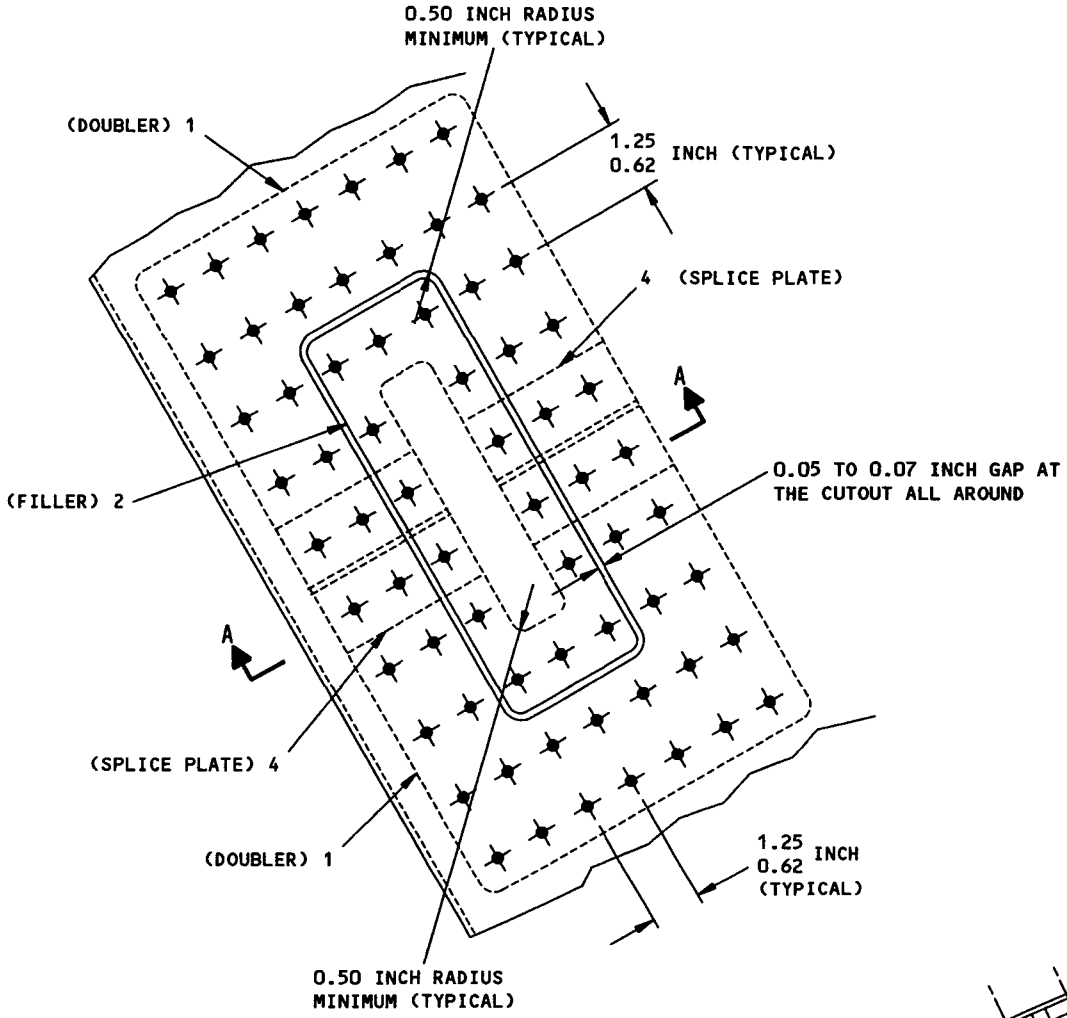

LEADING EDGE SKIN REPAIR WHERE
THERE IS ONLY EXTERNAL ACCESS

DETAIL I

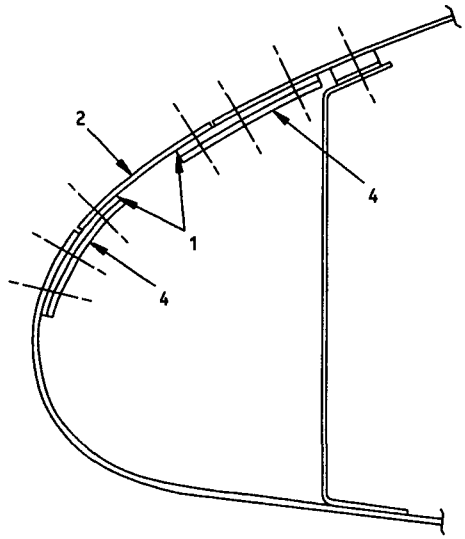

SECTION A-A

Wing Leading Edge Slat Skin - Flush Repair Forward of the Nose Beam
Figure 8 (Sheet 2)

BOEING PROPRIETARY - Copyright © - Unpublished Work - See title page for details.

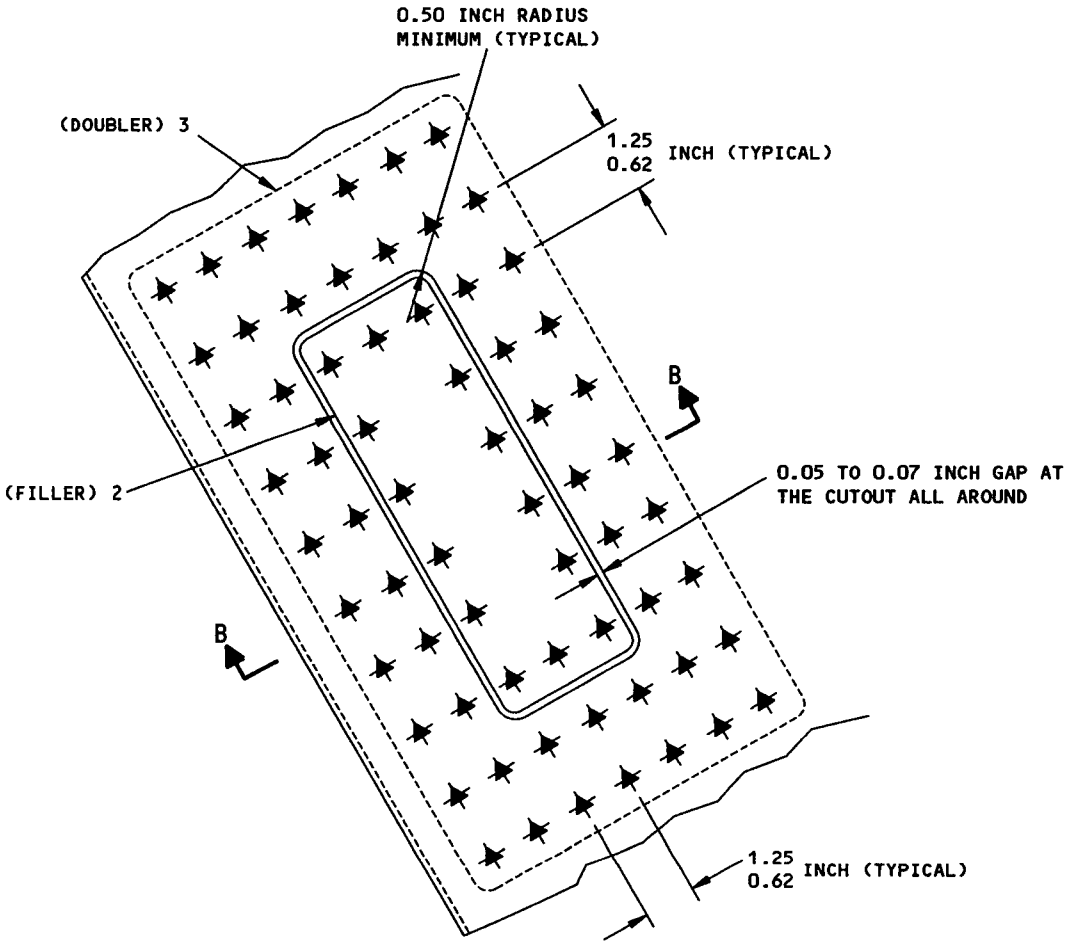

LEADING EDGE SKIN REPAIR WHERE
THERE IS SUFFICIENT INTERNAL ACCESS

DETAIL II

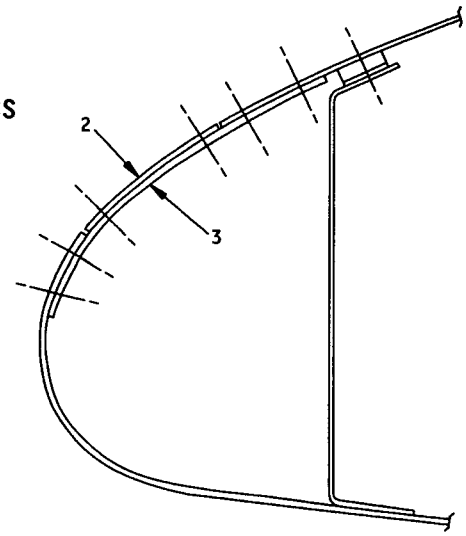

SECTION B-B

Wing Leading Edge Slat Skin - Flush Repair Forward of the Nose Beam
Figure 8 (Sheet 3)

BOEING PROPRIETARY - Copyright © - Unpublished Work - See title page for details.

STRUCTURAL REPAIR

SERVICE BULLETIN REPAIRS

The following Service Bulletins contain Wing Trailing Edge Flaps repairs which are available for use where specific damage has been encountered. Usually, the Service Bulletin also covers preventive modification data which operators are encouraged to use to eliminate the need for repair.

DAMAGED AREA	CUM LINE NUMBER EFFECTIVITY [A]	SB NUMBER
OUTBOARD MIDFLAP CARRIAGE SUPPORT FITTING INSPECTION, REPAIR AND MODIFICATION	1 THRU 598, 600 THRU 648, 650 THRU 656	737-57-1118
OUTBOARD TRAILING EDGE FLAP OUTBOARD TRACK	1 THRU 361	737-57-1084

[A] FOR AIRPLANES ON WHICH PREVENTIVE MODIFICATION HAS NOT BEEN ACCOMPLISHED

REPAIR INSTRUCTIONS

1. Locate and drill a 0.25 inch diameter stop hole through the skin at both ends of the damage. Refer to SRM 51-10-1.

   NOTE: If you make a cutout to remove the damage, make the cutout in a rectangular shape with the major axis parallel with the wing spar. Round the corners to 0.50 inch radius.

2. Make the repair part given in Table I. Make the surface contour of the repair part the same as the surface contour of the skin.
3. Assemble the repair part. See Detail I.
4. Drill the fastener holes.
5. Disassemble the repair part.
6. Remove all the nicks, scratches, gouges, burrs and sharp edges from the repair part and the skin.
7. Apply a chemical conversion coating to the repair part and to the bare surfaces of the skin. Refer to SRM 51-10-2.
8. Apply one layer of BMS 10-79, Type II or III primer to the repair part and to the bare surfaces of the skin. Refer to SOPM 20-44-04.
9. Install the repair part with BMS 5-95 sealant between the faying surfaces. Refer to SRM 51-20-4.
10. Install the fasteners. Install the non-aluminum fasteners wet with BMS 5-95 sealant.
11. Apply the finish to the repair area. Refer to AMM-51-21.

NOTES

- THIS REPAIR WILL NOT HAVE AN EFFECT ON A STRUCTURALLY SIGNIFICANT ITEM (SSI) GIVEN IN SRM 51-00-4, FIG.3. THUS, NO CHANGE TO THE SUPPLEMENTAL STRUCTURAL INSPECTION DOCUMENT (SSID) INSPECTION PROGRAM IS NECESSARY.
- CHECK FOR CLEARANCE WITH ADJACENT STRUCTURE WHEN FLAP IS RETRACTED.
- WHEN YOU USE THIS REPAIR, REFER TO:
  - AMM 51-21 FOR INTERIOR AND EXTERIOR FINISHES
  - SOPM 20-44-04 FOR APPLICATION OF CORROSION RESISTANT PRIMER
  - SRM 51-10-1 FOR INVESTIGATION AND CLEANUP OF DAMAGE AND STOP DRILLING
  - SRM 51-10-2 FOR PROTECTIVE TREATMENT OF METALS
  - SRM 51-20-4 FOR SEALING OF REPAIRS
  - SRM 51-30 FOR FASTENER CODE, REMOVAL, INSTALLATION, HOLE SIZES, EDGE MARGINS AND SUBSTITUTION
  - SRM 51-70 FOR AERODYNAMIC SMOOTHNESS.

[A] USE ONE GAGE THICKER THAN THE INITIAL SKIN.

FASTENER SYMBOLS

REPAIR FASTENER LOCATION, INSTALL A BACR15FP5E FASTENER. NAS1739E5 AND NAS1399D5 FASTENERS ARE ALTERNATIVES.

REPAIR MATERIAL			
REPAIR PART		QTY	MATERIAL
1	PLATE	1	CLAD 2024-T3 [A]

TABLE I

Wing Inboard and Outboard Trailing Edge
Fore Flap Leading Edge Skin - External Repair
Figure 1 (Sheet 1)

BOEING PROPRIETARY - Copyright © - Unpublished Work - See title page for details.

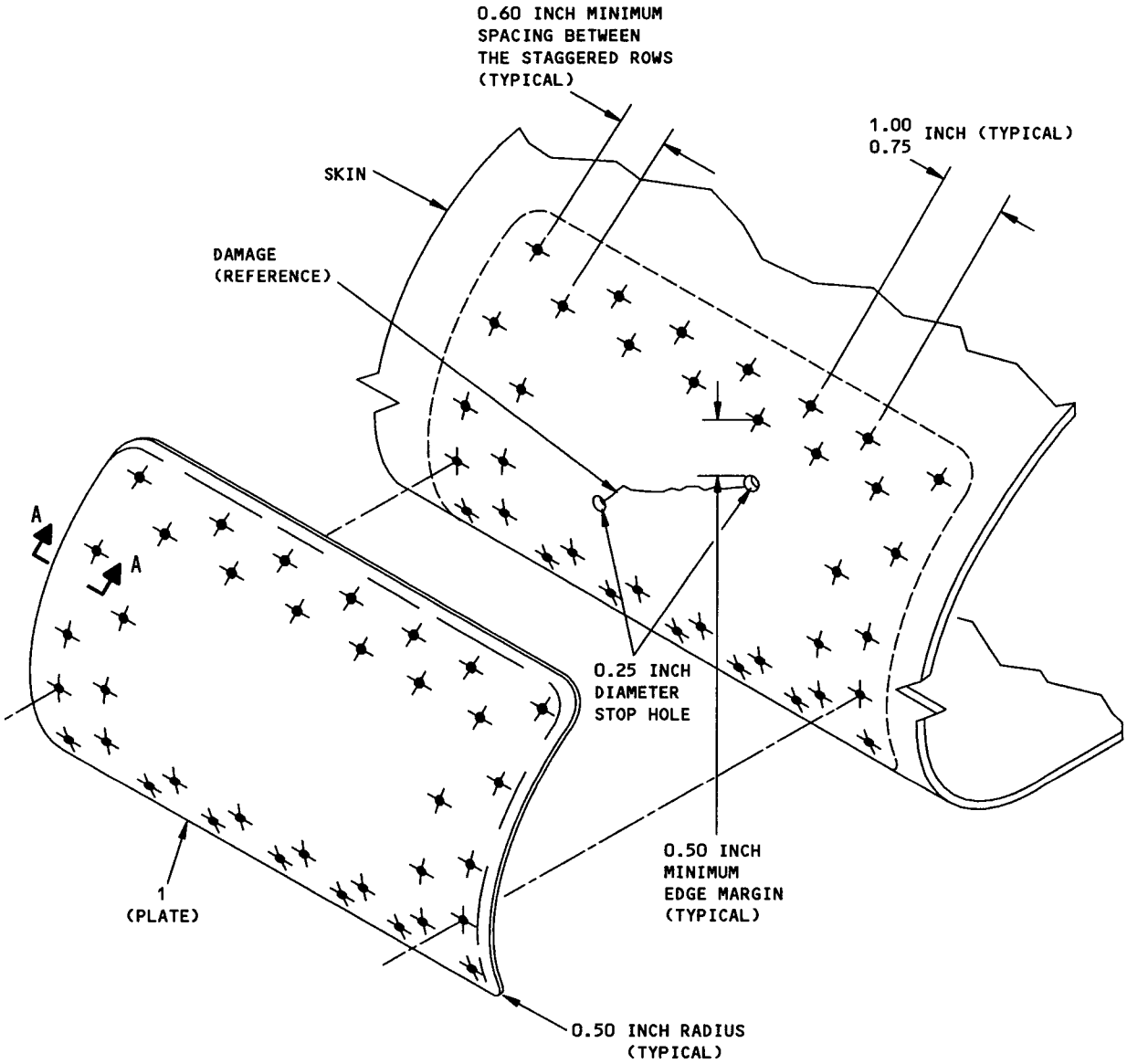

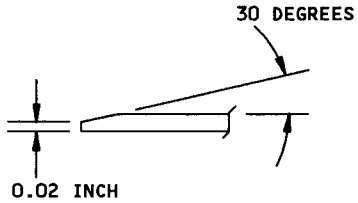

TYPICAL TO ALL EDGES
SECTION A-A

Wing Inboard and Outboard Trailing Edge
Fore Flap Leading Edge Skin - External Repair
Figure 1 (Sheet 2)

BOEING PROPRIETARY - Copyright © - Unpublished Work - See title page for details.

REPAIR INSTRUCTIONS

1. Disassemble damaged skin panel from the underside of the mid flap.
2. Trim out damaged skin. Allow edge margin for existing fasteners.
3. Fabricate part [1]
4. Lay out, drill, and countersink fastener holes as required. Holes in part [1] must match existing fastener holes.
5. Drill repair fastener holes in skin to match part [1]
6. Brush alodize all reworked areas of skin and part [1] per 51-10-2.
7. Fabricate and install repair washers in countersunk screw holes and original fastener holes in the skin per 51-30-8, Fig. 4.
8. Complete the requirements for bonding part [1] to skin per 51-40-5, par. 2.
9. Install parts [1]
10. Assemble skin to flap.
11. Restore finish per 51-21 of the Maintenance Manual.

NOTES

- REMOVE ALL BURRS, NICKS, AND SCRATCHES.
- BREAK 0.03 ALL SHARP EDGES OF REWORKED ORIGINAL PARTS AND REPAIR PARTS.
- REFER 51-30 FOR FASTENER CODE, REMOVAL AND INSTALLATION, HOLE SIZES AND EDGE MARGINS.
- REFER 51-10-2 FOR METAL PROTECTIVE TREATMENT.
- COMPLETE THE REQUIREMENTS FOR BONDING PER 51-40-5, PAR. 2.
- THE FATIGUE LIFE OF THE MID FLAP WILL BE REDUCED BY THIS REPAIR.
- FOR REQUIRED PERFORMANCE CONSIDERATIONS IN REGIONS OF CRITICAL SMOOTHNESS, REFER 51-70.
- MINIMUM NUMBER OF FASTENERS ON EACH SIDE OF DAMAGE IS AS SHOWN.

+ ORIGINAL FASTENER LOCATION.

✦ REPAIR FASTENER LOCATION FOR BACR15CE6D FASTENERS.

REPAIR MATERIAL			
PART		QTY	MATERIAL
[1]	PLATE	1	0.14 CLAD 2024 HT-T4

Trailing Edge Mid Flap Repair - Lower Skin
Figure 2 (Sheet 1)

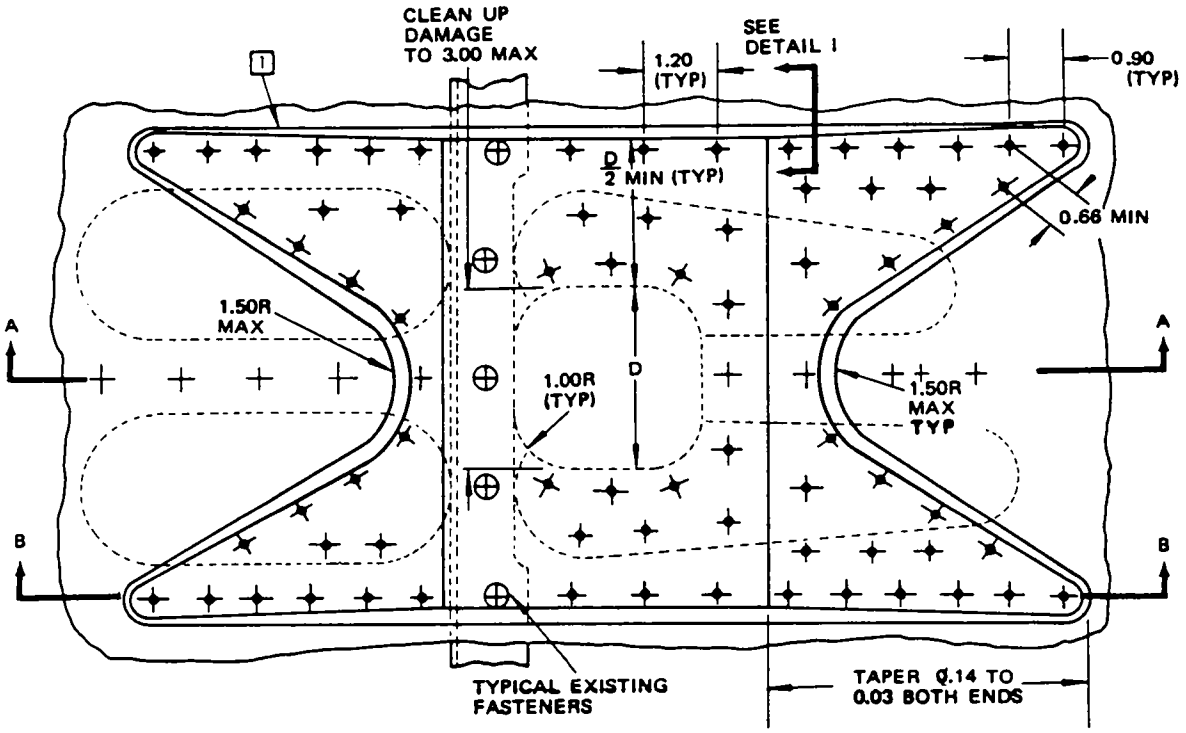

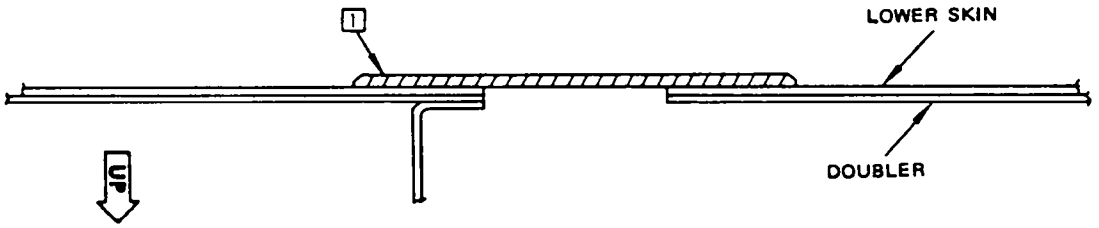

A–A

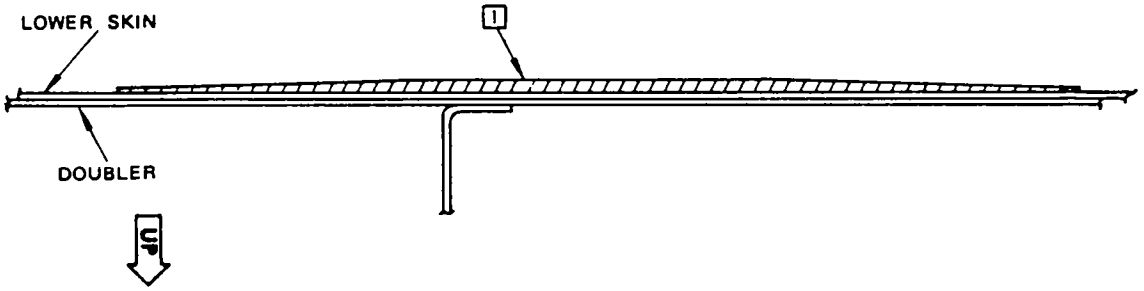

B–B

Trailing Edge Mid Flap Repair - Lower Skin
Figure 2 (Sheet 2)

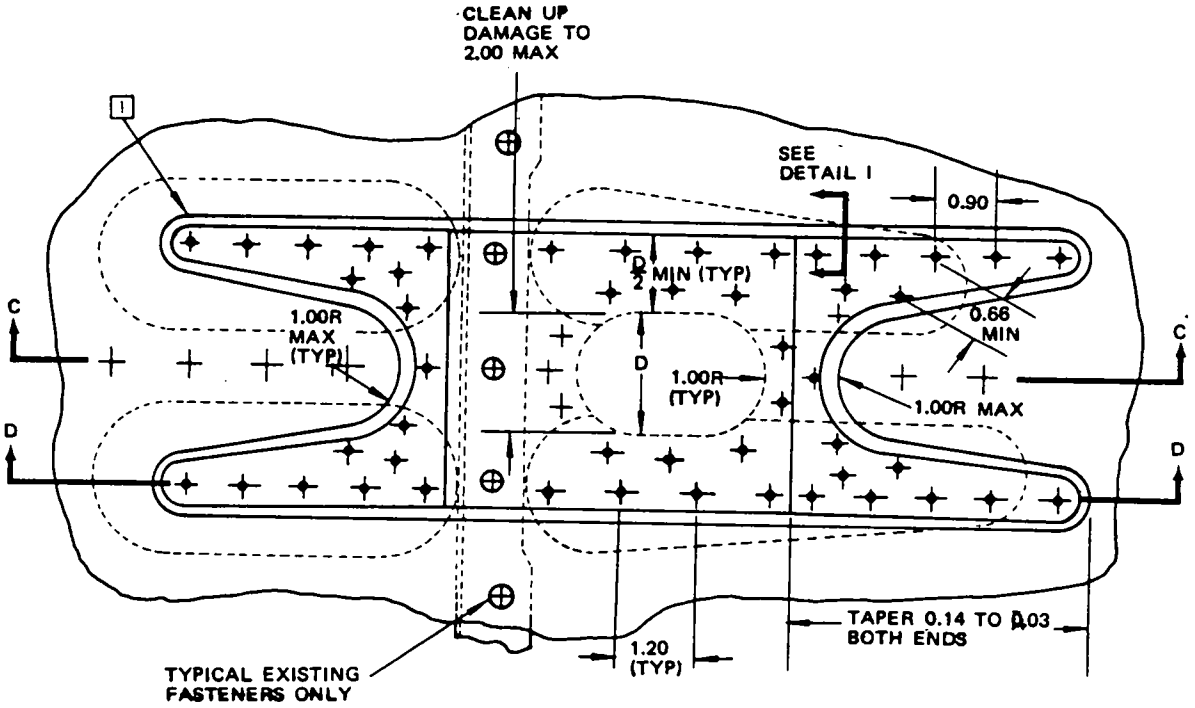

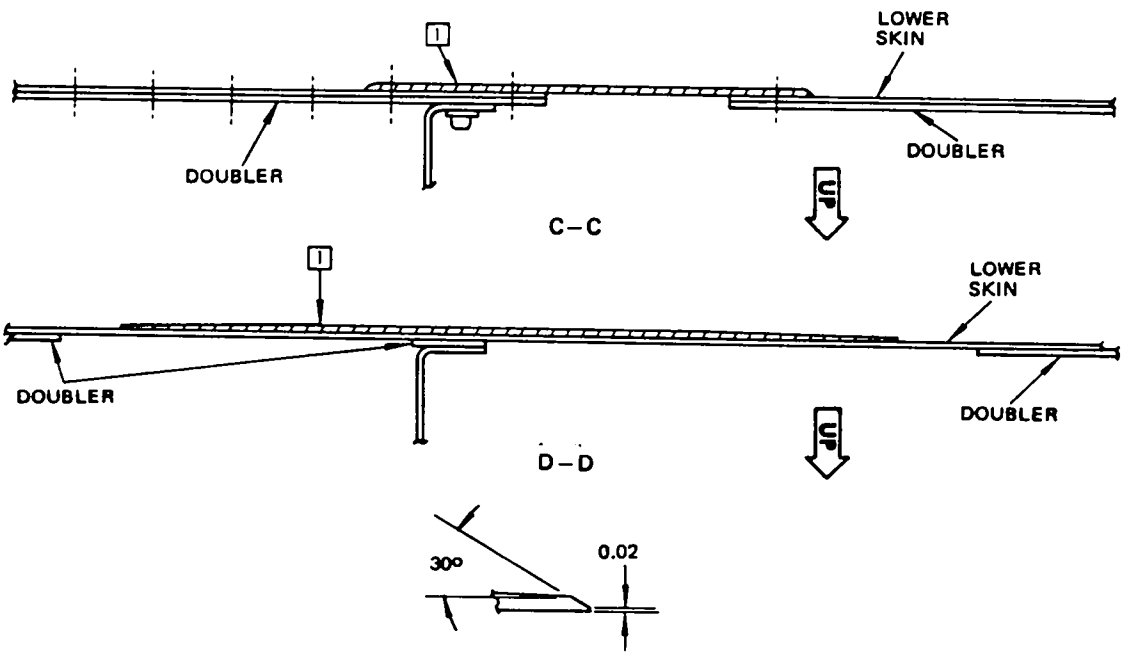

TYPICAL CHAMFER ALL AROUND
DETAIL I (ROTATED 90° CW)

Trailing Edge Mid Flap Repair - Lower Skin
Figure 2 (Sheet 3)

REPAIR INSTRUCTIONS

1. Cut and remove the damaged area of skin. The skin is bonded to the spar chords. Take care not to damage the lower chord when removing the skin.
2. Make the repair parts.
3. Assemble the repair parts and drill the fastener holes. Repair parts [2] and [4] will have to be sprung slightly to permit insertion unless the alternative repair is being used.
4. Remove repair parts.
5. Prepare the repair parts and the faying surfaces of the original skin and spar chord for stuctural bonding.
6. Install the repair parts with structural bonding adhesive. Install the fasteners within the pot life of the adhesive.
7. Restore the finish.

NOTES

- THIS REPAIR WILL NOT HAVE AN EFFECT ON A STRUCTURALLY SIGNIFICANT ITEM (SSI) GIVEN IN SRM 51-00-4, FIG.3. THUS NO CHANGE TO THE SUPPLEMENTAL STRUCTURAL INSPECTION DOCUMENT (SSID) INSPECTION PROGRAM IS NECESSARY.
- REFER TO THE FOLLOWING WHEN USING THIS REPAIR:
  - AMM 51-21 OF THE 737 MAINTENANCE MANUAL FOR INTERIOR AND EXTERIOR FINSISHES.
  - SRM 51-10-2 FOR PROTECTIVE TREATMENT OF METAL.
  - SRM 51-30 FOR FASTENER CODE, REMOVAL, INSTALLATION, HOLE SIZES AND EDGE MARGINS.
  - SRM 51-40-5 FOR STRUCTURAL BONDING.
  - SRM 51-70 FOR AERODYNAMIC SMOOTHNESS REQUIREMENTS.
- BREAK SHARP EDGES OF ORIGINAL AND REPAIR PARTS .015 INCH TO .030 INCH.
- REMOVE ALL NICKS, SCRATCHES, BURRS, SHARP EDGES AND CORNERS FROM ORIGINAL AND REPAIR PARTS.

[A] MATERIAL SAME AS EXISTING SKIN, GAGE EQUIVALENT TO COMBINED THICKNESS OF BONDED SKINS.

[B] SAME MATERIAL ONE GAGE HEAVIER THAN [1].

[C] THICKNESS AS REQUIRED.

[D] ONLY REQUIRED WHERE THE ALTERNATIVE REPAIR IS USED.

FASTENER SYMBOLS

+ INITIAL FASTENER LOCATION. INSTALL A BACR15FP6E FASTENER. NAS1739E6 AND BACR15EB6 ARE ALTERNATIVE FASTENERS

⊕ REPAIR FASTENER LOCATION. INSTALL A BACR15FP6E FASTENER. NAS1739E6 AND BACR15EB6 ARE ALTERNATIVE FASTENERS

REPAIR MATERIAL			
REPAIR PART		QTY	MATERIAL
[1]	FILLER	1	[A]
[2]	PLATE	1	[B]
[3]	PLATE	1	[B]
[4]	PLATE	1	[B]
[5]	PLATE	2	[B] [D]
[6]	SHIM	2	2024-0 [C] [D]

Trailing Edge Mid Flap Leading Edge Skin Repair
Figure 3 (Sheet 1)

BOEING PROPRIETARY - Copyright © - Unpublished Work - See title page for details.

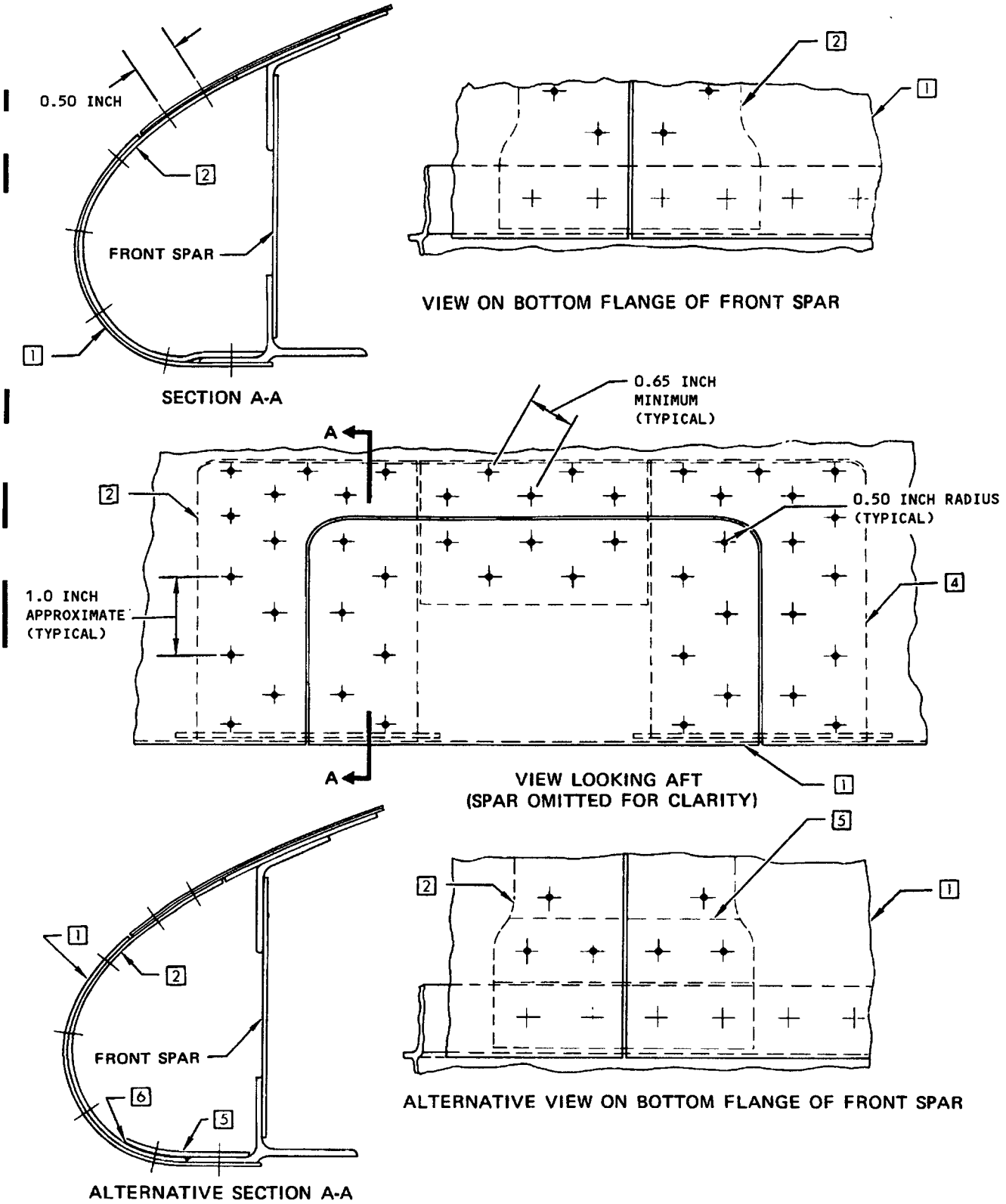

Trailing Edge Mid Flap Leading Edge Skin Repair
Figure 3 (Sheet 2)

BOEING PROPRIETARY - Copyright © - Unpublished Work - See title page for details.

REPAIR INSTRUCTIONS

CAUTION: DO NOT DAMAGE THE STRUCTURE WHEN YOU SEPARATE THE PARTS.

1. Carefully make the cutout as shown in Detail I and remove the damaged portion of skin and bonded doubler assembly in a rectangular shape with one axis parallel to flap spar. Remove opposite skin for access.
2. Make the repair parts given in Table I.

   NOTE: The replacement skin assembly will consist of skin and doublers which are bonded together. It can be cut from a new skin assembly or the parts can be made from sheet and bonded together as given in SRM 51-40-5.
3. Assemble the repair parts.
4. Drill the fastener holes. Refer to Detail I.
5. Disassemble the repair parts.
6. Remove all nicks, scratches, burrs, sharp edges and corners from the initial and repair parts.
7. Apply a protective chemical conversion coating to the repair parts and the cut edges of the initial parts. Refer to SRM 51-10-2.
8. Apply one coat of BMS 10-79, Type II or III primer to repair parts and the cut edges of the initial parts. Refer to SOPM 20-44-04.
9. Install the repair parts with BMS 5-95 sealant between the mating surfaces. Refer to SRM 51-20-4.
10. Install fasteners. Install the non-aluminum fasteners wet with BMS 5-95.
11. Apply BMS 5-95 sealant to the gap between the initial skin and repair part 1. Refer to SRM 51-70.
12. Apply the finish to the repair area. Refer to AMM 51-21.

NOTES

- THIS REPAIR WILL NOT HAVE AN EFFECT ON THE STRUCTURALLY SIGNIFICANT ITEMS (SSI'S) GIVEN IN SRM 51-00-4, FIG.3. THUS NO CHANGE TO THE SUPPLEMENTAL STRUCTURALLY INSPECTION DOCUMENT (SSID) INSPECTION PROGRAM IS NECESSARY.
- WHEN YOU USE THIS REPAIR, REFER TO:
  - AMM 51-21 FOR INTERIOR AND EXTERIOR FINISHES
  - SOPM 20-44-04 FOR APPLICATION OF CORROSION RESISTANT PRIMER
  - SRM 51-10-1 FOR INVESTIGATION AND CLEANUP OF DAMAGE AND DRILLNG
  - SRM 51-10-2 FOR PROTECTIVE TREATMENT OF METALS
  - SRM 51-30 FOR FASTENER CODE, REMOVAL, INSTALLATION, HOLE SIZES, EDGE MARGINS AND SUBSTITUTION
  - SRM 51-70 FOR AERODYNAMIC SMOOTHNESS.

[A] USE THE SAME MATERIAL, HEAT TREAT AND GAGE AS THE INITIAL SKIN AND DOUBLER ASSEMBLY.

[B] USE THE SAME MATERIAL AND HEAT TREAT AS THE INITIAL SKIN, BUT USE A GAGE THAT IS EQUAL TO THE TOTAL THICKNESS OF THE INITIAL SKIN AND DOUBLERS.

[C] USE A GAGE THAT IS EQUAL TO THE TOTAL THICKNESS OF THE SKIN DOUBLERS.

[D] USE A GAGE THAT IS EQUAL TO DIFFERENCE IN THICKNESS BETWEEN THE REPAIR PART 2 AND SPAR CHORD.

FASTENER SYMBOLS

+ INITIAL FASTENER LOCATION. REPLACE THE INITIAL FASTENER WITH A FASTENER OF THE SAME TYPE BUT USE A 1/64-SIZE OR 1/32-SIZE OVERSIZE FASTENER. AN OVERSIZE SHEAR TYPE FLUSH HEAD HEX-DRIVE FASTENER CAN BE USED AS AN ALTERNATIVE.

◆ REPAIR FASTENER LOCATION. INSTALL A BACR15CE5D FASTENER. A 5/32-INCH DIAMETER SHEAR FLUSH HEAD HEX-DRIVE FASTENER CAN BE USED AS AN ALTERNATIVE.

REPAIR MATERIAL			
REPAIR PART		QTY	MATERIAL
1	REPLACEMENT SKIN ASSEMBLY	1	[A]
2	PLATE	1	[B]
3	DOUBLER	1	[B]
4	DOUBLER	1	[B]
5	FILLER	1	CLAD 2024-T3 [C]
6	FILLER	1	CLAD 2024-T3 [D]
7	FILLER	1	CLAD 2024-T3 [D]

TABLE I

Wing Inboard Trailing Edge Mid Flap Bonded Upper Skin and Doubler Repair
Figure 4 (Sheet 1)

BOEING PROPRIETARY - Copyright © - Unpublished Work - See title page for details.

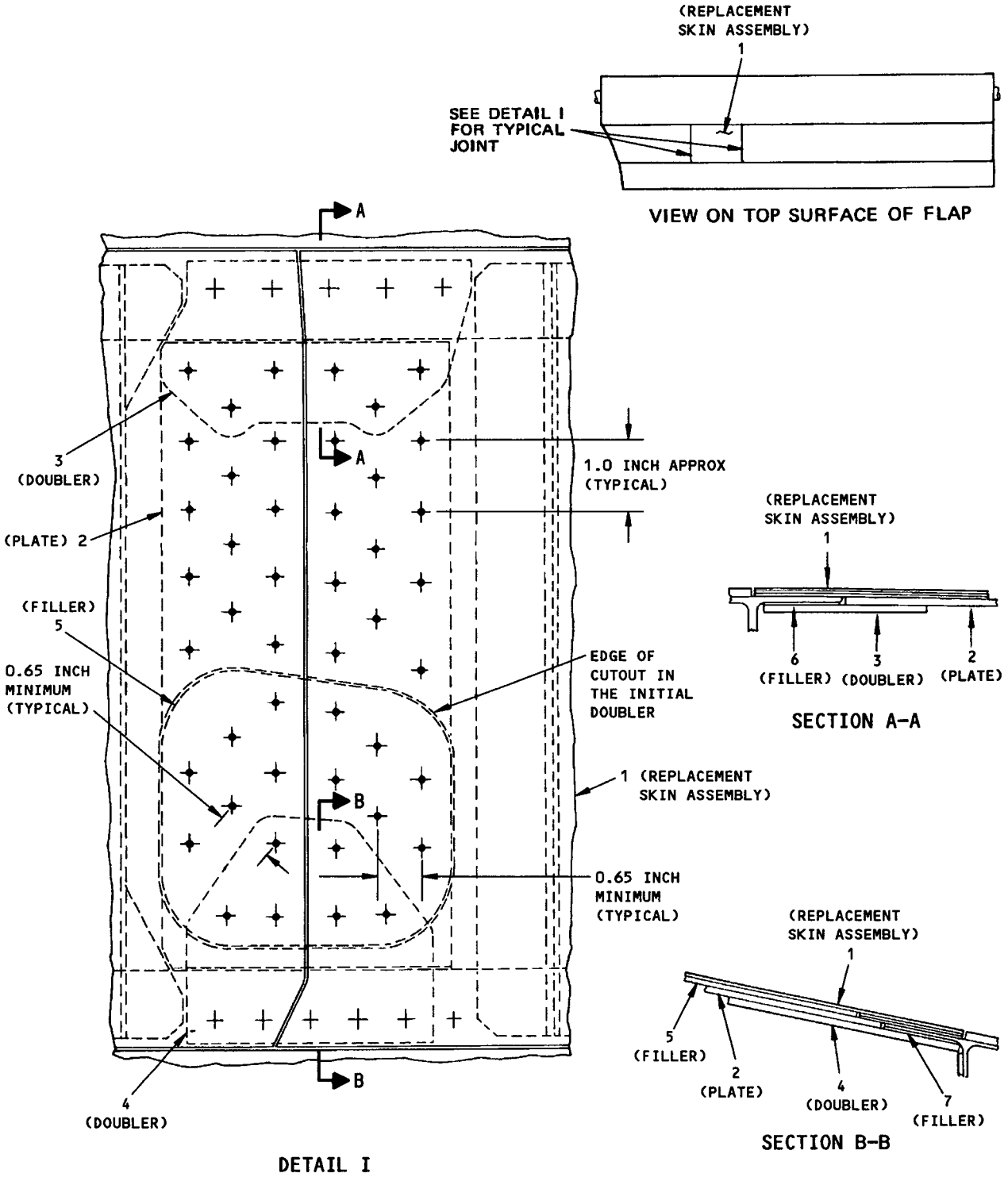

Wing Inboard Trailing Edge Mid Flap Bonded Upper Skin and Doubler Repair
Figure 4 (Sheet 2)

BOEING PROPRIETARY - Copyright © - Unpublished Work - See title page for details.

REPAIR INSTRUCTIONS

CAUTION: THE SKIN IS BONDED TO THE SPAR CHORDS. TAKE CARE NOT TO DAMAGE THE CHORDS WHEN YOU REMOVE THE SKIN.

1. Carefully cut out and remove the damaged area of skin as shown in Detail I.
2. Make the repair parts given in Table I and shown in Detail I. Make the surface contour of the repair parts the same as the surface contour of the initial skin.
3. Assemble the repair parts.
4. Drill the fastener holes.
5. Disassemble the repair parts.
6. Remove all nicks, scratches, burrs, sharp edges and corners from the initial parts.
7. Apply a protective chemical conversion coating to the repair parts and the cut edges of the initial parts. Refer to SRM 51-10-2.
8. Apply one coat of BMS 10-79, Type II or III primer to repair parts and the cut edges of the initial parts. Refer to SOPM 20-44-04.
9. Install the repair parts with BMS 5-95 sealant between the mating surfaces. Refer to SRM 51-20-4.
10. Install the fasteners. Install the non-aluminum fasteners wet with BMS 5-95 sealant.
11. Apply BMS 5-95 sealant to the gap between the initial skin and the repair parts. Refer to SRM 51-70.
12. Apply the finish to the repair area. Refer to AMM 51-21.

NOTES

- THIS REPAIR WILL NOT HAVE AN EFFECT ON A STRUCTURALLY SIGNIFICANT ITEM (SSI) GIVEN IN SRM 51-00-4, FIG.3. THUS, NO CHANGE TO THE SUPPLEMENTAL STRUCTURAL INSPECTION DOCUMENT (SSID) INSPECTION PROGRAM IS NECESSARY.
- WHEN YOU USE THIS REPAIR, REFER TO:
  - AMM 51-21 FOR INTERIOR AND EXTERIOR FINISHES
  - SOPM 20-44-04 FOR APPLICATION OF CORROSION RESISTANT PRIMER
  - SRM 51-10-1 FOR INVESTIGATION AND CLEANUP OF DAMAGE
  - SRM 51-10-2 FOR PROTECTIVE TREATMENT OF METALS
  - SRM 51-20-4 FOR SEALING OF REPAIRS
  - SRM 51-30 FOR FASTENER CODE, REMOVAL, INSTALLATION, HOLE SIZES, EDGE MARGINS AND SUBSTITUTION
  - SRM 51-70 FOR AERODYNAMIC SMOOTHNESS.

[A] ONE GAGE THICKER THAN THE GAGE EQUIVALENT TO COMBINED THICKNESS OF EXISTING BONDED SKINS.

FASTENER SYMBOLS

- REFERENCE FASTENER LOCATION
- INITIAL FASTENER LOCATION. INSTALL A BACR15FP6E FASTENER.
- REPAIR FASTENER LOCATION. INSTALL A BACR15FP5E FASTENER. NAS1739E5 AND NAS1399D5 FASTENERS ARE ALTERNATIVES.
- REPAIR FASTENER LOCATION. INSTALL A BACR15CE5D FASTENER. A 5/32 INCH DIAMETER SHEAR TYPE FLUSH HEAD HEX-DRIVE BOLT IS AN ALTERNATIVE.
- INITIAL FASTENER LOCATION. INSTALL A BACR15CE6D FASTENER. A 3/16 INCH DIAMETER SHEAR TYPE FLUSH HEAD HEX-DRIVE BOLT IS AN ALTERNATIVE.

REPAIR MATERIAL			
REPAIR PART		QTY	MATERIAL
1	REPAIR SKIN	1	CLAD 2024-T3 [A]
2	SPLICE PLATE	2	CLAD 2024-T3 [A]

TABLE I

Wing Inboard and Outboard Trailing Edge Aft Flap Leading Edge Skin Repair
Figure 5 (Sheet 1)

BOEING PROPRIETARY - Copyright © - Unpublished Work - See title page for details.

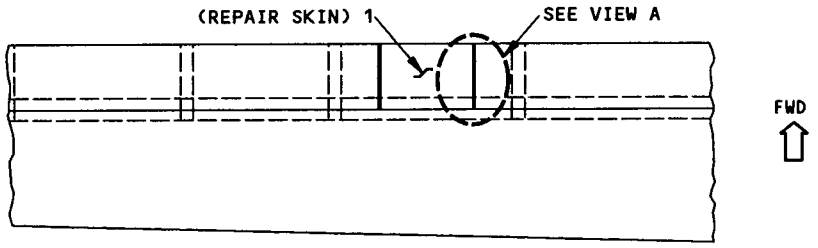

VIEW ON TOP SURFACE OF FLAP
DETAIL I

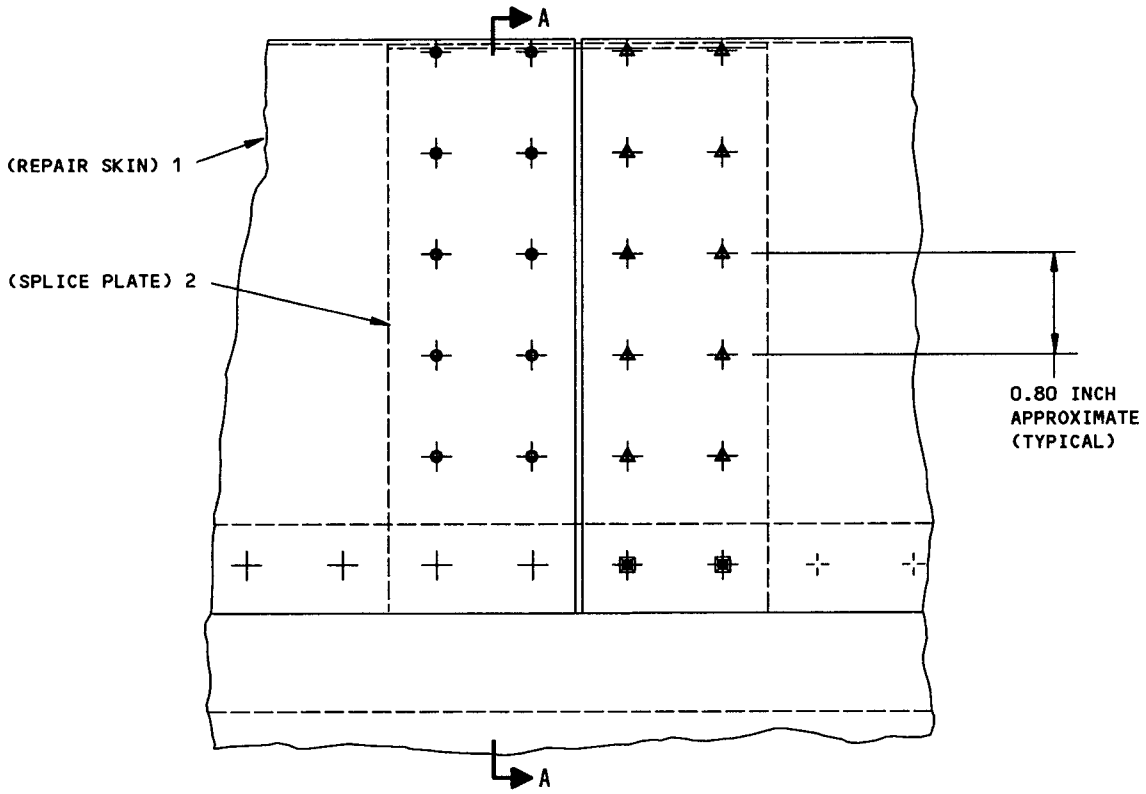

VIEW A

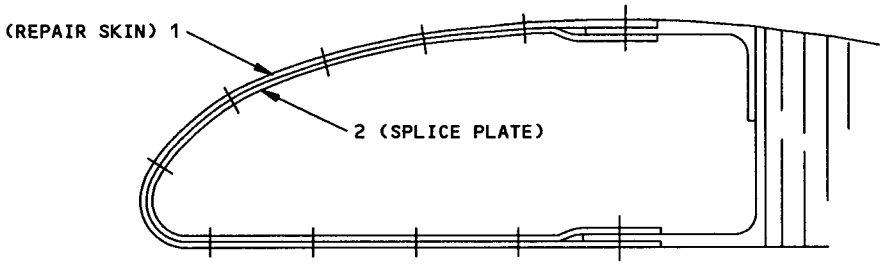

SECTION A-A

Wing Inboard and Outboard Trailing Edge Aft Flap Leading Edge Skin Repair
Figure 5 (Sheet 2)

BOEING PROPRIETARY - Copyright © - Unpublished Work - See title page for details.

APPLICABILITY
THIS REPAIR IS APPLICABLE TO DENTS ADJACENT TO THE REAR SPAR. THE DENT MUST NOT BE LARGER THAN 1.0 INCH IN DIAMETER. IF THE DENT IS LARGER THAN 1.0 INCH IN DIAMETER, TELL THE BOEING COMPANY.

REPAIR INSTRUCTIONS

1. Clean the damaged area. Refer to SRM 51-40-6, par. 11. A.
2. Use the eddy current procedure to examine the damaged area for cracks. Refer to NDT Part 6, 51-00-01.
3. Make an inspection of the damaged area for delaminations. Refer to SRM 51-40-6, par. 2. A.

   NOTE: If there are skin cracks, a dent with cracks, or delamination, you cannot use this repair. Cut out the dent and cracks and repair the damage as given in SRM 51-40-6, par. 11. C. Repair the delamination as given in SRM 51-40-6, par. 11.
4. Fill the dent with BMS 5-28, Type 6 potting compound.
5. Clean the repair area around the dent. Refer to SRM 51-40-6, par. 11. D.
6. Apply a chemical conversion coating to:
   - A surface that does not have primer applied
   - A surface that does have primer applied and is damaged, or has a hole in it.

CAUTION: DO NOT USE CLAD 7075 DOUBLERS OR REPAIR PARTS FOR BONDED METAL REPAIR. DO NOT DO A BONDED METAL REPAIR ON ANY CLAD 7075 SURFACE UNLESS THE CLADDING IS REMOVED IN THE REPAIR AREA. CORROSION CAN OCCUR AT THE BOND INTERFACE. CLAD 7075 PARTS THAT ARE CLAD ON ONE SIDE ONLY CAN BE USED IF THE CLAD SIDE IS NOT A BOND INTERFACE SURFACE. ALL CLAD MATERIALS OTHER THAN 7075 ARE SATISFACTORY FOR USE IN BONDED METAL REPAIR.

7. Make the repair parts. See Table I.
8. Remove the nicks, scratches, gouges, burrs and sharp edges from the repair parts and the initial parts.
9. Clean the repair parts. Refer to SRM 51-40-6, par. 11. D.
10. Apply adhesive primer to the repair parts and the bare surfaces of the initial parts. Refer to SRM 51-40-6, par. 11. E.
11. Apply adhesive film to the part 1 doubler. Refer to SRM 51-40-6, par. 11. F.
12. Hold the repair parts in position with polyester tape to prevent movement of the repair parts during the cure cycle. Refer to SRM 51-40-6, Fig. 12.
13. Apply polyester tape to the skin panel around the repair parts so that unwanted adhesive does not collect. Refer to SRM 51-40-6, Fig. 12.
14. Apply pressure to the repair. Refer to SRM 51-40-6, par. 11. G.
15. Cure the repair. Refer to SRM 51-40-6, par. 11. H.
16. Apply a seal and the finish to the repair. Refer to SRM 51-40-6, par. 11. I.
17. Do an inspection of the repair.
    A. Do a visual inspection of the area around the edge of the doubler. Make sure there is a bead of adhesive that has cured all around the edge of the doubler. If there is an area around the edge of the doubler that does not have a bead of adhesive, the repair is not satisfactory. Remove the repair and do the repair again.
    B. Look at the position of the doubler. The maximum permitted change of position of the doubler is 0.060 inch.
    C. Do an inspection of the repair. Look for voids or bond defects. Use instrumented nondestructive inspection (NDI) procedures as given in NDT, Part 4, 51-00-01. If the inspection shows a defect in the repair, remove and install the repair again.

       NOTE: If NDI equipment is not available, use the tap test procedure. Hit the damaged area lightly with a solid metal disk. An area with a void or a bond defect will have a dull sound when you hit it lightly. An area with no defects will have a sharp sound.

Wing Inboard Midflap Trailing Edge Wedge Repair
Figure 6 (Sheet 1)

NOTES

- THIS REPAIR WILL NOT HAVE AN EFFECT ON A STRUCTURAL SIGNIFICANT ITEM (SSI) GIVEN IN SRM 51-00-4, FIG. 3. THUS NO CHANGE TO THE SUPPLEMENTAL STRUCTURAL INSPECTION DOCUMENT (SSID) INSPECTION PROGRAM IS NECESSARY.
- WHEN YOU USE THIS REPAIR REFER TO:
  - NDT PART 6, 51-00-02 FOR HIGH FREQUENCY EDDY CURRENT INSPECTION PROCEDURES
  - SRM 51-10-1 FOR INVESTIGATION AND CLEANUP OF DAMAGE
  - SRM 51-10-2 FOR PROTECTIVE TREATMENT OF METALLIC AND GRAPHITE MATERIALS
  - SRM 51-20-4 FOR REPAIR SEALING
  - SRM 51-40-6 FOR ALUMINUM HONEYCOMB STRUCTURE REPAIRS
  - SRM 71-70 FOR AERODYNAMIC SMOOTHNESS.

[A] THE TOTAL THICKNESS OF ALL STRUCTURAL SHIMS MUST BE THE SAME THICKNESS AS THE REAR SPAR CHORD FLANGE ± 0.005 INCH.

REPAIR MATERIAL			
PART		QTY	MATERIAL
1	DOUBLER	1	0.016 INCH THICK CLAD 2024-T3
2	SHIM	1	CLAD 2024-T3 [A]
3	SHIM	1	CLAD 2024-T3 [A]

TABLE I

Wing Inboard Midflap Trailing Edge Wedge Repair
Figure 6 (Sheet 2)

BOEING PROPRIETARY - Copyright © - Unpublished Work - See title page for details.

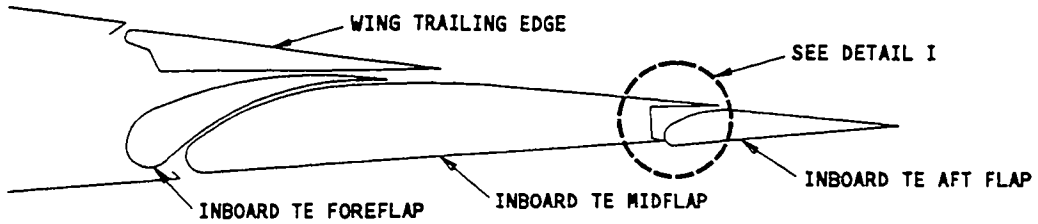

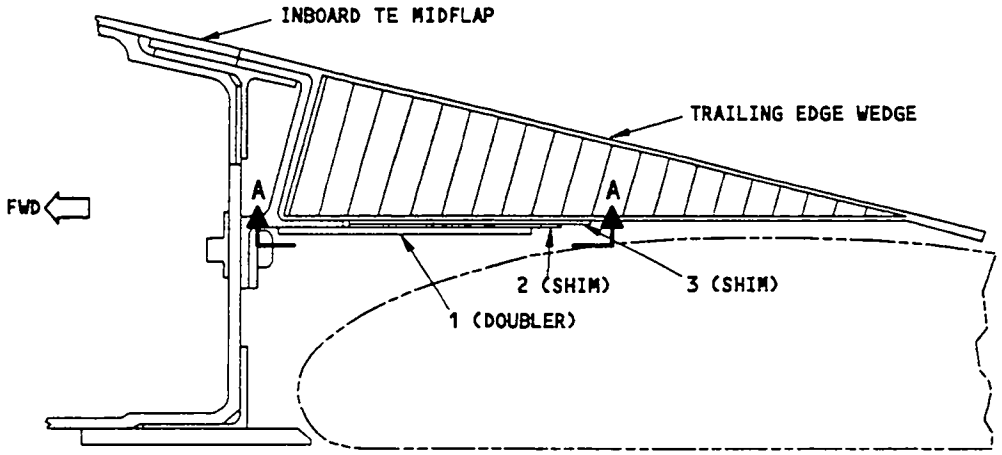

DETAIL I

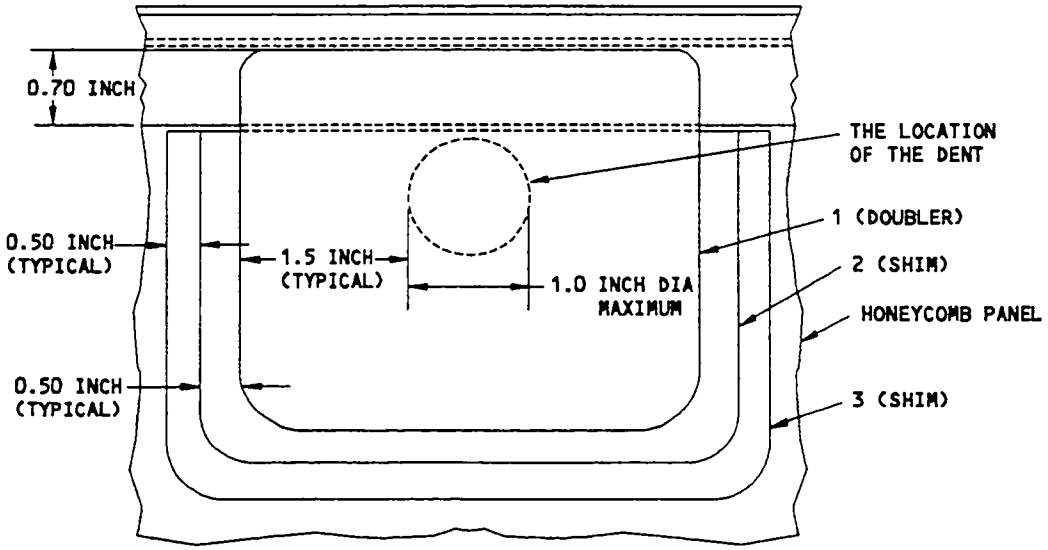

SECTION A-A

Wing Inboard Midflap Trailing Edge Wedge Repair
Figure 6 (Sheet 3)

E35963

APPLICABILITY

THIS REPAIR IS FOR DAMAGE TO THE LEADING EDGE SKIN OF THE TRAILING EDGE OUTBOARD MIDFLAP

- USE THIS REPAIR IF:
  - -DAMAGE DEPTH IS MORE THAN 35% OF THE LOCAL SKIN THICKNESS
  - -DAMAGE IS NO MORE THAN 15 INCHES FROM THE OUTBOARD OR INBOARD END OF THE MIDFLAP
- CONTACT BOEING FOR DAMAGE THAT IS MORE THAN THE ABOVE LIMITS

REPAIR INSTRUCTIONS

WARNING: FAILURE TO DEACTIVATE THE TRAILING EDGE FLAPS ALLOWS INADVERTANT OPERATION OF THE FLAPS WHICH MAY CAUSE INJURY TO PERSONNEL.

1. Extend the trailing edge flaps. Deactivate the trailing edge flap system. Refer to AMM 27-51-00.
2. Remove the damaged area of skin. Make the corner radius of the cutout 0.50 inch minimum.
3. Make the repair parts. Refer to Detail II and Table I. Form the repair parts to the contour of the skin.
4. Assemble the repair parts and drill the fastener holes.
5. Disassemble the repair parts.
6. Remove nicks, scratches, gouges, burrs, and sharp edges from the repair parts and the midflap skin.
7. Cadmium plate the Part 1 Doubler. Refer to SOPM 20-42-01.
8. Apply a chemical conversion coating to the Part 2 Filler and to the bare surfaces of the midflap skin. Refer to SRM 51-10-2.
9. Apply two coats of BMS 10-11, Type I primer to the repair parts and the mating surfaces of the midflap skin. Refer to SOPM 20-41-02.
10. Install the repair parts with BMS 5-95 sealant between the mating surfaces. Apply a fillet seal to the Part 1 Doubler and the midflap skin with BMS 5-95 sealant.
11. Install the fasteners wet with BMS 5-95 sealant.
12. Apply one layer of BMS 10-60, Type II enamel to the repair area. Refer to AMM 51-21.
13. Activate the trailing edge flap system. Refer to AMM 27-51-00.

Outboard Trailing Edge Mid-Flap Leading Edge Chafing Repair
Figure 7 (Sheet 1)

NOTES

- THIS REPAIR WILL NOT HAVE AN EFFECT ON A STRUCTURAL SIGNIFICANT ITEM (SSI) GIVEN IN SRM 51-00-4, FIG. 3. THUS NO CHANGE TO THE SUPPLEMENTAL STRUCTURAL INSPECTION DOCUMENT (SSID) INSPECTION PROGRAM IS NECESSARY.
- WHEN YOU USE THIS REPAIR REFER TO:
  - AMM 27-51-00 FOR DESCRIPTION AND OPERATION OF TRAILING EDGE FLAP SYSTEM
  - SOPM 20-41-02 FOR APPLICATION OF FINISHES
  - SOPM 20-44-04 FOR APPLICATION OF URETHANE COMPATIBLE PRIMER
  - SRM 51-10-1 FOR DAMAGE CLASSIFICATION
  - SRM 51-10-2 FOR PROTECTIVE TREATMENT OF METALLIC AND GRAPHITE MATERIALS
  - SRM 51-20-4 FOR REPAIR SEALING
  - SRM 51-30 FOR FASTENER CODE, INSTALLATION AND REMOVAL, HOLE SIZES, AND EDGE MARGINS

[A] REMOVE ANY FASTENERS THAT THE PART 1 DOUBLER WILL BE INSTALLED ON TOP OF. REPLACE THE REMOVED FASTENERS WITH THE SPECIFIED FASTENERS THROUGH THE PART 1 DOUBLER. INSTALL COUNTERSUNK WASHERS IF NECESSARY. REFER TO SRM 51-30-8.

[B] REPAIR TO THE INBOARD END OF THE MIDFLAP IS SHOWN. REPAIR TO THE OUTBOARD END OF THE MIDFLAP IS IDENTICAL.

FASTENER SYMBOLS

- INITIAL FASTENER LOCATION. INSTALL THE SAME DIAMETER AND TYPE FASTENER AS THE INITIAL FASTENER (UP TO 1/32 INCH DIAMETER OVERSIZE). [A]
- INITIAL FASTENER LOCATION. INSTALL A BACR15FP6E()R BLIND RIVET (UP TO 1/32 INCH DIAMETER OVERSIZE). [A]
- REPAIR FASTENER LOCATION. INSTALL A BACR15FP5E()R BLIND RIVET.

REPAIR MATERIAL			
PART		QTY	MATERIAL
1	DOUBLER	1	0.032 INCH THICK 301 CRES 1/2 HARD
2	FILLER	1	0.050 INCH THICK CLAD 2024-T3

TABLE I

Outboard Trailing Edge Mid-Flap Leading Edge Chafing Repair
Figure 7 (Sheet 2)

BOEING PROPRIETARY - Copyright © - Unpublished Work - See title page for details.

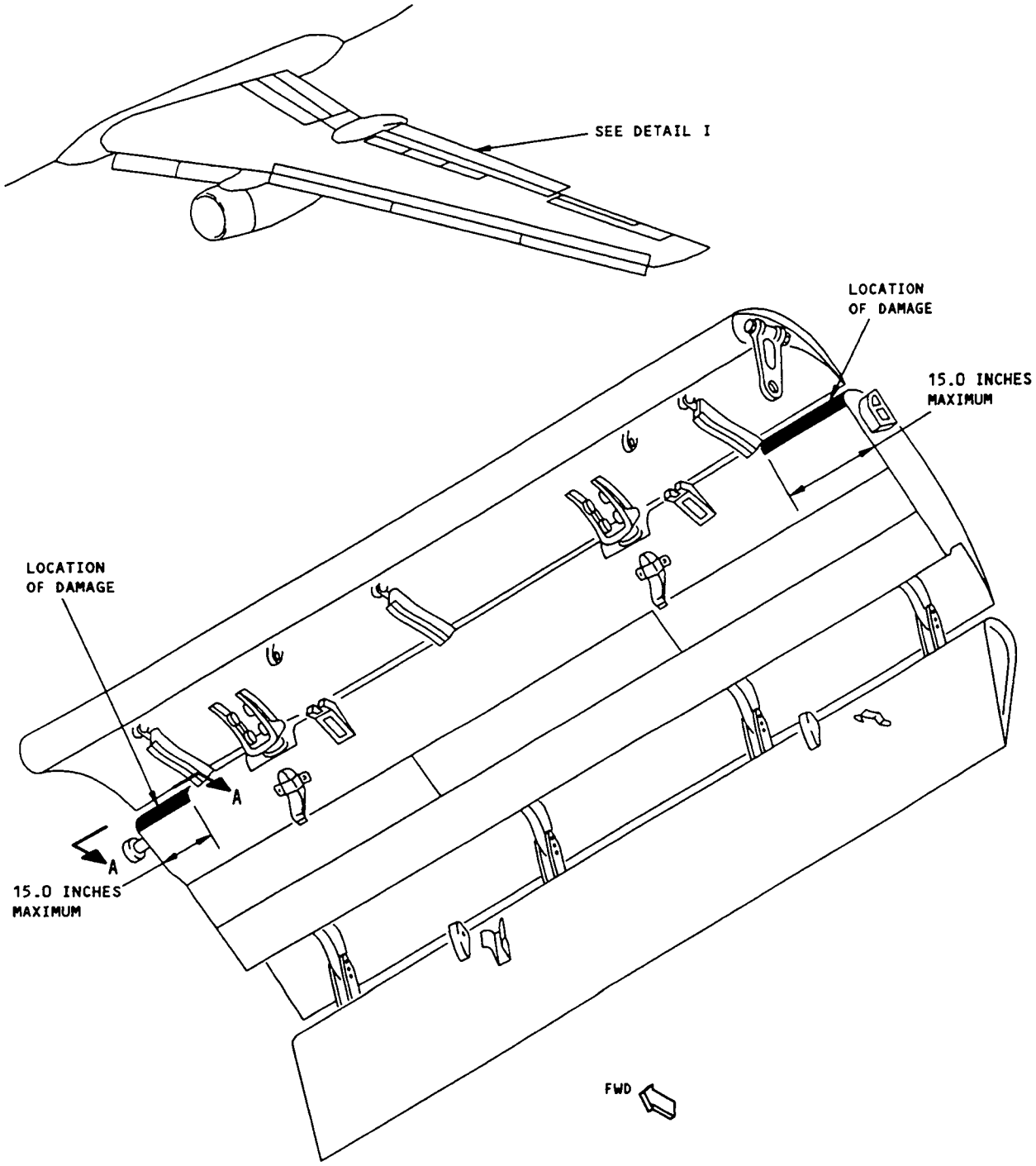

LEFT SIDE IS SHOWN
RIGHT SIDE IS OPPOSITE

DETAIL I

Outboard Trailing Edge Mid-Flap Leading Edge Chafing Repair
Figure 7 (Sheet 3)

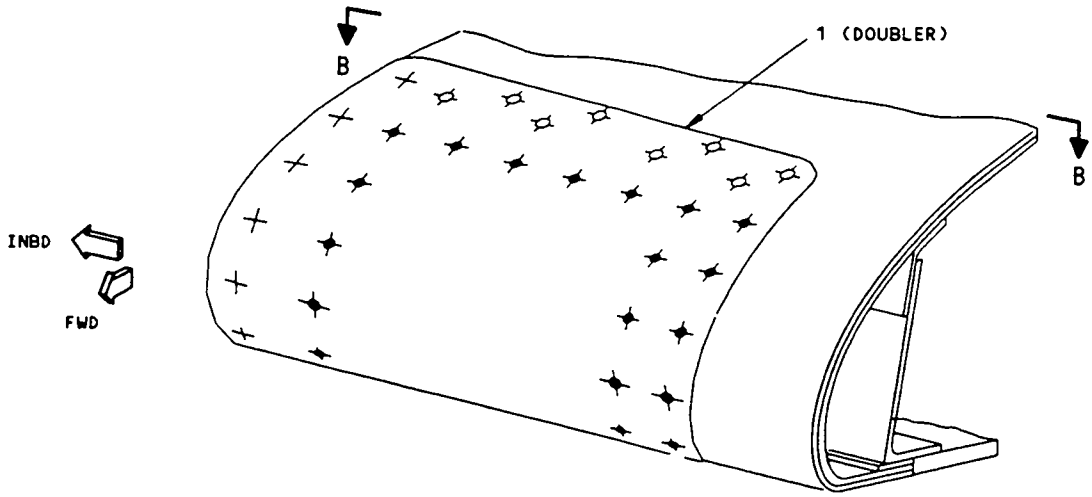

INBOARD END IS SHOWN B

SECTION A-A

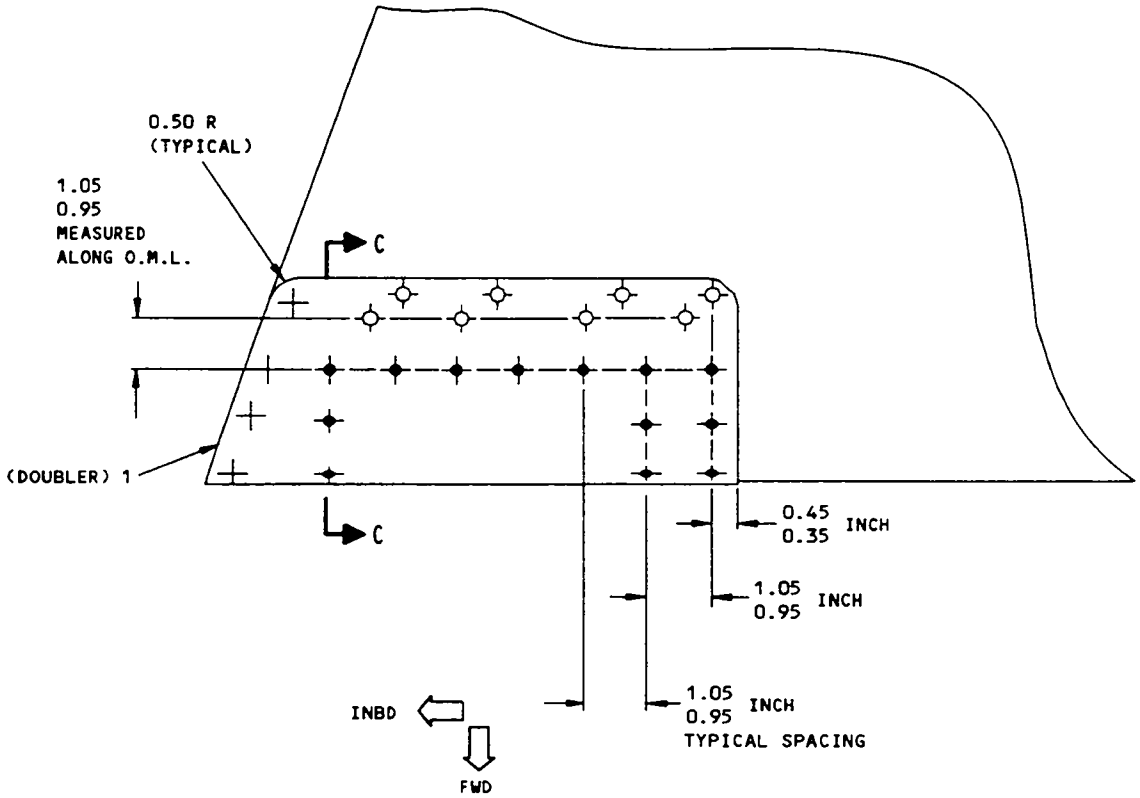

VIEW B-B A

Outboard Trailing Edge Mid-Flap Leading Edge Chafing Repair
Figure 7 (Sheet 4)

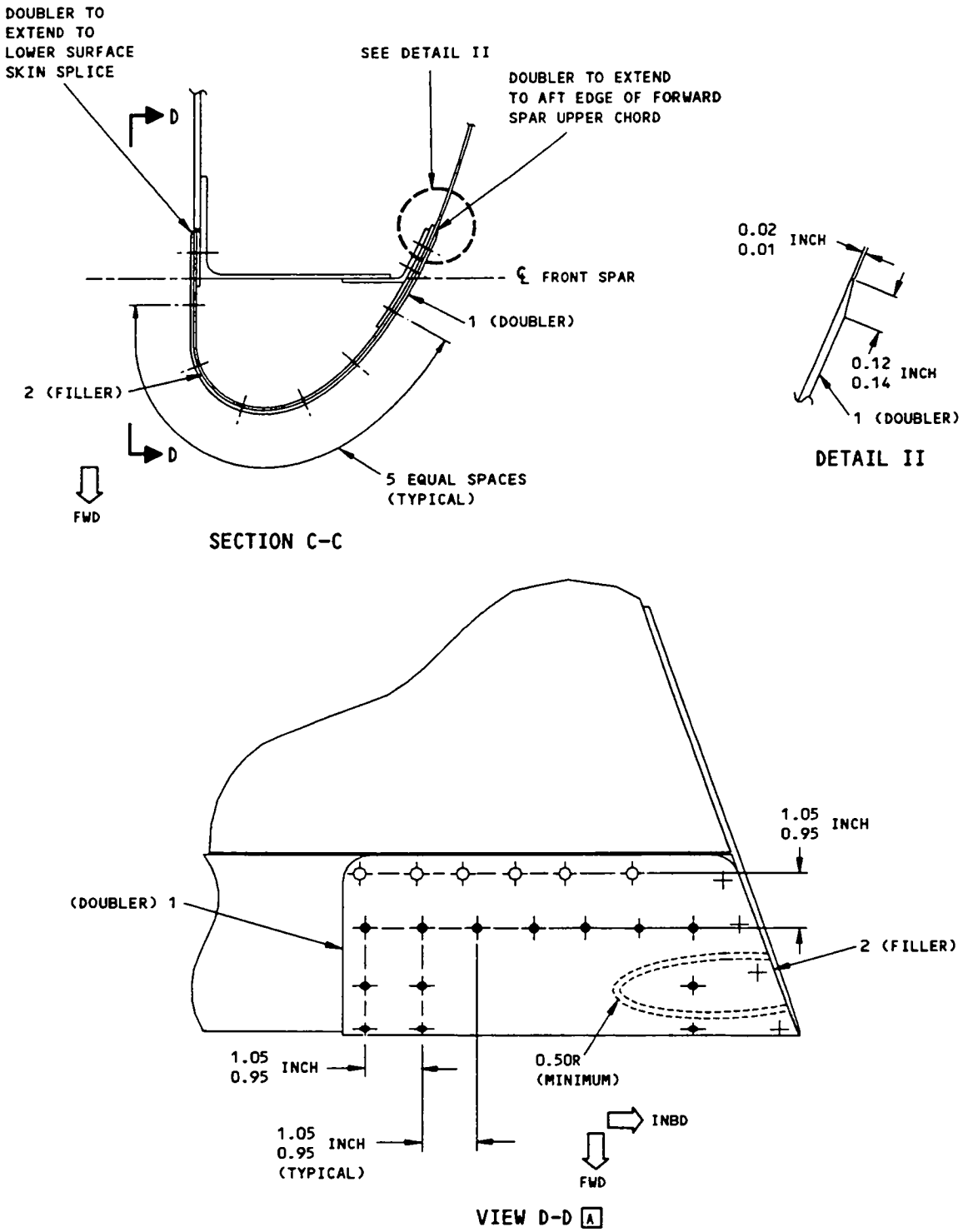

Outboard Trailing Edge Mid-Flap Leading Edge Chafing Repair
Figure 7 (Sheet 5)

REPAIR INSTRUCTIONS

CAUTION: IF THE FIBERGLASS SKIN REPAIR IS APPLIED, THEN OVER TIME, A DELAMINATION CAN OCCUR. BOEING RECOMMENDS THAT YOU DO A METAL BONDED REPAIR AS GIVEN IN SRM 51-40-6, PARAGRAPH 11. IF YOU CHOOSE TO DO THE FIBERGLASS SKIN REPAIR, BOEING RECOMMENDS THAT YOU DO INSPECTIONS OF THE REPAIR AREA FOR DELAMINATION. YOU CAN DO THE INSPECTIONS AS PART OF OTHER SCHEDULED MAINTENANCE INTERVALS. IF DELAMINATION DOES OCCUR, REMOVE AND REPLACE THE REPAIR.

1. Removal of Aluminum Skin

   A. Remove all fasteners that pass through the skin.

      NOTE: Tag and/or record fasteners removed as to location, size and type so proper fasteners are reinstalled.

   B. Start removal of skin at trailing edge of spoiler. Separate the trailing edge bond by driving hardwood wedges between the faying surfaces of the joint as described in 51-40-5.

      NOTE: Dry ice may be used to embrittle the adhesive to provide easier separation of the bonded surfaces.

   C. Peel skin from honeycomb core area taking care to minimize damage to core.

      NOTE: Dry ice may be used to facilitate removal.

      Slitting of the skin into strips may be done to simplify its removal.

   D. Remove aluminum doublers, as required, using wedges and dry ice as described above.

2. Preparation of Damaged Area for Repair

   A. If honeycomb core damage exists, refer to 51-40-6 for repair procedures.

   B. Lightly abrade the exposed adhesive or primer on the exposed edge members of the part using No. 400-grit silicon carbide cloth, Scotch Brite, very fine, Type A, aluminum oxide abrasive cloth or aluminum wool.

   C. Abrade the surfaces of any adhesive patches adhering to the honeycomb core after skin removal with 80 grit or finer abrasive paper or cloth. Taper sand the edges of the adhesive areas to a feather edge, fairing it with the surrounding core.

      CAUTION: DO NOT PERMIT SOLVENT TO DRY ON THE CLEANED AREA, BUT WIPE QUICKLY WITH A SEPARATE CLEAN DRY CLOTH.

      WEAR CLEAN COTTON GLOVES WHEN CLEANED SURFACES MUST BE HANDLED.

   D. Wipe the abraded area with a soft clean cloth moistened with MIBK, BMS 11-5, type 1 or trichloroethylene until no trace of foreign material remains.

   E. Apply EC776SR adhesive primer to the edge members per 51-40-6.

Skin Repair - Ground Spoilers
Figure 1 (Sheet 1)

3. Preparation of Fiberglass Skin Plies

A. Cut a piece of fiberglass cloth, part 1, that is large enough for the required number of skin and doubler plies.

NOTE: The fiberglass cloth may be cut into sections which are readily handled size.

B. Cut two pieces of parting film approximately 3 inches larger all around than the fiberglass cloth and tape one piece down to a smooth surface. (Use PVA film or other parting films listed in 51-40-7, Fig. 2.)

C. Prepare resin adhesive, Resin Mix 1, per procedure described in 51-40-9, Fig. 2 and spread enough resin over the taped parting film to impregnate the cloth. The weight of the adhesive required to impregnate the cloth is approximately equal to the weight of the dry fiberglass cloth.

NOTE: The adhesives described in 51-40-6 may be used as alternates for Resin Mix 1. Resin Mix 1 is applicable to fiberglass repairs only.

D. Place the fiberglass cloth over the adhesive.

E. Cover the cloth with the second layer of parting film and press the adhesive through the cloth by working over the parting film with a squeegee or roller to completely impregnate the fiberglass cloth.

F. Cut the impregnated cloth to the required size and shape for each individual skin or doubler ply.

NOTE: Skin plies for complete reskinning of the upper surface should be cut approximately 1-inch oversize.

The parting film on both sides of the cloth decreases edge fraying when cutting the cloth.

G. For upper surface skin repairs lay up skin and doubler plies, as required by the applicable details, on a flat aluminum or steel plate that is free of surface scratches or defects.

NOTE: A suitable parting film or release agent must be applied to the lay up plate.

H. Remove wrinkles and entrapped air by using a squeegee over the parting film that covers each ply.

I. Position damaged part on wet lay up of skin plies and place perforated parting film over skin plies that extend beyond edges of part.

J. Cover entire part with several layers of dry fiberglass cloth or bleeder fabric, making sure it is in complete contact with perforated parting film around edges of part.

Skin Repair - Ground Spoilers
Figure 1 (Sheet 2)

K. For lower skin repairs, lay up skin and doubler plies, as required, by the applicable details, directly on the exposed honeycomb core.

L. After laying up last ply, cover the entire surface of the lay up with a perforated parting film, and one or two plies of bleeder fabric.

4. Cure of Repair

A. For upper skin repair, vacuum bag entire lay up, sealing vacuum bag material to tooling plate.

NOTE: Allow sufficient excess bag material to permit it to be formed around hinge and actuator fittings when vacuum is applied. Pad any edges or protruding hardware that would puncture bag material with bleeder fabric.

B. For lower skin repair, vacuum bag may be wrapped completely around part and sealed without using a supporting plate. (See NOTE, par. A.)

C. Apply vacuum to bagged part, and maintain a minimum vacuum pressure of 20 inches of mercury during resin cure.

D. Required curing time for Resin Mix 1 is 10 to 12 hours at 70°F.

NOTE: A cured repair is hard and resounds when tapped lightly with a coin or other light metal.

E. Remove vacuum bag, bleeder fabric, and parting films after curing.

NOTE: The repair should be free from pits, blisters, starved areas and excess resin deposits.

F. When repair is to upper skin, trim excess fiberglass back to edge of panel and smooth edges with 80 grit or finer abrasive paper or cloth.

5. Finishing of Repair Surface

A. For lower skin:

(1) Lightly abrade the repaired skin with 180 grit or finer abrasive paper or cloth.

(2) Seal surface with Resin Mix 3 prepared per 51-40-9, Fig. 2.

(3) Cure a minimum of 24 hours at 70°F before use.

B. For upper skin:

(1) Lightly abrade the repair surface with 180 grit or finer abrasive paper or cloth.

(2) Remove dust from surface with acetone-moistened cloth and check for defects.

(3) Seal any exposed fibers with Resin Mix 3 prepared per 51-40-9, Fig. 2.

Skin Repair - Ground Spoilers
Figure 1 (Sheet 3)

(4) Cure a minimum of 24 hours at 70°F before use.

C. Apply pinhole filler, if necessary.

D. Install fasteners as noted on details.

E. Finish per 51-20 of Maintenance Manual including the application of conductive coating.

NOTES

- THESE REPAIRS APPLY TO GROUND SPOILERS ONLY
- USE THESE REPAIRS FOR TOTAL RESKINNING OF UPPER AND/OR LOWER SKINS OF THE SPOILER
- TOTAL RESKINNING OF THE SPOILER IS RECOMMENDED IF THERE ARE MORE THAN THREE SEPARATE REPAIRS REQUIRED OR MORE THAN 60% OF THE TOTAL AREA IS DAMAGED
- SEE FIG. 2 FOR PARTIAL REPAIR OF GROUND SPOILER
- ALL DIMENSIONS SHOWN IN INCHES
- REFER TO THE FOLLOWING WHEN USING THIS REPAIR

  51-10-2 FOR PROTECTIVE TREATMENT OF METAL

  51-40-5 FOR BONDED METAL STRUCTURAL REPAIR

  51-40-6 FOR ALUMINUM HONEYCOMB STRUCTURAL REPAIRS

  51-70 FOR AERODYNAMIC SMOOTHNESS REQUIREMENTS

[A] POT THIS AREA PER PROCEDURES IN 51-40-6

[B] SHAVE DRIVEN HEAD FLUSH WITH SURFACE
+ 0.005
- 0.000

[C] CONDUCTIVE FASTENERS -- INSTALL A MINIMUM OF TWO PER REPAIR, INSTALLED IN AN AREA OF ALUMINUM STRUCTURE. USE RESISTANCE VALUE CHECK PER BAC5117. RESISTANCE NOT TO EXCEED 0.50 OHM BETWEEN FASTENER AND STRUCTURE. RESISTANCE NOT TO EXCEED 300,000 OHM BETWEEN CONDUCTIVE COATING AND FASTENER

[D] RIVET SPACING 1.25 TYPICAL EXCEPT 0.75 IN DOUBLER AREA

[E] SEAL INSTALLED ON AIRPLANE CUM LINE 280 AND ON

[F] TYPICAL FOR SPOILERS WITH ALUMINUM INSERTS. TYPICAL FOR REPLACEMENT OF UPPER AND/OR LOWER SKINS

[G] TYPICAL FOR SPOILERS WITHOUT INSERTS AT TRAILING EDGE

[H] IF STYLE 181, 1581 or 7781 FIBERGLASS CLOTH IS NOT AVAILABLE, THREE PLIES OF STYLE 128 or 1528 CLOTH CAN BE USED INSTEAD OF TWO PLIES OF STYLE 181, 1581 OR 7781.

Skin Repair - Ground Spoilers
Figure 1 (Sheet 4)

SYMBOLS

- + CONDUCTIVE FASTENER LOCATION [C]
- ⊕ EXISTING FASTENER LOCATION. TAG OR NOTE FASTENER ON REMOVAL FOR PROPER FASTENER REINSTALLATION
- ✦ MS20426AD5 IN NEW LOCATIONS
- ✦ NAS1739M5 IN NEW LOCATIONS

REPAIR MATERIAL			
PART		QTY	MATERIAL
[1]	SKIN OR DOUBLER	AS REQD	STYLE 181, 1581 OR 7781 FIBER-GLASS CLOTH VOLAN "A" FINISH [H]
[2]	STRAP	1	0.040 X 1.00 WIDE PHENOLIC STRIP, LAMINATED THERMOSETTING SHEET, COTTON FABRIC, PHENOLIC RESIN MIL-P-15035 TYPE FBM OPTIONAL: TYPE FBE OR FBG

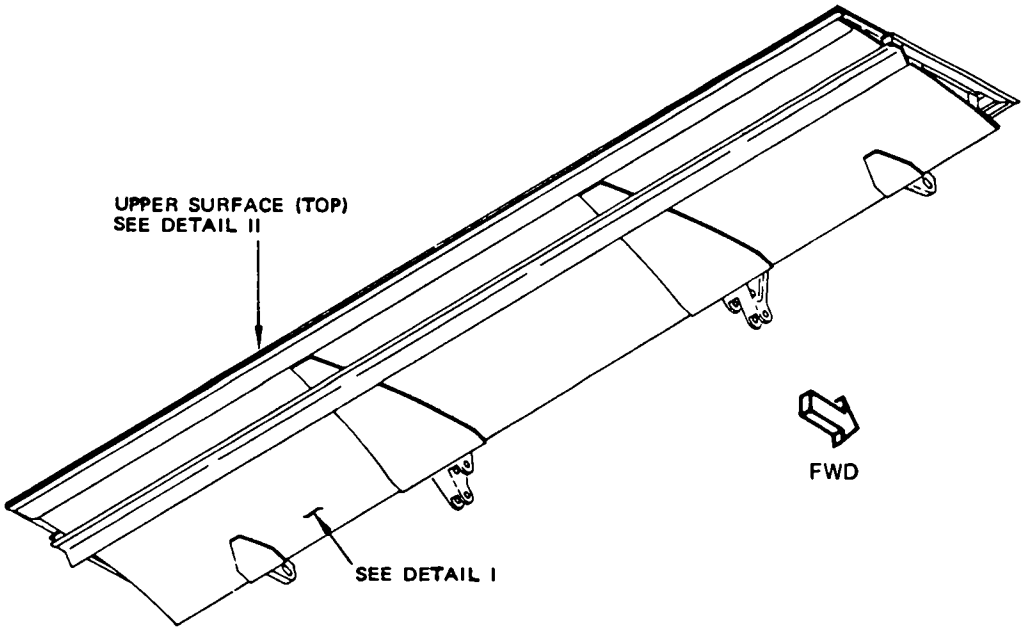

GROUND SPOILER
BOTTOM VIEW

Skin Repair - Ground Spoilers
Figure 1 (Sheet 5)

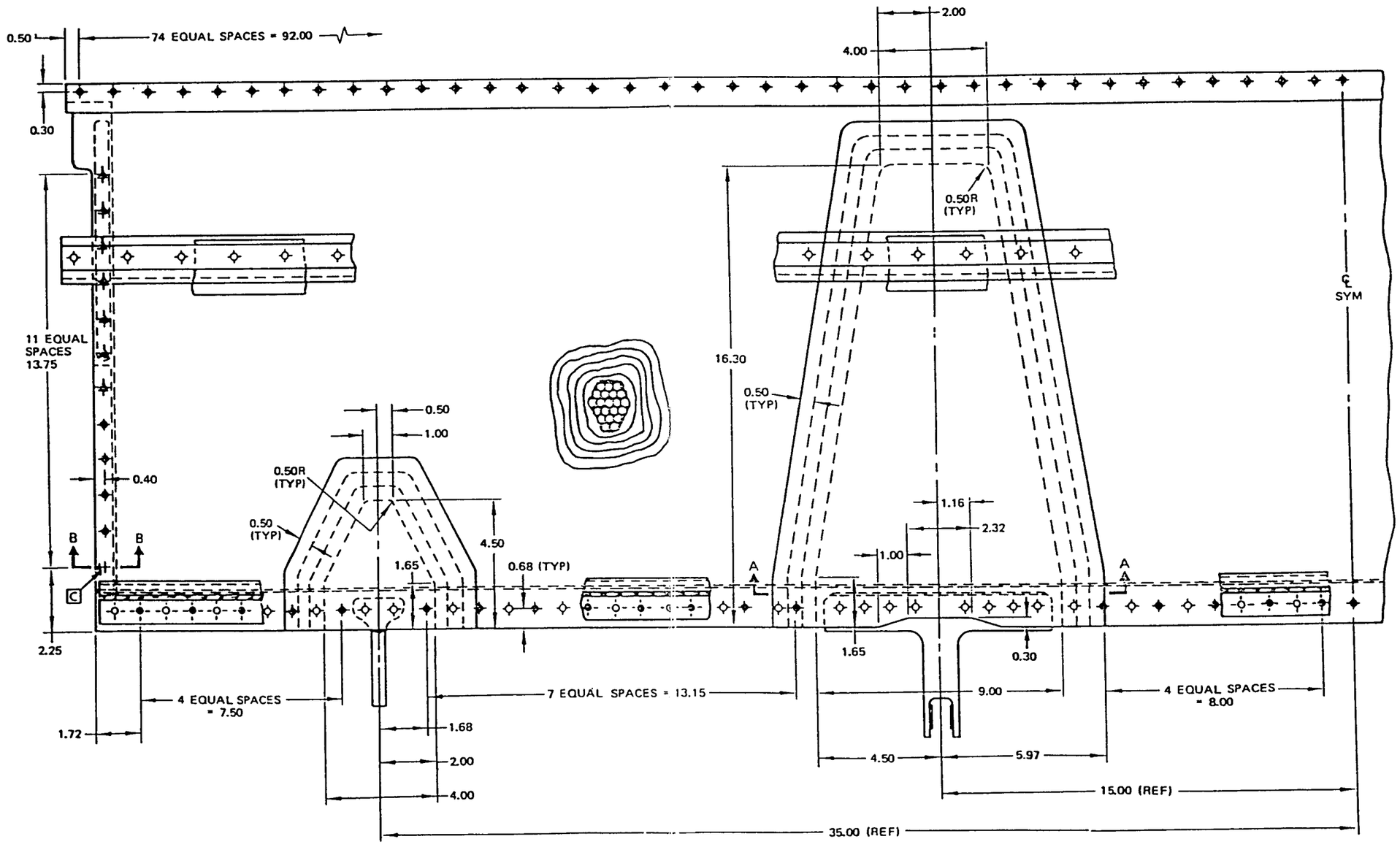

BOTTOM VIEW
DETAIL I

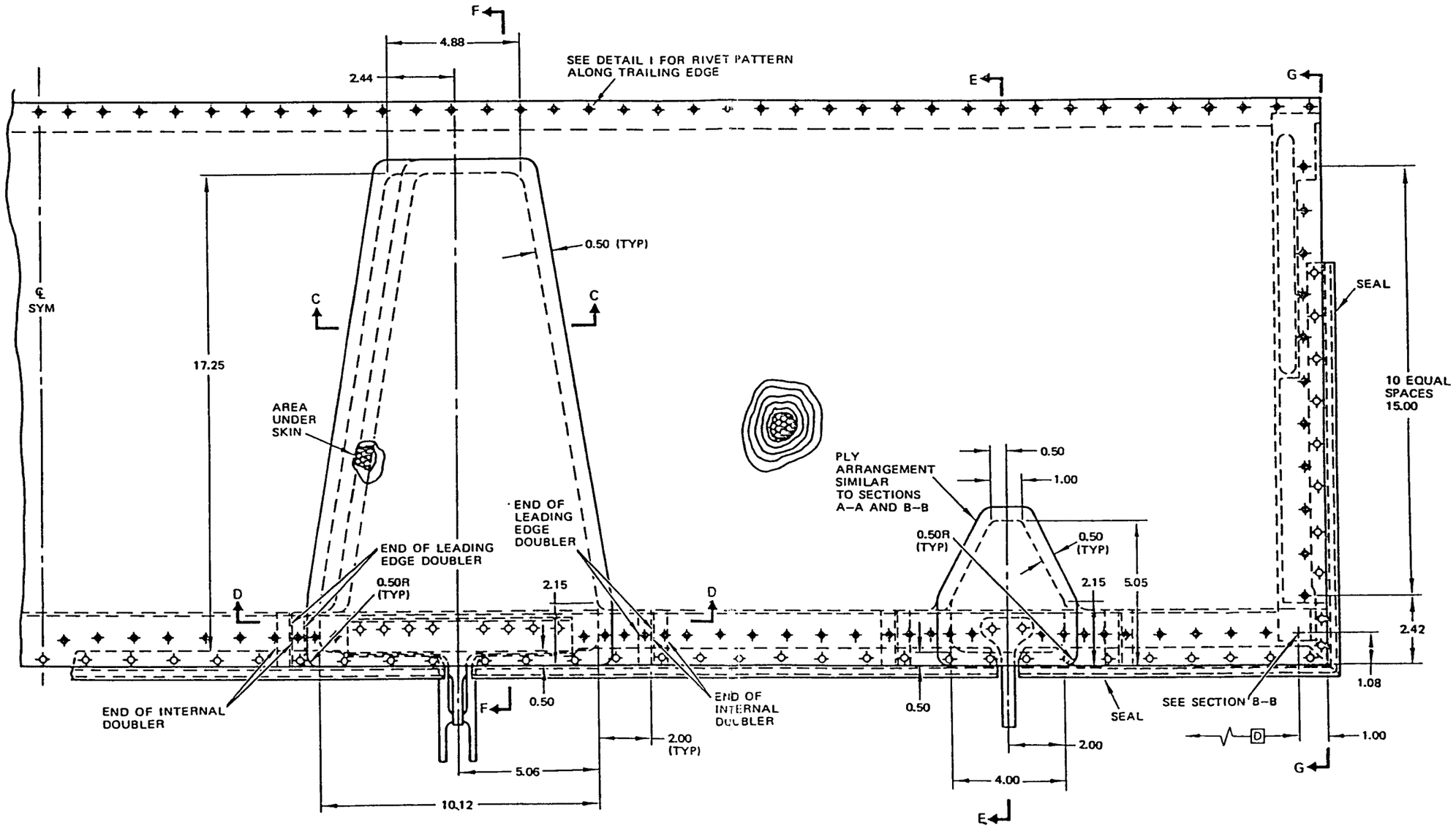

TOP VIEW – TOP SURFACE SHOWN ONLY
DETAIL II

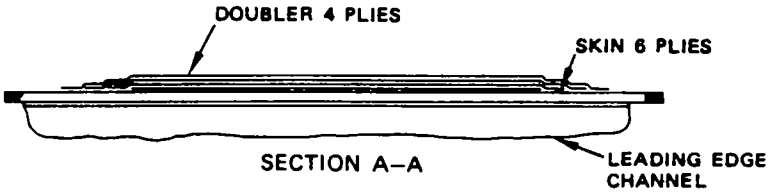

SECTION A–A

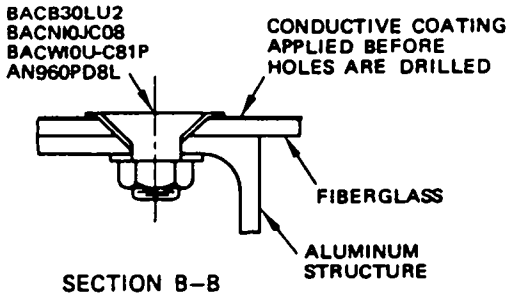

SECTION B–B

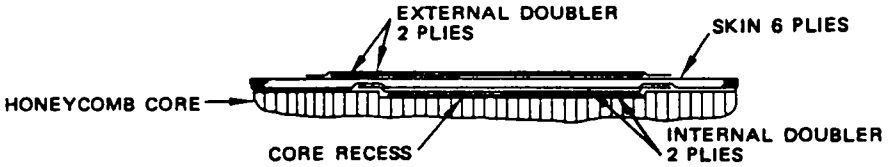

SECTION C–C
(PLY SCHEMATIC ONLY)

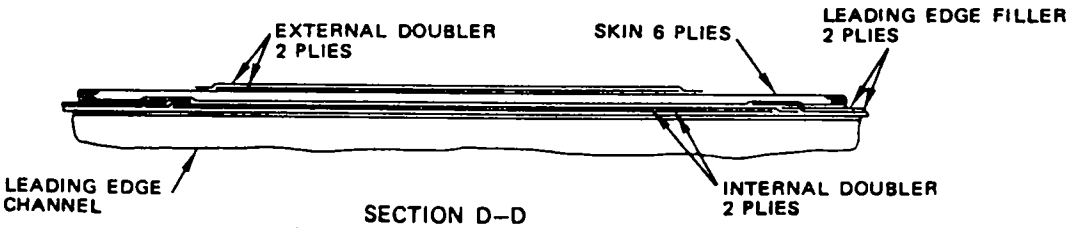

SECTION D–D
(PLY SCHEMATIC ONLY)

Skin Repair - Ground Spoilers
Figure 1 (Sheet 8)

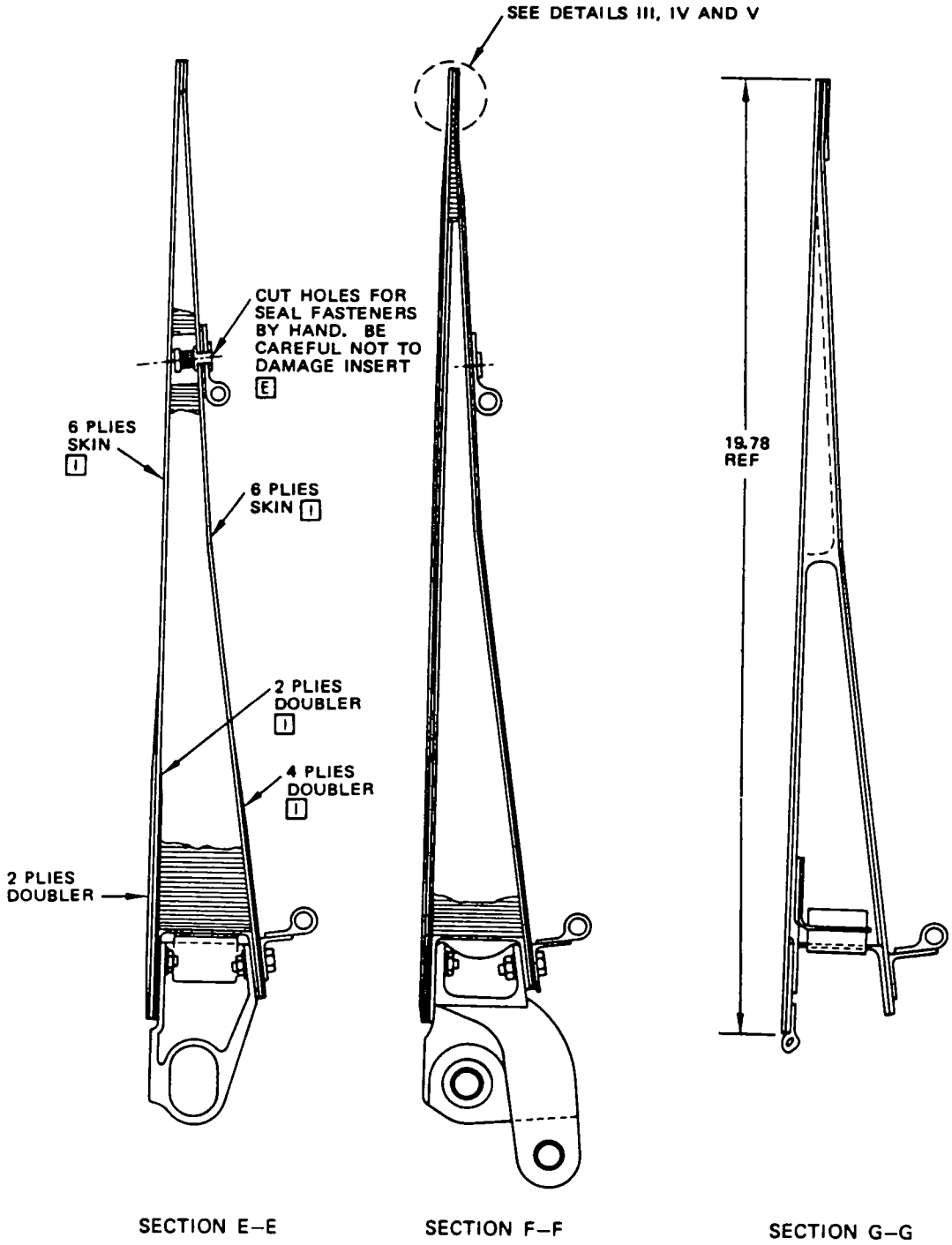

Skin Repair - Ground Spoilers
Figure 1 (Sheet 9)

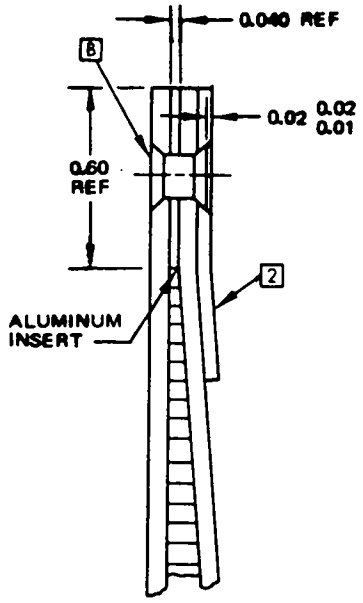

DETAIL III F

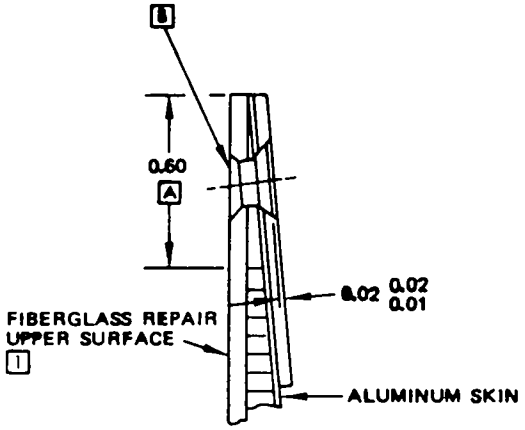

FIBERGLASS REPAIR ON UPPER SURFACE

DETAIL IV G

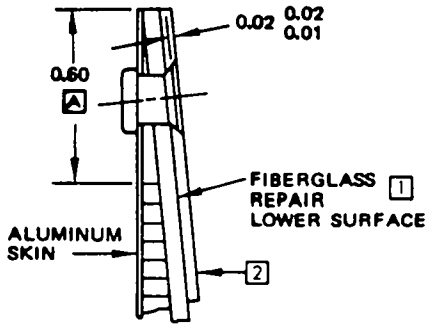

FIBERGLASS REPAIR ON LOWER SURFACE

DETAIL V G

APPLICABILITY
TOTAL RESKINNING OF THE SPOILER IS RECOMMENDED IF THERE ARE MORE THAN THREE SEPARATE REPAIRS REQUIRED OR MORE THAN 60% OF THE TOTAL AREA IS DAMAGED. REFER TO SRM 57-50-5, FIG. 1.

REPAIR INSTRUCTIONS

CAUTION: IF THE FIBERGLASS SKIN REPAIR IS APPLIED, THEN OVER TIME, A DELAMINATION CAN OCCUR. BOEING RECOMMENDS THAT YOU DO A METAL BONDED REPAIR AS GIVEN IN SRM 51-40-6, PARA. 11. IF YOU CHOOSE TO DO THE FIBERGLASS SKIN REPAIR, BOEING RECOMMENDS THAT YOU DO INSPECTIONS OF THE REPAIR AREA FOR DELAMINATION. YOU CAN DO THE INSPECTIONS AS PART OF OTHER SCHEDULED MAINTENANCE INTERVALS. IF DELAMINATION DOES OCCUR, REMOVE AND REPLACE THE REPAIR.

1. Damage Evaluation
   A. Determine the extent of damage, including any area which has been contaminated by the entry of water, oil, fuel, dirt and other foreign substance.
   B. Check for structural delamination in the vicinty of any damage and at points where loads are concentrated in upper skins.
      NOTE: The extent of delamination which is not always visually apparent, may be determined by tapping the skin with a metallic object such as a coin.
2. Removal of Aluminum Skin
   A. Remove all fasteners that pass through the damage area.
      NOTE: Tag and/or record fasteners removed as to location, size and type so proper fasteners are reinstalled.
   B. Slit skin around edges of delaminated area, taking care not to cut into the honeycomb core.
   C. Peel skin from honeycomb core taking care to minimize damage to core.
      NOTE: Dry ice may be used to embrittle the adhesive to provide easier separation of the bonding surfaces. Slitting of the skin into strips may be done to simplify its removal.
   D. Remove aluminum doublers as required, using hardwood wedges described in SRM 51-40-5 and dry ice as described above.
3. Preparation of Damaged Area for Repair
   A. If honeycomb core damage exists, repair per SRM 51-40-6.
   B. Clean the area of aluminum skin that the fiberglass repair plies will overlap per procedures in SRM 51-40-6.
   C. Apply adhesive primer as described in SRM 51-40-6.
4. Preparation of Fiberglass Skin Plies
   A. Cut a piece of fiberglass cloth, part 1, that is large enough for the required number of skin and doubler plies.
   B. Cut two pieces of parting film approximately 3 inches larger all around than the fiberglass cloth and tape one piece down to a smooth surface. (Use PVA film or other parting films listed in SRM 51-20-3.

Partial Skin Repair - Ground Spoilers
Figure 2 (Sheet 1)

BOEING PROPRIETARY - Copyright © - Unpublished Work - See title page for details.

C. Prepare resin adhesive, Resin Mix 1, per procedure described in 51-40-9, Fig. 2 and spread enough resin over the taped parting film to impregnate the cloth. The weight of the adhesive required to impregnate the cloth is approximately equal to the weight of the dry fiberglass cloth.

NOTE: The adhesives described in 51-40-6 may be used as alternates for Resin Mix 1. Resin Mix 1 is applicable to fiberglass repairs only.

D. Place the fiberglass cloth over the adhesive.

E. Cover the cloth with the second layer of parting film and press the adhesive through the cloth by working over the parting film with a squeegee or roller to completely impregnate the fiberglass cloth.

F. Cut the impregnated cloth to the required size and shape for each individual skin or doubler ply. Cut the smallest skin ply to just fit the exposed core without overlapping the adjacent skin areas.

NOTE: The remaining skin plies of the upper skin repair should be cut to extend approximately two to three inches over the edge of the spoiler repair area.

G. For upper surface skin repairs, lay up skin and doubler plies, as required, by the applicable details, on a flat plate that is free of scratches or other defects.

NOTE: A suitable parting film or release agent must be applied to the lay up plate.

H. Remove wrinkles and entrapped air by using a squeegee over the parting film that covers each ply.

I. Position damaged part on wet lay up and place perforated parting film over the repair plies that extend beyond edges of part.

J. Cover entire part with several layers of dry fiberglass cloth or other bleeder fabric, making sure the fabric is in complete contact with the perforated parting film around edges of part.

K. For lower skin repairs, lay up skin and doubler plies, as required, by the applicable details, directly on the exposed honeycomb core.

Partial Skin Repair - Ground Spoilers
Figure 2 (Sheet 2)

L. After laying up the last ply, cover the entire surface of the lay up with a perforated parting film and one or two plies of bleeder fabric.

NOTE: The area of the part being repaired immediately adjacent to the edge of the fiberglass repair may be coated with a mold release for a width of two to three inches to prevent adhesion of excess resin during cure.

5. Cure of Repair

A. For upper skin repair, vacuum bag entire lay up, sealing vacuum bag material to tooling plate.

NOTE: Allow sufficient excess bag material to permit it to be formed around hinge and actuator fittings when vacuum is applied. Pad any edges or protruding hardware that would puncture bag material with bleeder fabric.

B. For lower skin repair, vacuum bag may be wrapped completely around part and sealed without using a supporting plate. (See NOTE, par. A.)

C. Apply vacuum to bagged part, and maintain a minimum vacuum pressure of 20 inches of mercury during resin cure.

NOTE: Required curing time for Resin Mix 1 is 10 to 12 hours at 70°F. A cured repair is hard and resounds when tapped lightly with a coin or other light metal.

D. Remove vacuum bag, bleeder fabric and parting films after curing.

NOTE: The repair should be free from pits, blisters, starved areas and excess resin deposits.

E. When repair is to upper skin, trim excess fiberglass back to edge of panel and smooth edges with 80 grit of finer abrasive paper or cloth.

6. Finishing of Repair Surface

A. For lower skin:

(1) Lightly abrade the repaired skin with 180 grit or finer abrasive paper or cloth.

(2) Seal surface with Resin Mix 3 prepared per 51-40-9, Fig. 2.

(3) Cure a minimum of 24 hours at 70°F before use.

Partial Skin Repair - Ground Spoilers
Figure 2 (Sheet 3)

B. For upper skin:

(1) Lightly abrade the repair surface with 180 grit or finer abrasive paper or cloth.

(2) Remove dust from surface with acetone-moistened cloth and check for defects.

(3) Seal any exposed fibers with Resin Mix 3 prepared per SRM 51-40-9, Fig. 2.

(4) Cure a minimum of 24 hours at 70°F before use.

C. Apply pinhole filler, if necessary.

D. Install fasteners as noted on details.

E. Finish per 51-20 of Maintenance Manual including the application of conductive coating.

NOTES

- THESE REPAIRS WILL NOT HAVE AN EFFECT ON A STRUCTURALLY SIGNIFICANT ITEM (SSI) GIVEN IN SRM 51-00-4, FIG. 3. THUS, NO CHANGE TO THE SUPPLEMENTAL STRUCTURAL INSPECTION DOCUMENT (SSID) INSPECTION PROGRAM IS NECESSARY.
- ALL DIMENSIONS SHOWN IN INCHES.
- REFER TO THE FOLLOWING WHEN USING THIS REPAIR:
  - SRM 51-10-2 FOR PROTECTIVE TREATMENT OF METAL
  - SRM 51-40-5 FOR BONDED METAL STRUCTURAL REPAIR
  - SRM 51-40-6 FOR ALUMINUM HONEYCOMB STRUCTURAL REPAIRS
  - SRM 51-70 FOR AERODYNAMIC SMOOTHNESS REQUIREMENTS.

[A] THE REPAIRS SHOWN ARE ONLY EXAMPLES OF POSSIBLE CONFIGURATIONS. ACTUAL REPAIRS MAY BE ANY SIZE AND SHAPE WITHIN THE LIMITS SPECIFIED.

[B] LOCATION OF RIVETS ON PARTIAL REPAIRS WILL VARY WITH SIZE AND SHAPE OF REPAIR. IN AREA OF OVERLAPPING PLIES USE 0.75 INCH SPACING AND 1.25 INCH SPACING IN OTHER AREAS.

[C] INDIVIDUAL DAMAGE AREAS OCCURING WITHIN 6.00 INCH OF EACH OTHER SHOULD BE TREATED AS ONE REPAIR.

[D] REPAIR SIZE SHALL NOT BE LESS THAN SHOWN IN THIS AREA.

[E] IF DAMAGE OCCURS WITHIN 5.00 INCHES OF AN EDGE, REPAIR SHOULD BE EXTENDED TO THAT EDGE.

[F] IF STYLE 181, 1581 OR 7781 FIBERGLASS IS NOT AVAILABLE, THREE PLIES OF STYLE 128 OR 1528 CLOTH CAN BE USED INSTEAD OF TWO PLIES OF 181, 1581 OR 7781.

FASTENER SYMBOLS

INITIAL FASTENER LOCATION. TAG OR NOTE FASTENER ON REMOVAL FOR PROPER FASTENER REINSTALLATION.

REPAIR FASTENER LOCATION. INSTALL A BACR15BA5AD()C FASTENER. MS20426AD5 IS AN ALTERNATIVE FASTENER.

REPAIR FASTENER LOCATION. INSTALL A BACR15FP5M BLIND FASTENER. NAS1739M5 IS AN ALTERNATIVE FASTENER.

REPAIR MATERIAL			
PART		QTY	MATERIAL
[1]	SKIN OR DOUBLER	AS REQD	STYLE 181, 1581 OR 7781 FIBERGLASS CLOTH VOLAN "A" FINISH [F]
[2]	STRAP	1	0.040 X 1.00 WIDE PHENOLIC STRIP, LAMINATED THERMOSETTING SHEET, COTTON FABRIC, PHENOLIC RESIN MIL-P-15035 TYPE FBM OPTIONAL: TYPE FBE OR FBG

TABLE I

Partial Skin Repair - Ground Spoilers
Figure 2 (Sheet 4)

BOEING PROPRIETARY - Copyright © - Unpublished Work - See title page for details.

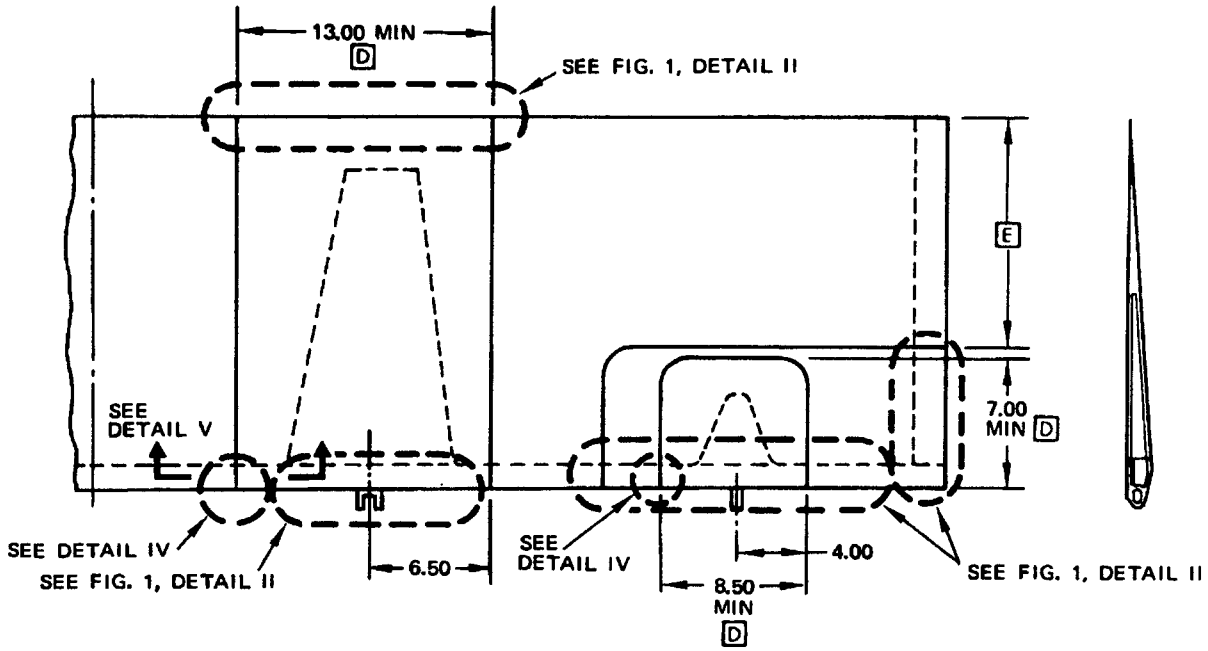

PLAN VIEW A

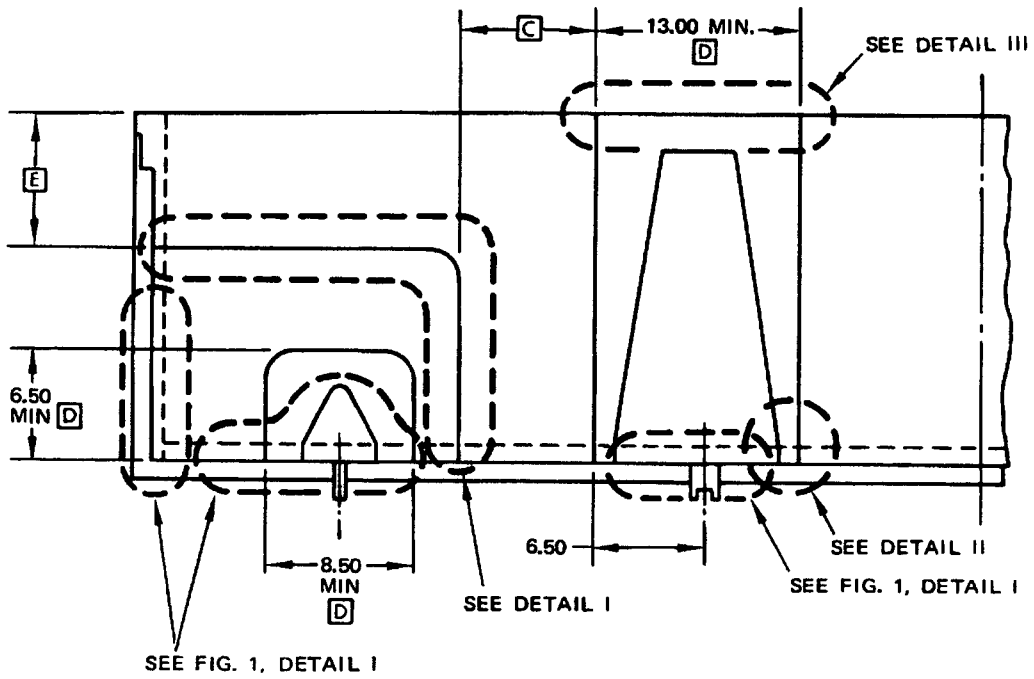

BOTTOM VIEW A

SCHEMATIC OF GROUND SPOILER
SHOWING REPAIR LOCATIONS

Partial Skin Repair - Ground Spoilers
Figure 2 (Sheet 5)

BOEING PROPRIETARY - Copyright © - Unpublished Work - See title page for details.

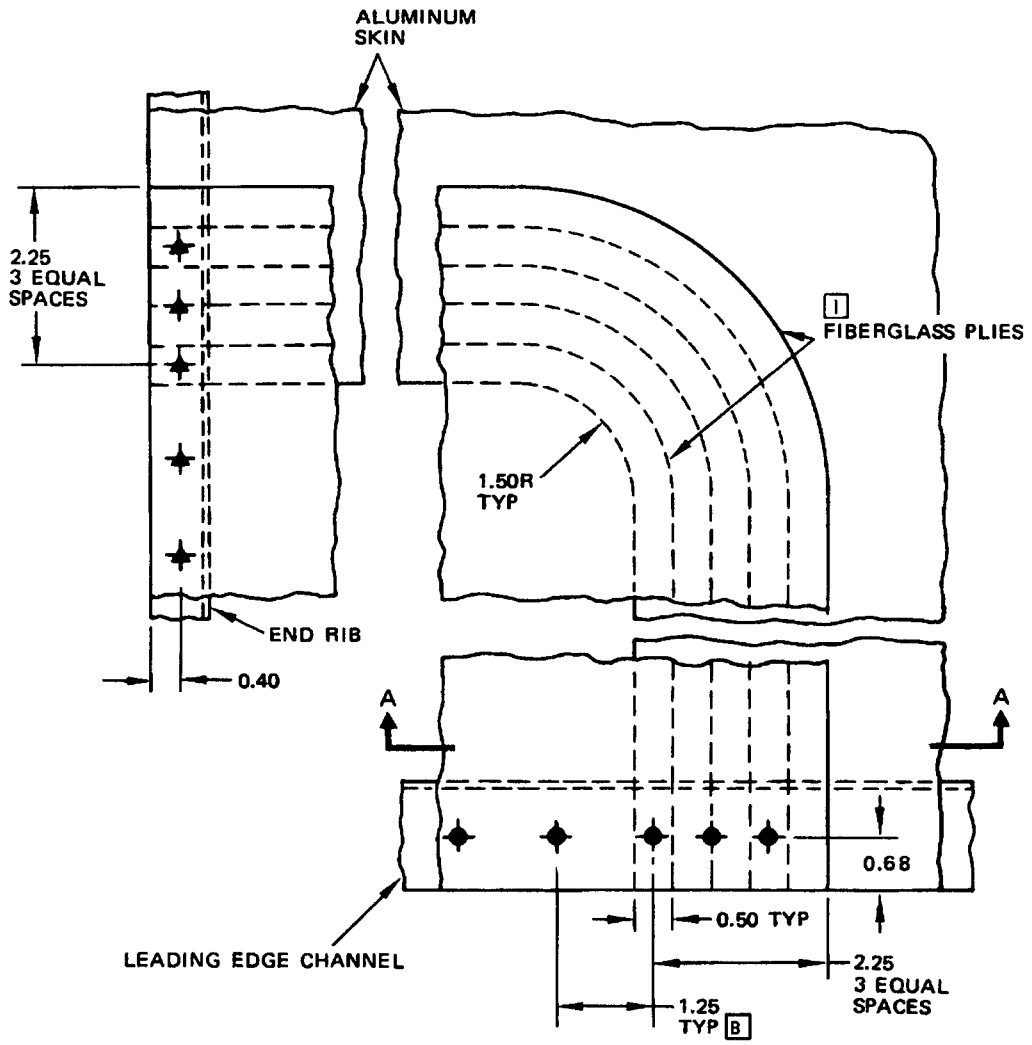

DETAIL I

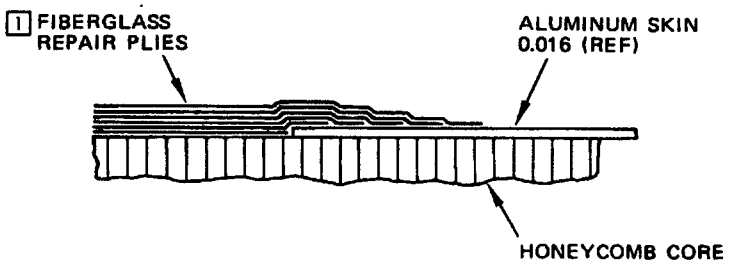

A-A

Partial Skin Repair - Ground Spoilers
Figure 2 (Sheet 6)

BOEING PROPRIETARY - Copyright © - Unpublished Work - See title page for details.

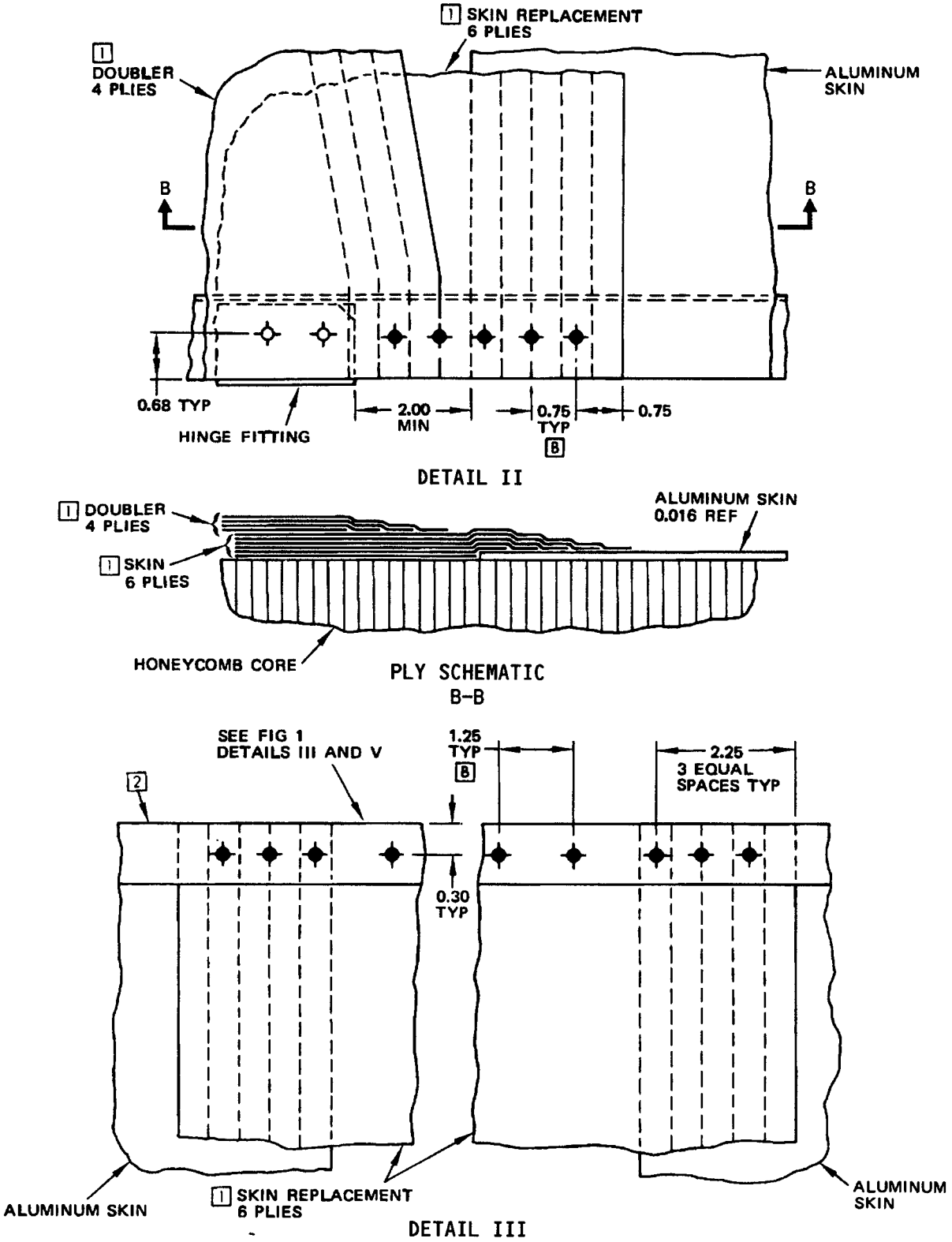

Partial Skin Repair - Ground Spoilers
Figure 2 (Sheet 7)

BOEING PROPRIETARY - Copyright © - Unpublished Work - See title page for details.

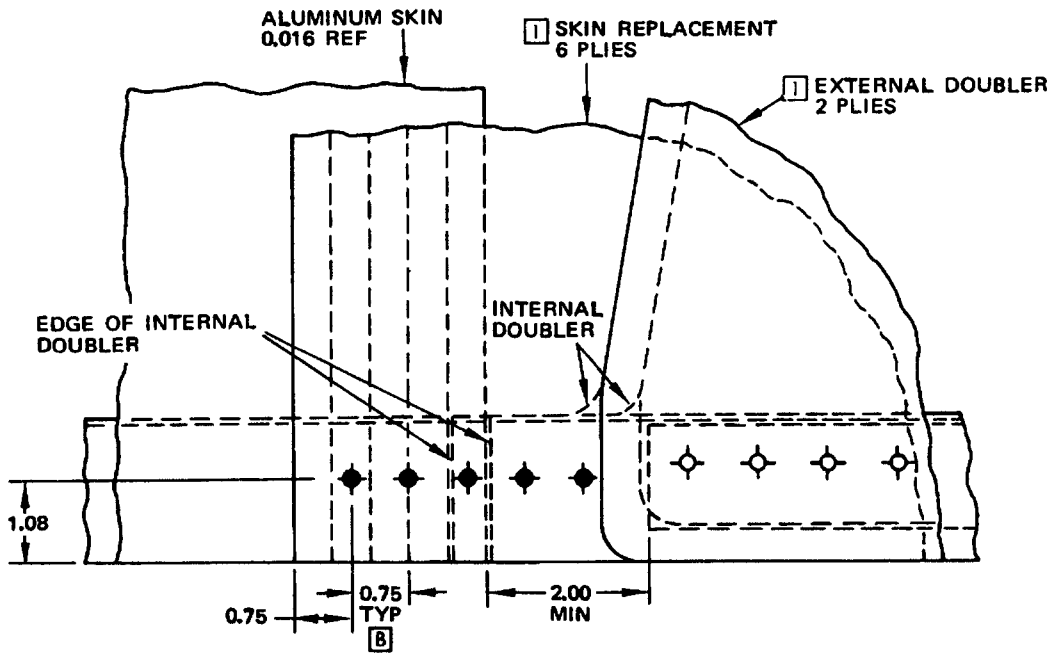

DETAIL IV

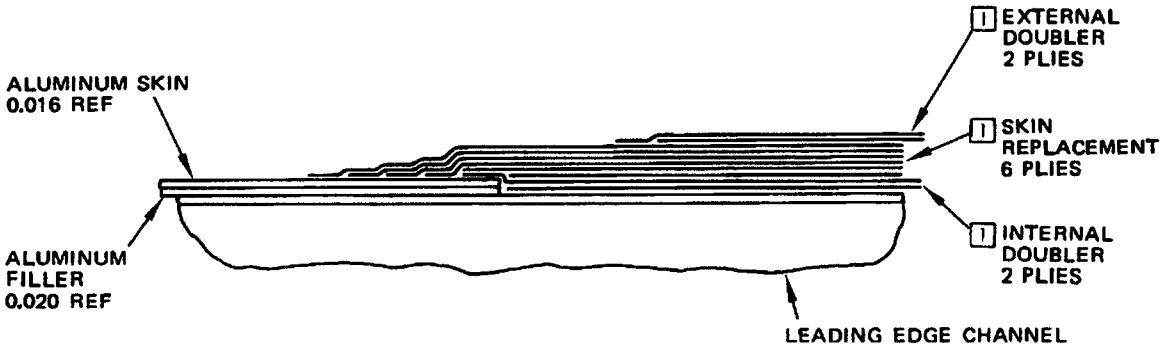

PLY SCHEMATIC ONLY
DETAIL V

Partial Skin Repair - Ground Spoilers
Figure 2 (Sheet 8)

BOEING PROPRIETARY - Copyright © - Unpublished Work - See title page for details.

REPAIR INSTRUCTIONS

CAUTION: IF THE FIBERGLASS SKIN REPAIR IS APPLIED, THEN OVER TIME, A DELAMINATION CAN OCCUR. BOEING RECOMMENDS THAT YOU DO A METAL BONDED REPAIR AS GIVEN IN SRM 51-40-6, PARAGRAPH 11. IF YOU CHOOSE TO DO THE FIBERGLASS SKIN REPAIR, BOEING RECOMMENDS THAT YOU DO INSPECTIONS OF THE REPAIR AREA FOR DELAMINATION. YOU CAN DO THE INSPECTIONS AS PART OF OTHER SCHEDULED MAINTENANCE INTERVALS. IF DELAMINATION DOES OCCUR, REMOVE AND REPLACE THE REPAIR.

1. Removal of Aluminum Skin

   A. Remove all fasteners that pass through the skin.

   B. Start removal of skin at trailing edge of spoiler. Separate the trailing edge bond by driving hardwood wedges between the faying surfaces of the joint as described in 51-40-5.

      NOTE: Dry ice may be used to embrittle the adhesive to provide easier separation of the bonded surfaces.

   C. Peel skin from honeycomb core area taking care to minimize damage to core.

      NOTE: Dry ice may be used to facilitate removal.

      Slitting of the skin into strips may be done to simplify its removal.

   D. Remove aluminum doublers, as required, using wedges and dry ice as described above.

2. Preparation of Damaged Area for Repair

   A. If honeycomb core damage exists, refer to 51-40-6 for repair procedures.

   B. Lightly abrade the exposed adhesive or primer on the exposed edge members of the part using No. 400-grit silicon carbide cloth, Scotch Brite (very fine, Type A) aluminum oxide abrasive cloth or aluminum wool

   C. Abrade the surfaces of any adhesive patches adhering to the honeycomb core after skin removal with 80 grit or finer abrasive paper or cloth. Taper sand the edges of the adhesive areas to a feather edge, fairing it with the surrounding core.

      CAUTION: DO NOT ALLOW SOLVENT TO DRY ON THE CLEANED AREA. WIPE QUICKLY WITH A SEPARATE CLEAN DRY CLOTH.

      WEAR CLEAN COTTON GLOVES WHEN CLEANED SURFACES MUST BE HANDLED.

   D. Wipe the abraded area with a soft clean cloth moistened with MIBK, BMS 11-5, type 1 or trichloroethylene until no trace of foreign material remains.

   E. Apply EC776SR adhesive primer to the edge members per 51-40-6.

3. Preparation of Fiberglass Skin Plies

Skin Repair - Flight Spoilers
Figure 3 (Sheet 1)

A. Cut a piece of fiberglass cloth, part 1, that is large enough for the required number of skin and doubler plies.

NOTE: The fiberglass cloth may be cut into sections which are readily handled size.

B. Cut two pieces of parting film approximately 3 inches larger all around than the fiberglass cloth and tape one piece down to a smooth surface. (Use PVA film or other parting films listed in 51-40-7, Fig. 2.)

C. Prepare resin adhesive, Resin Mix 1, per procedure described in 51-40-9, Fig, 2 and spread enough resin over the taped parting film to impregnate the cloth. The weight of the adhesive required to impregnate the cloth is approximately equal to the weight of the dry fiberglass cloth.

NOTE: The adhesives described in 51-40-6 may be used as alternates for Resin Mix 1. Resin Mix 1 is applicable to fiberglass repairs only.

D. Place the fiberglass cloth over the adhesive.

E. Cover the cloth with the second layer of parting film and press the adhesive through the cloth by working over the parting film with a squeegee or roller to completely impregnate the fiberglass cloth.

F. Cut the impregnated cloth to the required size and shape for each individual skin or doubler ply.

NOTE: Skin plies for complete reskinning of the upper surface should be cut approximately 1-inch oversize.

The parting film on both sides of the cloth decreases edge fraying when cutting the cloth.

G. For upper surface skin repairs lay up skin and doubler plies, as required by the applicable details, on a flat aluminum or steel plate that is free of surface scratches or defects.

NOTE: A suitable parting film or release agent must be applied to the lay up plate.

H. Remove wrinkles and entrapped air by using a squeegee over the parting film that covers each ply.

I. Position damaged part on wet lay up of skin plies and place perforated parting film over skin plies that extend beyond edges of part.

J. Cover entire part with several layers of dry fiberglass cloth or bleeder fabric, making sure it is in complete contact with perforated parting film around edges of part.

Skin Repair - Flight Spoilers
Figure 3 (Sheet 2)

K. For lower skin repairs, lay up skin and doubler plies, as required by the applicable details, directly on the exposed honeycomb core.

L. After laying up last ply, cover the entire surface of the lay up with a perforated parting film and one or two plies of bleeder fabric.

4. Cure of Repair

A. For upper skin repair, vacuum bag entire lay up, sealing vacuum bag material to tooling plate.

NOTE: Allow sufficient excess bag material to permit it to be formed around hinge and actuator fittings when vacuum is applied. Pad any edges or protruding hardware that would puncture bag material with bleeder fabric.

B. For lower skin repair, vacuum bag may be wrapped completely around part and sealed without using a supporting plate. (See NOTE, par. A.)

C. Apply vacuum to bagged part, and maintain a minimum vacuum pressure of 20 inches of mercury during resin cure.

D. Required curing time for Resin Mix 1 is 10 to 12 hours at 70°F.

NOTE: A cured repair is hard and resounds when tapped lightly with a coin or other light metal.

E. Remove vacuum bag, bleeder fabric, and parting films after curing.

NOTE: The repair should be free from pits, blisters, starved areas and excess resin deposits.

F. If repair is applied to upper skin, trim excess fiberglass back to edge of panel and smooth edges with 80 grit or finer abrasive paper or cloth.

5. Finishing of Repair Surface

A. For lower skin:

(1) Lightly abrade the repaired skin with 180 grit or finer abrasive paper or cloth.

(2) Seal surface with Resin Mix 3 prepared per 51-40-9, Fig. 2.

(3) Cure a minimum of 24 hours at 70°F before use.

B. For upper skin:

(1) Lightly abrade the repair surface with 180 grit or finer abrasive paper or cloth.

(2) Remove dust from surface with acetone-moistened cloth and check for defects.

(3) Seal any exposed fibers with Resin Mix 3 prepared per 51-40-9, Fig. 2.

Skin Repair - Flight Spoilers
Figure 3 (Sheet 3)

5. B. (4) Cure a minimum of 24 hours at 70°F before use.

C. Apply pinhole filler, if necessary.

D. Install fasteners as noted on details.

E. Finish per AMM 51-20 including the application of conductive coating.

NOTES

- THIS REPAIR WILL NOT HAVE AN EFFECT ON A STRUCTURALLY SIGNIFICANT ITEM (SSI) GIVEN IN SRM 51-00-4, FIG. 4. THUS, NO CHANGE TO THE SUPPLEMENTAL STRUCTURAL INSPECTION DOCUMENT (SSID) INSPECTION PROGRAM IS NECESSARY.
- THESE REPAIRS APPLY TO FLIGHT SPOILERS ONLY
- USE THESE REPAIRS FOR TOTAL RESKINNING OF UPPER AND/OR LOWER SKINS OF THE SPOILER
- TOTAL RESKINNING OF THE SPOILER IS RECOMMENDED IF THERE ARE MORE THAN THREE SEPARATE REPAIRS REQUIRED OR MORE THAN 60% OF THE TOTAL AREA IS DAMAGED
- REFER TO SRM 51-40-6 FOR ALUMINUM HONEYCOMB PANEL METAL-TO-METAL REPAIRS. YOU CAN USE THESE REPAIR PROCEDURES ON THE ALUMINUM HONEYCOMB SPOILERS, WHERE THEY ARE PERMITTED. THESE REPAIRS ARE PERMITTED, IF THERE IS ADEQUATE SPACE TO INSTALL THE REPAIR PARTS, AND THERE IS NO INTERFERENCEFROM THE ADJACENT STRUCTURE. NO OTHER REPAIR SIZE LIMITS ARE PERMITTED.
- SEE FIG. 4 FOR PARTIAL REPAIR OF FLIGHT SPOILER
- ALL DIMENSIONS SHOWN IN INCHES
- REFER TO THE FOLLOWING WHEN USING THIS REPAIR:
  - SRM 51-10-2 FOR PROTECTIVE TREATMENT OF METAL
  - SRM 51-40-5 FOR BONDED METAL STRUCTURAL REPAIR
  - SRM 51-40-6 FOR ALUMINUM HONEYCOMB STRUCTURAL REPAIRS
  - SRM 51-70 FOR AERODYNAMIC SMOOTHNESS REQUIREMENTS

[A] POT THIS AREA PER PROCEDURES IN SRM 51-40-6

[B] SHAVE DRIVEN HEAD FLUSH WITH SURFACE
+ 0.005
- 0.000

[C] CONDUCTIVE FASTENERS -- INSTALL A MINIMUM OF TWO PER REPAIR, INSTALLED IN AN AREA OF ALUMINUM STRUCTURE. USE RESISTANCE VALUE CHECK PER BAC5117. RESISTANCE NOT TO EXCEED 0.50 OHM BETWEEN FASTENER AND STRUCTURE. RESISTANCE NOT TO EXCEED 300,000 OHM BETWEEN CONDUCTIVE COATING AND FASTENER

[D] EQUAL SPACING

[E] SEAL INSTALLED ON AIRPLANE CUM LINE 280 AND ON

[F] TYPICAL FOR SPOILERS WITH ALUMINUM INSERTS. TYPICAL FOR REPLACEMENT OF UPPER AND/OR LOWER SKINS

[G] TYPICAL FOR SPOILERS WITHOUT INSERTS AT TRAILING EDGE

[H] IF STYLE 181, 1581, OR 7781 FIBERGLASS CLOTH IS NOT AVAILABLE, THREE PLIES OF STYLE 128 OR 1528 CLOTH CAN BE USED INSTEAD OF TWO PLIES OF STYLE 181, 1581 OR 7781.

[J] EXISTING OPTIONAL TACK RIVET. USE LOCATION IF WITHIN 0.25 OF LOCATION SHOWN

[K] NEW FASTENER IN EXISTING LOCATION

Skin Repair - Flight Spoilers
Figure 3 (Sheet 4)

BOEING PROPRIETARY - Copyright © - Unpublished Work - See title page for details.

SYMBOLS

- + CONDUCTIVE FASTENER LOCATION [C]
- ⊕ EXISTING FASTENER LOCATION. TAG OR NOTE FASTENER ON REMOVAL FOR PROPER FASTENER REINSTALLATION
- ✦ MS20426AD5 IN NEW LOCATIONS EXCEPT AS NOTED [J]
- ✦ NAS1739M5 IN NEW LOCATIONS

REPAIR MATERIAL			
	PART	QTY	MATERIAL
[1]	SKIN OR DOUBLER	AS REQD	STYLE 181, 1581 OR 7781 FIBER-GLASS CLOTH VOLAN "A" FINISH [H]
[2]	STRAP	1	0.040 X 1.00 WIDE PHENOLIC STRIP, LAMINATED THERMOSETTING SHEET, COTTON FABRIC, PHENOLIC RESIN MIL-P-15035 TYPE FBM OPTIONAL: TYPE FBE OR FBG

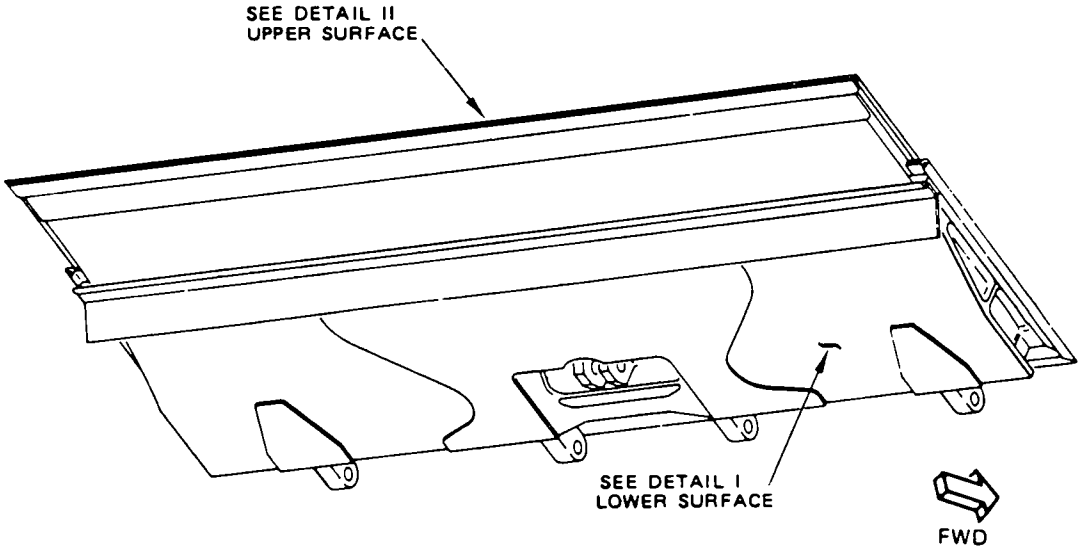

FLIGHT SPOILER
BOTTOM VIEW

Skin Repair - Flight Spoilers
Figure 3 (Sheet 5)

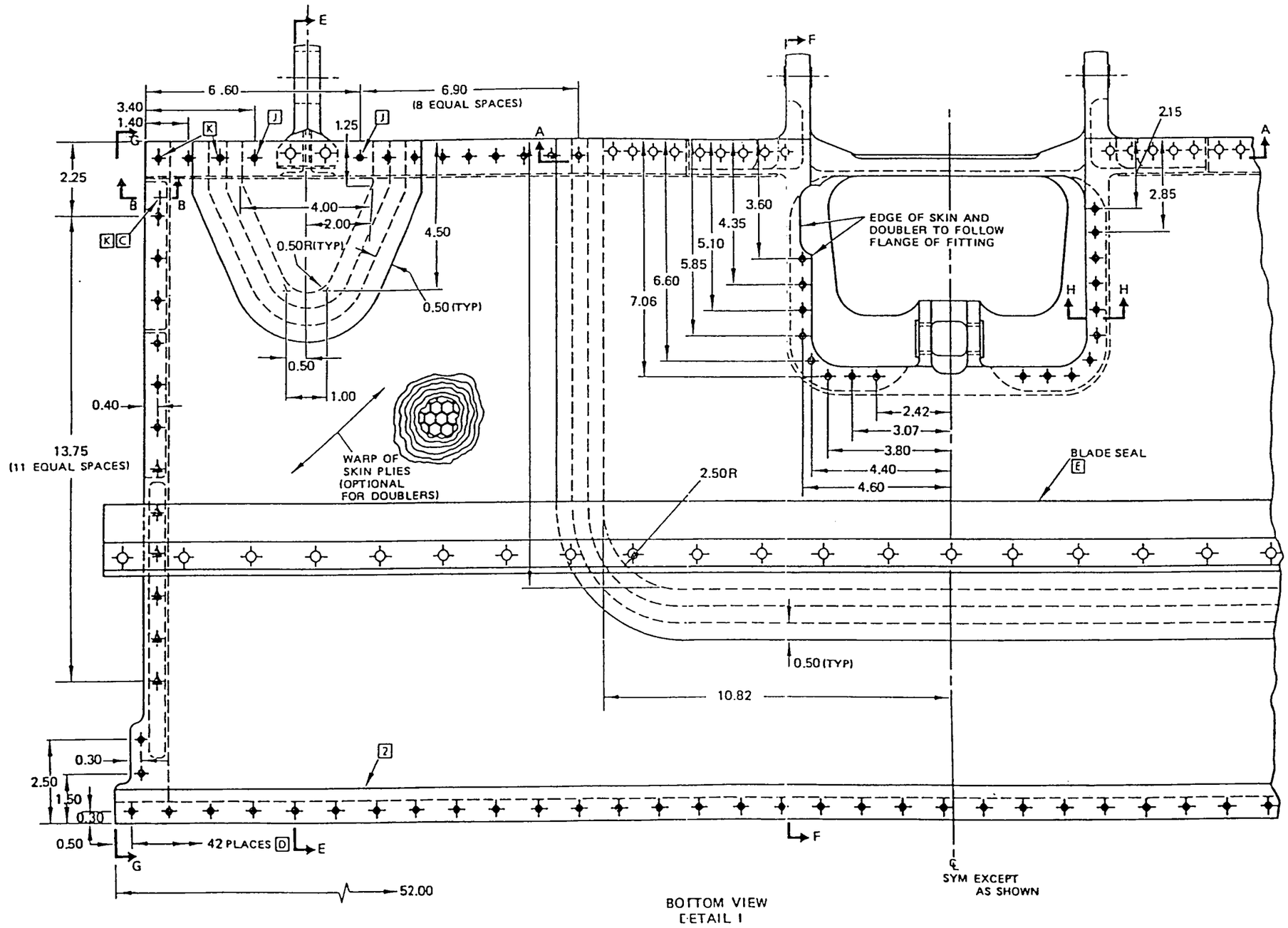

Skin Repair - Flight Spoilers
Figure 3 (Sheet 6)

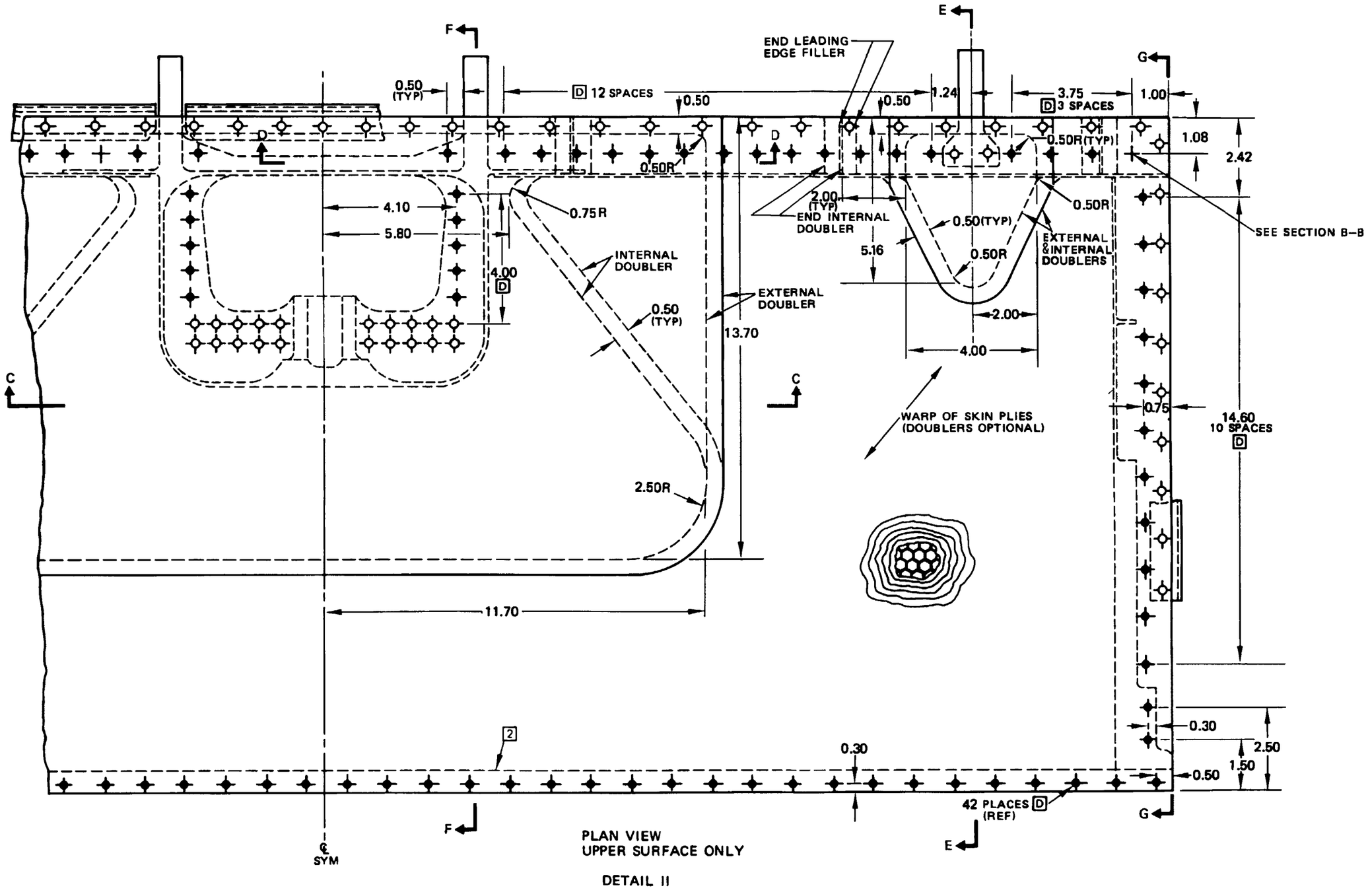

Skin Repair – Flight Spoilers
Figure 3 (Sheet 7)

L19782

 BOEING PROPRIETARY – Copyright © – Unpublished Work – See title page for details.

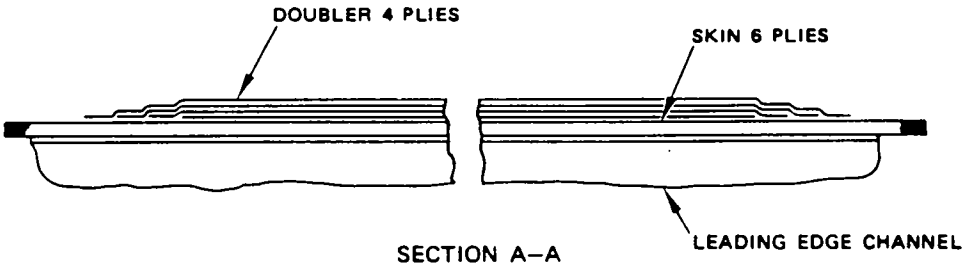

SECTION A–A
(PLY SCHEMATIC ONLY)

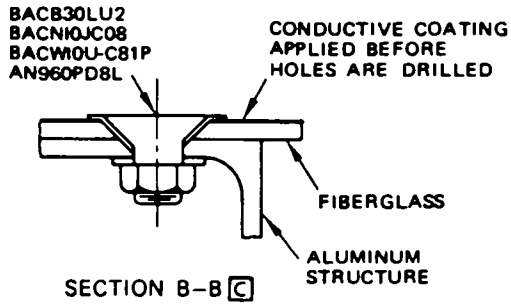

SECTION B–B [C]

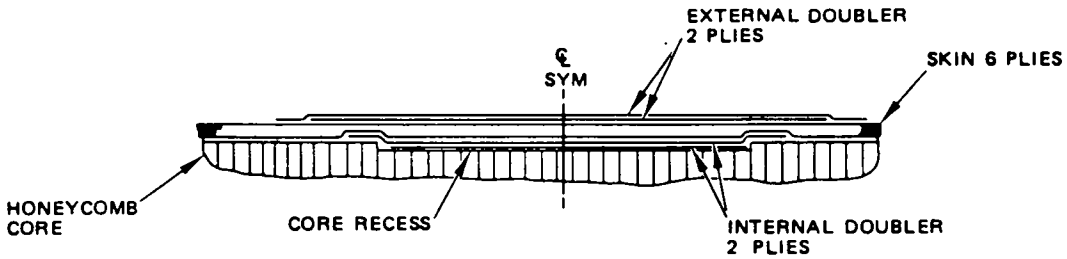

SECTION C–C
(PLY SCHEMATIC ONLY)

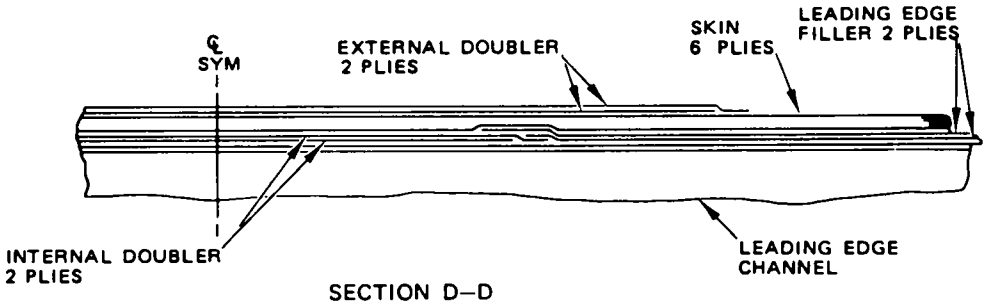

SECTION D–D
(PLY SCHEMATIC ONLY)

Skin Repair - Flight Spoilers
Figure 3 (Sheet 8)

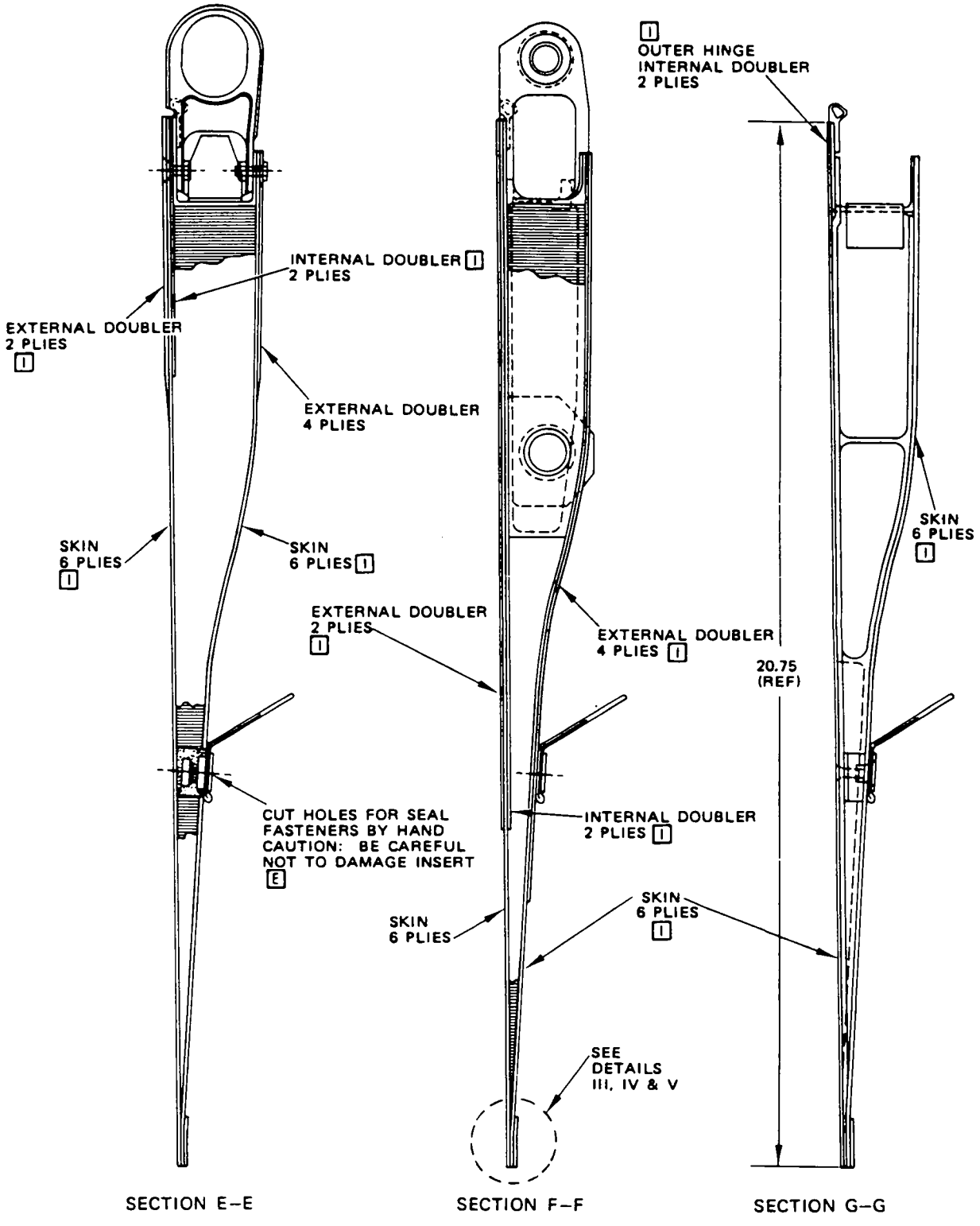

Skin Repairs - Flight Spoilers
Figure 3 (Sheet 9)

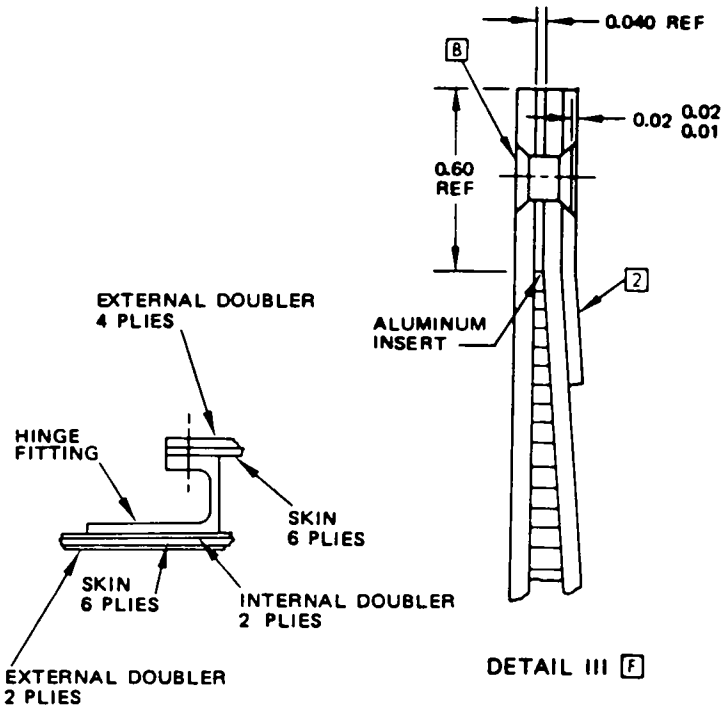

SECTION H–H

DETAIL III F

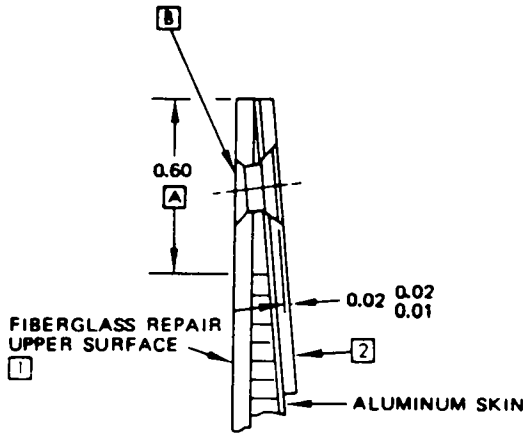

FIBERGLASS REPAIR ON UPPER SURFACE

DETAIL IV G

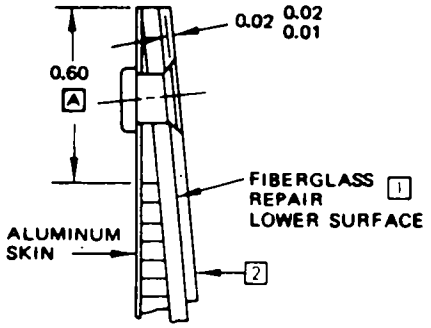

FIBERGLASS REPAIR ON LOWER SURFACE

DETAIL V G

Skin Repairs - Flight Spoilers
Figure 3 (Sheet 10)

REPAIR INSTRUCTIONS

CAUTION: IF THE FIBERGLASS SKIN REPAIR IS APPLIED, THEN OVER TIME, A DELAMINATION CAN OCCUR. BOEING RECOMMENDS THAT YOU DO A METAL BONDED REPAIR AS GIVEN IN SRM 51-40-6, PARAGRAPH 11. IF YOU CHOOSE TO DO THE FIBERGLASS SKIN REPAIR, BOEING RECOMMENDS THAT YOU DO INSPECTIONS OF THE REPAIR AREA FOR DELAMINATION. YOU CAN DO THE INSPECTIONS AS PART OF OTHER SCHEDULED MAINTENANCE INTERVALS. IF DELAMINATION DOES OCCUR, REMOVE AND REPLACE THE REPAIR.

1. Damage Evaluation

   A. Determine the extent of damage, including any area which has been contaminated by the entry of water, oil, fuel, dirt and other foreign substance.

   B check for structural delamination in the vicinity of any damage and at points where loads are concentrated in upper skins.

      NOTE: The extent of delamination which is not always visually apparent, may be determined by tapping the skin with a metallic object such as a coin.

2. Removal of Aluminum Skin

   A. Remove all fasteners that pass through the damage area.

      NOTE: Tag and/or record fasteners removed as to size, type and location so proper fasteners are reinstalled.

   B. Slit skin around edges of delaminated area, taking care not to cut into the honeycomb core.

   C. Peel skin from honeycomb core taking care to minimize damage to core.

      NOTE: Dry ice may be used to embrittle the adhesive to provide easier separation of the bonded surfaces. Slitting of the skin into strips may be done to simplify its removal.

   D. Remove aluminum doublers as required, using Hardwood wedges described in 51-40-5 and dry ice as described above.

3. Preparation of Damaged Area for Repair

   A. If honeycomb core damage exists, repair per 51-40-6

   B. Clean the area of aluminum skin that the fiberglass repair plies will overlap per procedures in 51-40-.

   C. Apply adhesive primer as described in 51-40-6.

4. Preparation of Fiberglass Skin Plies

   A. Cut a piece of fiberglass cloth, part 1, that is large enough for the required number of skin and doubler plies.

   B. Cut two pieces of parting film approximately 3 inches larger all around than the fiberglass cloth and tape one piece down to a smooth surface. (Use PVA film or other parting films listed in 51-40-7, Fig. 2.)

Partial Skin Repair - Flight Spoilers
Figure 4 (Sheet 1)

C. Prepare resin adhesive, Resin Mix 1, per procedure described in 51-40-9, Fig. 2 and spread enough resin over the taped parting film to impregnate the cloth. The weight of the adhesive required to impregnate the cloth is approximately equal to the weight of the dry fiberglass cloth.

NOTE: The adhesives described in 51-40-6 may be used as alternates for Resin Mix 1. Resin Mix 1 is applicable to fiberglass repairs only.

D. Place the fiberglass cloth over the adhesive.

E. Cover the cloth with the second layer of parting film and press the adhesive through the cloth by working over the parting film with a squeegee or roller to completely impregnate the fiberglass cloth.

F. Cut the impregnated cloth to the required size and shape for each individual skin or doubler ply. Cut the smallest skin ply to just fit the exposed core without overlapping the adjacent skin areas.

NOTE: The remaining skin plies of the upper skin repair should be cut to extend approximately one to three inches over the edge of the spoiler repair area.

G. For upper surface skin repairs, lay up skin and doubler plies, as required, by the applicable details, on a flat plate that is free of scratches or other defects.

NOTE: A suitable parting film or release agent must be applied to the lay up plate.

H. Remove wrinkles and entrapped air by using a squeegee over the parting film that covers each ply.

I. Position damaged part on wet lay up and place perforated parting film over the repair plies that extend beyond edges of part.

J. Cover entire part with several layers of dry fiberglass cloth or other bleeder fabric, making sure the fabric is in complete contact with the perforated parting film around edges of part.

K. For lower skin repairs, lay up skin and doubler plies, as required, by the applicable details, directly on the exposed honeycomb core.

Partial Skin Repair - Flight Spoilers
Figure 4 (Sheet 2)

L. After laying up the last ply, cover the entire surface of the lay up with a perforated parting film and one or two plies of bleeder fabric.

NOTE: The area of the part being repaired immediately adjacent to the edge of the fiberglass repair may be coated with a mold release for a width of two to three inches to prevent adhesion of excess resin during cure.

5. Cure of Repair

A. For upper skin repair, vacuum bag entire lay up, sealing vacuum bag material to tooling plate.

NOTE: Allow sufficient excess bag material to permit it to be formed around hinge and actuator fittings when vacuum is applied. Pad any edges or protruding hardware that would puncture bag material with bleeder fabric.

B. For lower skin repair, vacuum bag may be wrapped completely around part and sealed without using a supporting plate. (See NOTE, par. A.)

C. Apply vacuum to bagged part, and maintain a minimum vacuum pressure of 20 inches of mercury during resin cure.

NOTE: Required curing time for Resin Mix 1 is 10 to 12 hours at 70°F. A cured repair is hard and resounds when tapped lightly with a coin or other light metal.

D. Remove vacuum bag, bleeder fabric and parting films after curing.

NOTE: The repair should be free from pits, blisters, starved areas and excess resin deposits.

F. When repair is to upper skin, trim excess fiberglass back to edge of panel and smooth edges with 80 grit or finer abrasive paper or cloth.

6. Finishing of Repair Surface

A. For lower skin:

(1) Lightly abrade the repaired skin with 180 grit or finer abrasive paper or cloth.

(2) Seal surface with Resin Mix 3 prepared per 51-40-9, Fig. 2.

(3) Cure a minimum of 24 hours at 70°F before use.

Partial Skin Repair - Flight Spoilers
Figure 4 (Sheet 3)

REPAIR INSTRUCTIONS (CONT)

B. For upper skin:

(1) Lightly abrade the repair surface with 180 grit or finer abrasive paper or cloth.

(2) Remove dust from the surface with acetone-moistened cloth and check for defects.

(3) Seal any exposed fibers with Resin Mix 3 prepared as given in SRM 51-40-9, Fig. 2.

(4) Cure a minimum of 24 hours at 70°F before use.

C. Apply the pinhole filler, if necessary.

D. Install the fasteners as noted on the details.

E. Apply the finish as given in AMM 51-20, to include the conductive coating.

NOTES

- THESE REPAIRS WILL NOT HAVE AN EFFECT ON A STRUCTURALLY SIGNIFICANT ITEM (SSI) GIVEN IN SRM 51-00-4, FIG. 3. THUS, NO CHANGE TO THE SUPPLEMENTAL STRUCTURAL INSPECTION DOCUMENT (SSID) INSPECTION PROGRAM IS NECESSARY.
- THESE REPAIRS APPLY TO FLIGHT SPOILERS ONLY.
- USE THESE REPAIRS FOR PARTIAL RESKINNING OF UPPER AND/OR LOWER SKINS OF THE SPOILER.
- TOTAL RESKINNING OF THE SPOILER IS RECOMMENDED IF THERE ARE MORE THAN THREE SEPARATE REPAIRS NECESSARY OR MORE THAN 60% OF THE TOTAL AREA IS DAMAGED (FIG. 3).
- ALL DIMENSIONS SHOWN IN INCHES.
- WHEN YOU DO THIS REPAIR, REFER TO:
  - SRM 51-10-2 FOR PROTECTIVE TREATMENT OF METAL
  - SRM 51-40-5 FOR BONDED METAL STRUCTURAL REPAIR
  - SRM 51-40-6 FOR ALUMINUM HONEYCOMB STRUCTURAL REPAIRS
  - SRM 51-70 FOR AERODYNAMIC SMOOTHNESS REQUIREMENTS.

[A] THE REPAIRS SHOWN ARE ONLY EXAMPLES OF POSSIBLE CONFIGURATIONS. ACTUAL REPAIRS CAN BE ANY SIZE AND SHAPE WITHIN THE LIMITS SPECIFIED.

Partial Skin Repair - Flight Spoilers
Figure 4 (Sheet 4)

BOEING PROPRIETARY - Copyright © - Unpublished Work - See title page for details.

NOTES (CONTINUED)

[B] LOCATION OF RIVETS ON PARTIAL REPAIRS WILL VARY WITH SIZE AND SHAPE OF REPAIR. IN AREA OF OVERLAPPING PLIES USE 0.75 INCH SPACING AND 1.25 INCH SPACING IN OTHER AREAS

[C] INDIVIDUAL DAMAGE AREAS OCCURRING WITHIN 6.00 INCH OF EACH OTHER SHOULD BE TREATED AS ONE REPAIR

[D] REPAIR SIZE SHALL NOT BE LESS THAN SHOWN IN THIS AREA

[E] IF DAMAGE OCCURS WITHIN 5.00 INCHES OF AN EDGE, REPAIR SHOULD BE EXTENDED TO THAT EDGE

[F] IF STYLE 181, 1581 OR 7781 FIBERGLASS IS NOT AVAILABLE, THREE PLIES OF STYLE 128 OR 1528 CLOTH CAN BE USED INSTEAD OR TWO PLIES OF 181, 1581 OR 7781

SYMBOLS

⊕ EXISTING FASTENER LOCATION. TAG OR NOTE FASTENER ON REMOVAL FOR PROPER FASTENER REINSTALLATION

✦ MS20426AD5 IN NEW LOCATIONS

✦ NAS1739M5 IN NEW LOCATIONS

REPAIR MATERIAL			
	PART	QTY	MATERIAL
[1]	SKIN OR DOUBLER	AS REQD	STYLE 181, 1581 OR 7781 FIBERGLASS CLOTH VOLAN "A" FINISH [F]
[2]	STRAP	1	0.040 X 1.00 WIDE PHENOLIC STRIP, LAMINATED THERMOSETTING SHEET, COTTON FABRIC, PHENOLIC RESIN MIL-P-15035 TYPE FBM OPTIONAL: TYPE FBE OR FBG

Partial Skin Repair - Flight Spoilers
Figure 4 (Sheet 5)

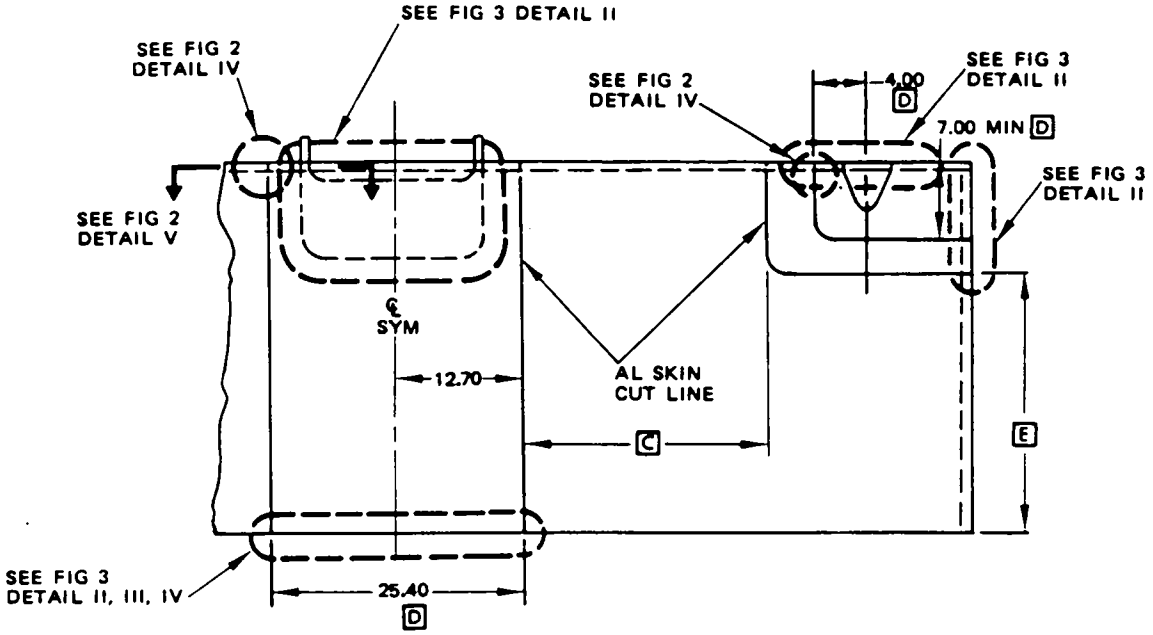

PLAN VIEW A

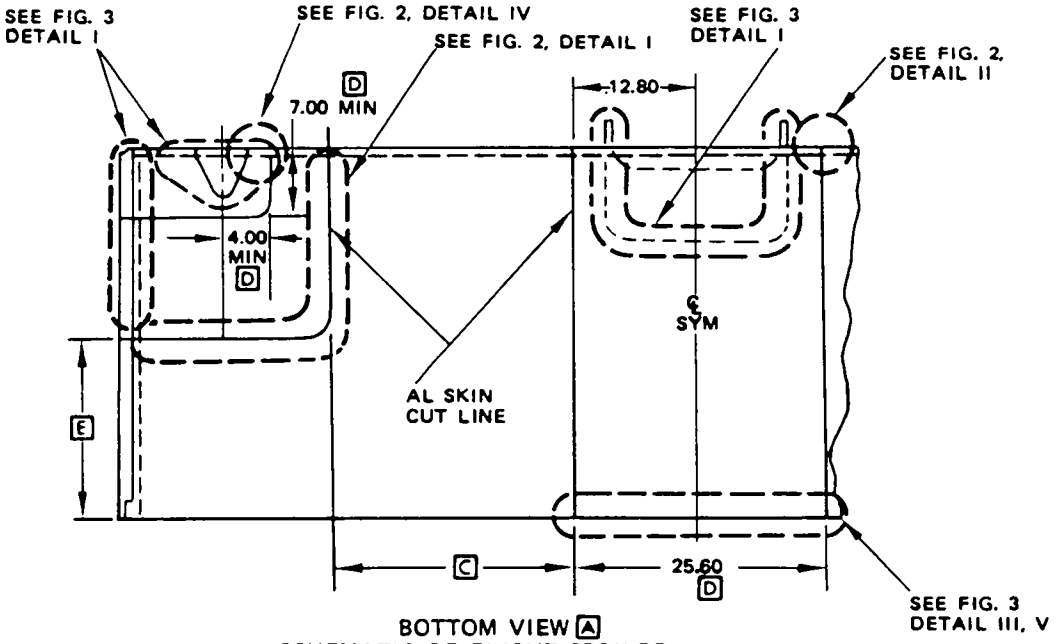

BOTTOM VIEW A
SCHEMATIC OF FLIGHT SPOILER
SHOWING REPAIR LOCATIONS

Partial Skin Repair - Flight Spoilers
Figure 4 (Sheet 6)

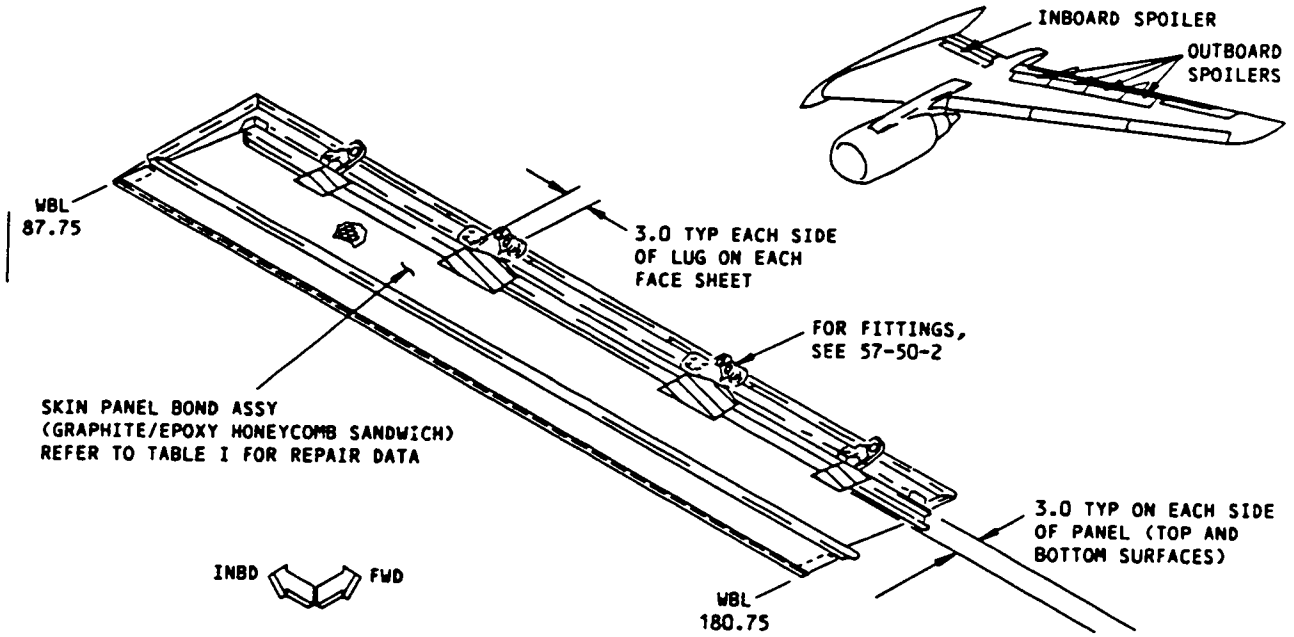

LOWER SURFACE SHOWN
INBOARD SPOILER

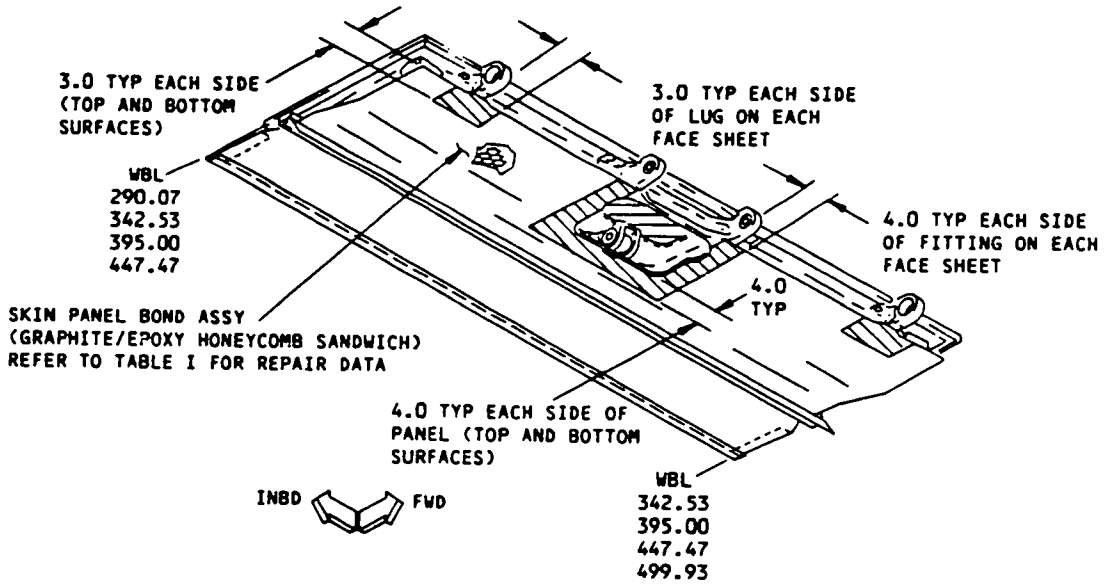

CRITICAL AREAS (SHADED) CONTACT THE BOEING COMPANY FOR REPAIR INFORMATION

LOWER SURFACE SHOWN
OUTBOARD SPOILERS

Spoiler Skin Repair (Graphite Composite Spoilers)
Figure 5 (Sheet 1)

DAMAGE	INTERIM REPAIRS [B]	PERMANENT REPAIRS	
	WET LAYUP 150°F CURE (51-40-12)	WET LAYUP 200°F CURE (51-40-15)	250°F CURE (51-40-13)
HOLES	3.0 INCH MAXIMUM DIAMETER NOT TO BE MORE THAN 30% OF SMALLEST DIMENSION ACROSS HONEYCOMB PANEL AT THE DAMAGE LOCATION. REPAIR AS GIVEN IN SRM 51-40-12, REPAIR 14. [A]	6.0 INCH MAXIMUM DIAMETER NOT TO BE MORE THAN 50% OF OF SMALLEST DIMENSION ACROSS HONEYCOMB PANEL AT THE DAMAGE LOCATION. USE TWO EXTRA PLIES PER FACESHEET REPAIRED. [C]	6.0 INCH MAXIMUM DIAMETER NOT TO BE MORE THAN 50% OF OF SMALLEST DIMENSION ACROSS HONEYCOMB PANEL AT THE DAMAGE LOCATION. USE TWO EXTRA PLIES PER FACESHEET REPAIRED. [C]
CRACKS	UP TO 3.0 INCH LONG, REPAIR AS GIVEN IN SRM 51-40-12, REPAIR 14. [A]	USE SAME LIMITS AND REQUIREMENTS AS FOR HOLES.	
DELAMI-NATION	USE SAME LIMITS AS FOR HOLES AND REPAIR AS GIVEN IN SRM 51-40-12, REPAIR 14. [A]	USE SAME LIMITS AND REQUIREMENTS AS FOR HOLES.	
NICKS AND GOUGES	IF FIBER DAMAGE OR DELAMINATION EXISTS, USE SAME LIMITS AS FOR HOLES AND REPAIR AS GIVEN IN SRM 51-40-12, REPAIR 14. [A]	IF THERE IS NO FIBER DAMAGE OR DELAMINATION, FILL NICKS OR GOUGES AS GIVEN IN SRM 51-40-12. IF FIBER DAMAGE OR DELAMINATION EXISTS, USE SAME LIMITS AND REQUIREMENTS AS FOR HOLES.	
DENTS	USE SAME LIMITS AS FOR HOLES AND REPAIR AS GIVEN IN SRM 51-40-12, REPAIR 14. [A]	USE SAME LIMITS AND REQUIREMENTS AS FOR HOLES.	

REPAIR DATA FOR 350°F CURE HONEYCOMB PANELS

TABLE I

NOTES

- THESE REPAIRS WILL NOT HAVE AN EFFECT ON A STRUCTURALLY SIGNIFICANT ITEM (SSI) GIVEN IN SRM 51-00-4, FIG. 3. THUS, NO CHANGE TO THE SUPPLEMENTAL STRUCTURAL INSPECTION DOCUMENT (SSID) INSPECTION PROGRAM IS NECESSARY.
- REFER TO SRM 51-10 FOR INVESTIGATION AND CLEANUP OF DAMAGE.
- REFINISH REWORKED AREAS AS GIVEN IN AMM 51-20.
- REFER TO SRM 51-70 FOR AERODYNAMIC SMOOTHNESS REQUIREMENTS. WHERE THE DAMAGE EXCEEDS THE LIMITS SHOWN IN SRM 51-70, CONSIDERATION SHOULD BE GIVEN TO THE LOSS OF PERFORMANCE INVOLVED.
- WHERE NO REPAIR IS SPECIFIED, USE THE REPAIR INDEX IN THE APPROPRIATE REPAIR SECTION OF SRM 51-40 TO DETERMINE THE REPAIR TO BE USED.

[A] LIMITED TO REPAIR OF DAMAGE TO ONE FACESHEET SKIN AND HONEYCOMB CORE. ONE REPAIR FOR EACH SQUARE FOOT OF AREA AND MINIMUM OF 6.0 INCHES (EDGE TO EDGE) FROM ANY OTHER DAMAGE (ON EITHER SIDE OF PANEL), FASTENER HOLE, OR EDGE OF PANEL.

[B] INSPECT INTERIM REPAIR USING NDI METHODS AS GIVEN IN SRM 51-40-12 EVERY AIRPLANE "2A" CHECK. PERMANENT REPAIR IS REQUIRED IF ANY DETERIORATION IS EVIDENT. THESE REPAIRS HAVE FAA APPROVAL CONTINGENT ON ACCOMPLISHMENT OF THE INSPECTIONS AT THE REQUIRED INTERVALS.

[C] ONE REPAIR FOR EACH SQUARE FOOT OF AREA AND A MINIMUM OF 6.0 INCHES (EDGE TO EDGE) FROM ANY OTHER DAMAGE (OR EITHER SIDE OF PANEL), FASTENER HOLE, OR EDGE OF PANEL.

Spoiler Skin Repair (Graphite Composite Spoilers)
Figure 5 (Sheet 2)

BOEING PROPRIETARY - Copyright © - Unpublished Work - See title page for details.

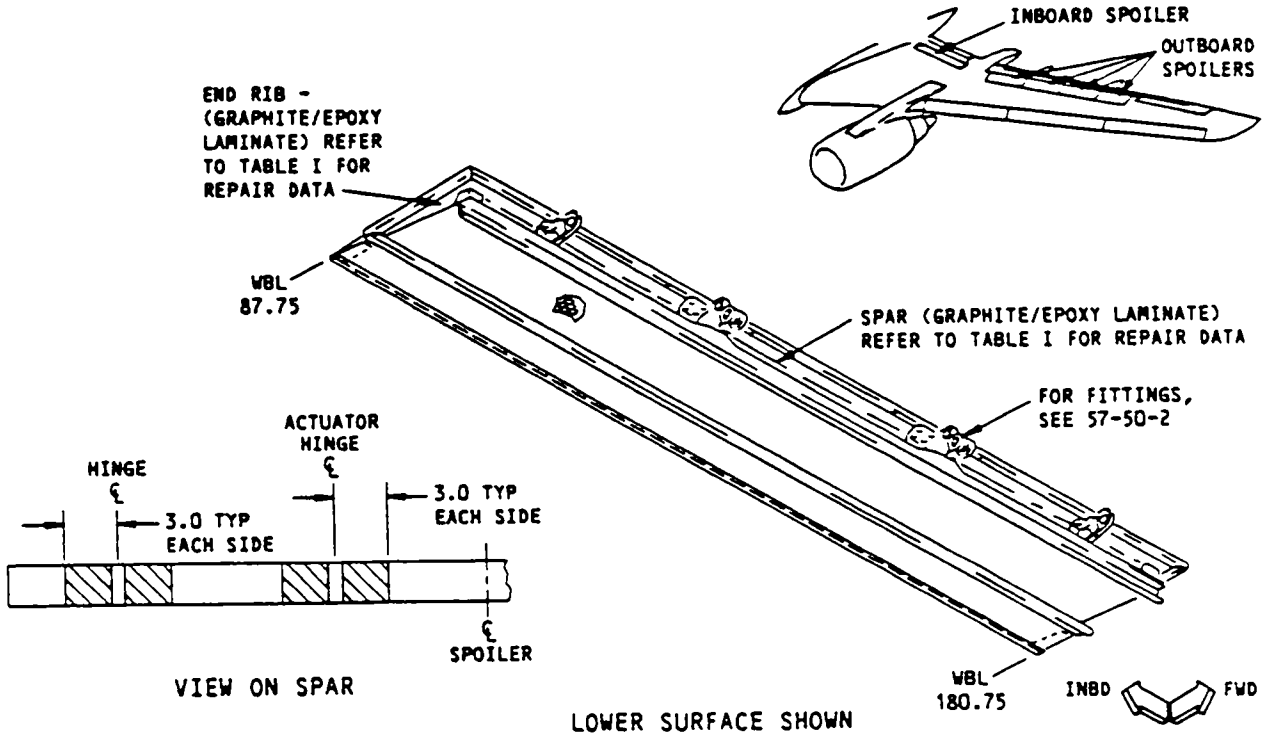

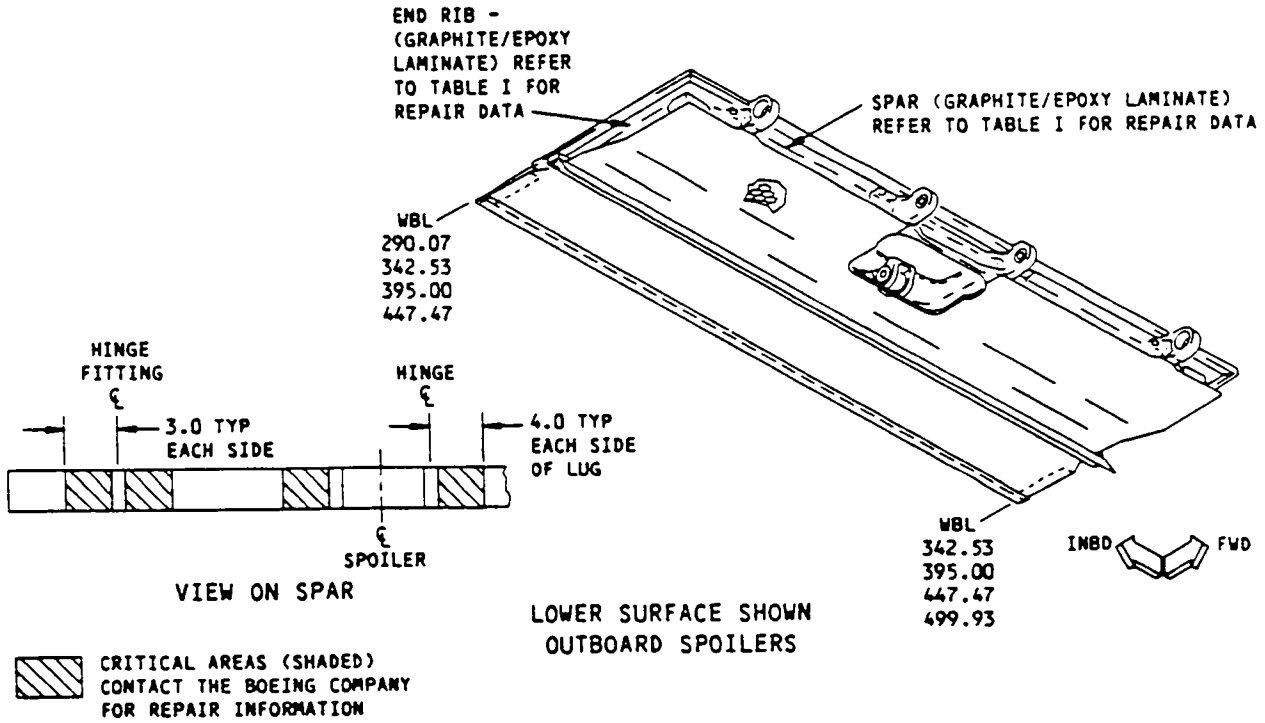

Spoiler Structure Repair (Graphite Composite Spoilers)
Figure 6 (Sheet 1)

136653

DAMAGE	INTERIM REPAIRS [B]	PERMANENT REPAIRS		
	WET LAYUP 150°F CURE (51-40-12)	WET LAYUP 250°F CURE (51-40-15)	250°F CURE (51-40-13)	350°F CURE (51-40-14)
HOLES	1.5 INCH MAXIMUM DIAMETER MUST NOT BE MORE THAN 30% OF SMALLEST DIMENSION ACROSS LAMINATE PANEL AT THE DAMAGE LOCATION. REPAIR AS GIVEN IN SRM 51-40-12, REPAIR 14. [A]	3.0 INCH MAXIMUM DIAMETER MUST NOT BE MORE THAN 50% OF SMALLEST DIMENSION ACROSS LAMINATE PANEL AT THE DAMAGE LOCATION. USE TWO EXTRA PLIES PER SIDE. [A]	3.0 INCH MAXIMUM DIAMETER MUST NOT BE MORE THAN 50% OF SMALLEST DIMENSION ACROSS LAMINATE PANEL AT THE DAMAGE LOCATION. USE TWO EXTRA PLIES PER SIDE.	NO SIZE LIMIT
CRACKS	UP TO 3.0 INCHES LONG, REPAIR AS GIVEN IN SRM 51-40-12, REPAIR 14. [A]	USE SAME LIMITS AND REQUIREMENTS AS FOR HOLES.		
DELAMI-NATION	USE SAME LIMITS AS FOR HOLES AND REPAIR AS GIVEN IN SRM 51-40-12, REPAIR 14. [A]	USE SAME LIMITS AND REQUIREMENTS AS FOR HOLES.		
NICKS AND GOUGES	IF FIBER DAMAGE OR DELAMINATION EXISTS, USE SAME LIMITS AS FOR HOLES AND REPAIR AS GIVEN IN SRM 51-40-12, REPAIR 14. [A]	IF THERE IS NO FIBER DAMAGE OR DELAMINATION, FILL NICKS OR GOUGES AS GIVEN IN SRM 51-40-12. IF FIBER DAMAGE OR DELAMINATION EXISTS, USE SAME LIMITS AND REQUIREMENTS AS FOR HOLES.		
DENTS	USE SAME LIMITS AS FOR HOLES AND REPAIR AS GIVEN IN SRM 51-40-12, REPAIR 14. [A]	USE SAME LIMITS AND REQUIREMENTS AS FOR HOLES.		

REPAIR DATA FOR 350°F CURE LAMINATES
TABLE I

NOTES

- THESE REPAIRS WILL NOT HAVE AN EFFECT ON A STRUCTURALLY SIGNIFICANT ITEM (SSI) GIVEN IN SRM 51-00-4, FIG. 3. THUS, NO CHANGE TO THE SUPPLEMENTAL STRUCTURAL INSPECTION DOCUMENT (SSID) INSPECTION PROGRAM IS NECESSARY.
- REFER TO SRM 51-10 FOR INVESTIGATION AND CLEANUP OF DAMAGE.
- REFINISH REWORKED AREAS AS GIVEN IN AMM 51-20.
- REFER TO SRM 51-70 FOR AERODYNAMIC SMOOTHNESS REQUIREMENTS. WHERE THE DAMAGE EXCEEDS THE LIMITS SHOWN IN SRM 51-70, CONSIDERATIONSHOULD BE GIVEN TO THE LOSS OF PERFORMANCE INVOLVED.
- WHERE NO REPAIR IS SPECIFIED, USE THE REPAIR INDEX IN THE APPROPRIATE REPAIR SECTION OF SRM 51-40 TO DETERMINE THE REPAIR TO BE USED.

[A] ONE REPAIR PER SQUARE FOOT OF AREA AND A MINIMUM OF 3.0 INCHES (EDGE TO EDGE) FROM ANY OTHER DAMAGE (ON EITHER SIDE OF PART), FASTENER HOLE, OR EDGE OF PART

[B] INSPECT INTERIM REPAIR USING NDI METHODS AS GIVEN IN SRM 51-40-12 EVERY AIRPLANE "2A" CHECK. PERMANENT REPAIR IS REQUIRED IF ANY DETERIORATION IS EVIDENT. THESE REPAIRS HAVE FAA APPROVAL CONTINGENT ON ACCOMPLISHMENT OF THE INSPECTIONS AT THE REQUIRED INTERVALS.

Spoiler Structure Repair (Graphite Composite Spoilers)
Figure 6 (Sheet 2)

BOEING PROPRIETARY - Copyright © - Unpublished Work - See title page for details.

APPLICABILITY

THIS REPAIR IS APPLICABLE TO THE UPPER SKIN OF A GRAPHITE COMPOSITE SPOILER WHICH HAS ANY ONE DAMAGE TYPE OR A COMBINATION OF DAMAGE TYPES WHICH FOLLOW:
- BUCKLED UPPER SKIN
- DELAMINATION BETWEEN SKIN PLIES
- HOLES OR PUNCTURES
- DELAMINATION BETWEEN SKIN AND THE FITTING SUBJECT TO THE LIMITS GIVEN IN THIS REPAIR.

REPAIR INSTRUCTIONS

1. Before you start the repair, make an inspection of the graphite skin for damage. Find the extent of any delamination between the upper skin and the hinge fitting. Refer to NDT Part 4, 51-40-00.
2. Remove moisture from the damaged area. Refer to SRM 51-40-15.
3. If the skin plies are delaminated or there are holes or punctures in the skin, make a repair of the graphite skin. Refer to 51-40-15. Inject BMS 8-301 into the damage area and cure the resin. Refer to SRM 51-40-15, Fig. 2 and 8.
4. Make the surface of the graphite skin lightly rough in the repair location. Do not damage the fibers of the top ply.
5. Apply one layer of BMS 10-79, Type III primer to the repair area of the spoiler skin.
6. Make the repair plate. See Detail I and Table I.
7. Put the repair plate on the spoiler and drill the fastener holes.
8. Remove the repair plate.
9. Remove the nicks, scratches, gouges, burrs, and sharp edges of the hinge fitting.
10. Apply a chemical conversion coating to the bare edges of the hinge fitting. Refer to SRM 51-10-2.
11. Make the surfaces of the cres or titanium repair plate rough, if either of those is used. Refer to SRM 51-10-2. [A]
12. Apply two layers of BMS 10-79, Type III primer to the cres repair plate. Apply one layer of BMS 10-79, Type III primer to the graphite or titanium repair plates if one of those is used. Refer to SOPM 20-44-04.
13. If there is a delamination between the skin and the hinge fitting, clean out the delamination surfaces. Inject BMS 5-95 sealant into the delaminated area. Clamp the skin to the hinge fitting until the sealant is cured.

    NOTE: The repair fasteners can be used to give the clamp pressure.
14. Install the repair plate with BMS 5-95 sealant between the mating surfaces. Install the nonaluminum fasteners wet with BMS 5-95 sealant. Refer to SRM 51-20-4.
15. Apply BMS 5-95 sealant:
    - Around the edge of the repair plate
    - To the edges of the hinge fitting
    - Over the nuts and washers.
16. Apply the finish to the repair area. Refer to AMM 51-21.

NOTES

- THIS REPAIR WILL NOT HAVE AN EFFECT ON A STRUCTURALLY SIGNIFICANT ITEM (SSI) GIVEN IN SRM 51-00-4, FIG. 3. THUS, NO CHANGE TO THE SUPPLEMENTAL STRUCTURAL INSPECTION DOCUMENT (SSID) INSPECTION PROGRAM IS NECESSARY.
- WHEN YOU USE THIS REPAIR, REFER TO:
  - AMM 51-21 FOR INTERIOR AND EXTERIOR FINISHES
  - NDT PART 4, 51-40-00 FOR BONDLINE DELAMINATION INSPECTION IN NON-METAL LAMINATES
  - SOPM 20-44-04 FOR THE APPLICATION OF CHEMICAL AND SOLVENT RESISTANT FINISHES
  - SRM 51-10-1 FOR DAMAGE CLASSIFICATION
  - SRM 51-10-2 FOR PROTECTIVE TREATMENT OF METAL
  - SRM 51-20-4 FOR REPAIR SEALING
  - SRM 51-30 FOR FASTENER CODE, REMOVAL, INSTALLATION, HOLE SIZES, AND EDGE MARGINS
  - SRM 51-40-13 OR SRM 51-40-14 FOR RESIN SPECIFICATION AND MIXING PROCEDURES
  - SRM 51-40-15 FOR THE REMOVAL OF MOISTURE FROM THE DAMAGED AREA AND FOR RESIN SPECIFICATION AND MIXING PROCEDURES
  - SRM 51-70 FOR AERODYNAMIC SMOOTHNESS.

[A] OPTIONAL REPAIR PLATE MATERIALS:
- 0.050 OR 0.063 INCH THICK Ti-6AL-4V TITANIUM SHEET
- GRAPHITE PREPREG LAMINATE 350°F CURE WHICH CONSISTS OF 10 PLIES OF BMS 8-212 OR BMS 8-256, 3K-70-PW. LAYUP SEQUENCE: 0/90,±45,0/90,±45,0/90,0/90,±45,0/90,±45, 0/90. REFER TO SRM 51-40-14 FOR CURE PROCEDURES.
- GRAPHITE PREPREG LAMINATE 250°F CURE WHICH CONSISTS OF 10 PLIES OF BMS 8-168, 3K-70-PW. LAYUP SEQUENCE:0/90,±45,0/90, ±45,0/90,0/90,±45,0/90,±45,0/90. REFER TO SRM 51-40-13 FOR CURE PROCEDURES.

[B] TELL THE BOEING COMPANY IF THE WIDTH OF THE BOND BETWEEN THE EDGE OF THE DELAMINATION AND THE HONEYCOMB CORE IS LESS THAN 0.50 INCH.

Graphite Spoiler Upper Skin Repair at Hinge Fitting
Figure 7 (Sheet 1)

BOEING PROPRIETARY - Copyright © - Unpublished Work - See title page for details.

NOTES (CONTINUED)

[C] NUTS INSTALLED IN THE AREA OF THE ACTUATOR PIN CAN PREVENT ITS REINSTALLATION. IT IS PERMITTED TO SUBSTITUTE NAS1200M6-7 MONEL RIVETS, IN PLACE OF THE REPAIR FASTENERS GIVEN, FOR INSTALLATION IN THE ACTUATOR PIN LOCATION.

FASTENER SYMBOLS

REFERENCE FASTENER LOCATION.

REPAIR FASTENER LOCATION. INSTALL A BACB30VF3K3 FLUSH HEAD BOLT WITH A NAS1149E0363R WASHER AND A BACN10YR3CD NUT. AS AN ALTERNATIVE, INSTALL A BACB30LL3-3 BOLT OR A NAS8703-3 BOLT WITH A BACN10JC3CD NUT. IT IS ALSO PERMITTED TO INSTALL A NAS1200M6-7 MONEL RIVET. [C]

REPAIR MATERIAL			
PART		QTY	MATERIAL
1	REPAIR PLATE	1	0.050 OR 0.063 CRES 301 1/2 HARD SHEET [A]

TABLE I

Graphite Spoiler Upper Skin Repair at Hinge Fitting
Figure 7 (Sheet 2)

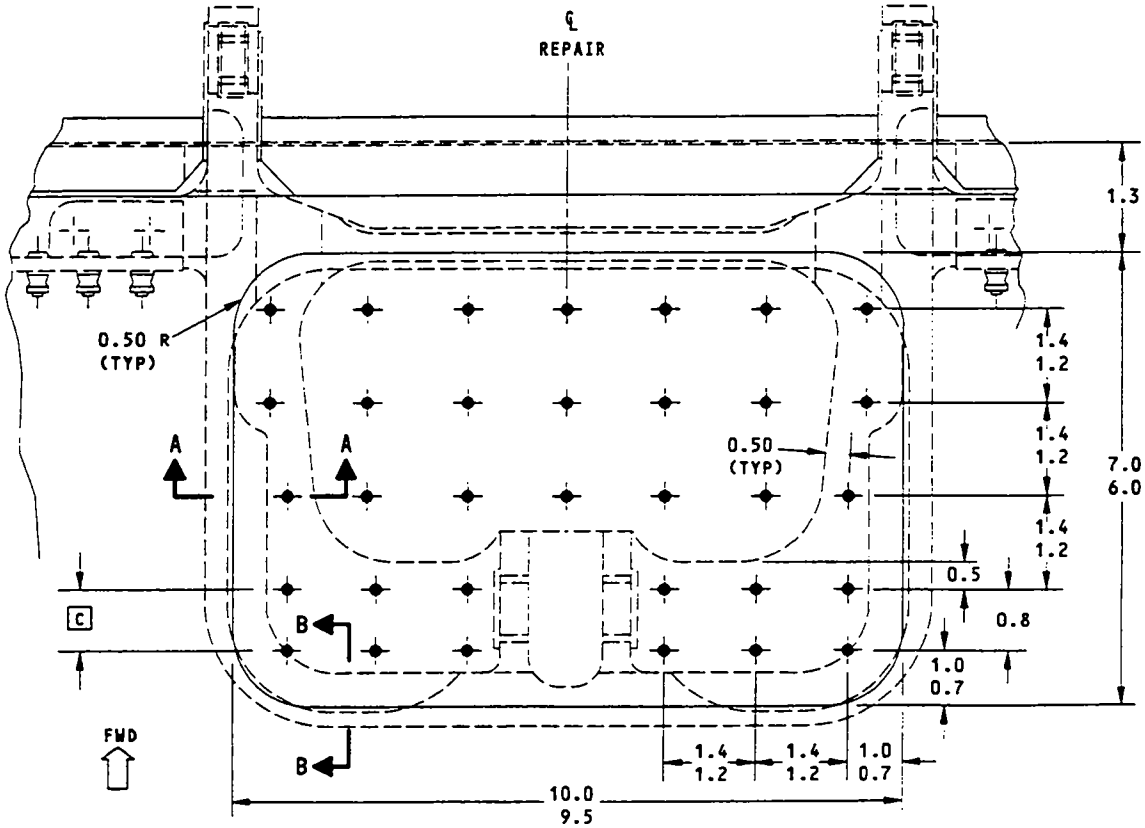

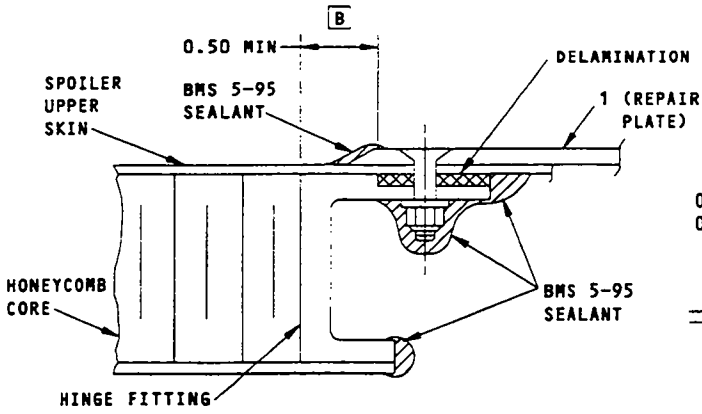

SECTION A-A

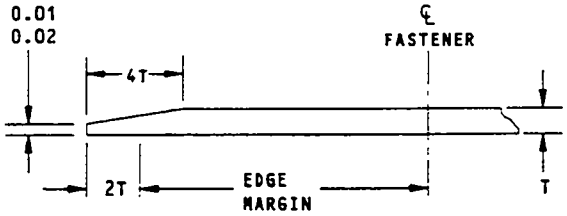

SECTION B-B
(TYP ALL EDGES)

DETAIL I

Graphite Spoiler Upper Skin Repair at Hinge Fitting
Figure 7 (Sheet 3)

A57734

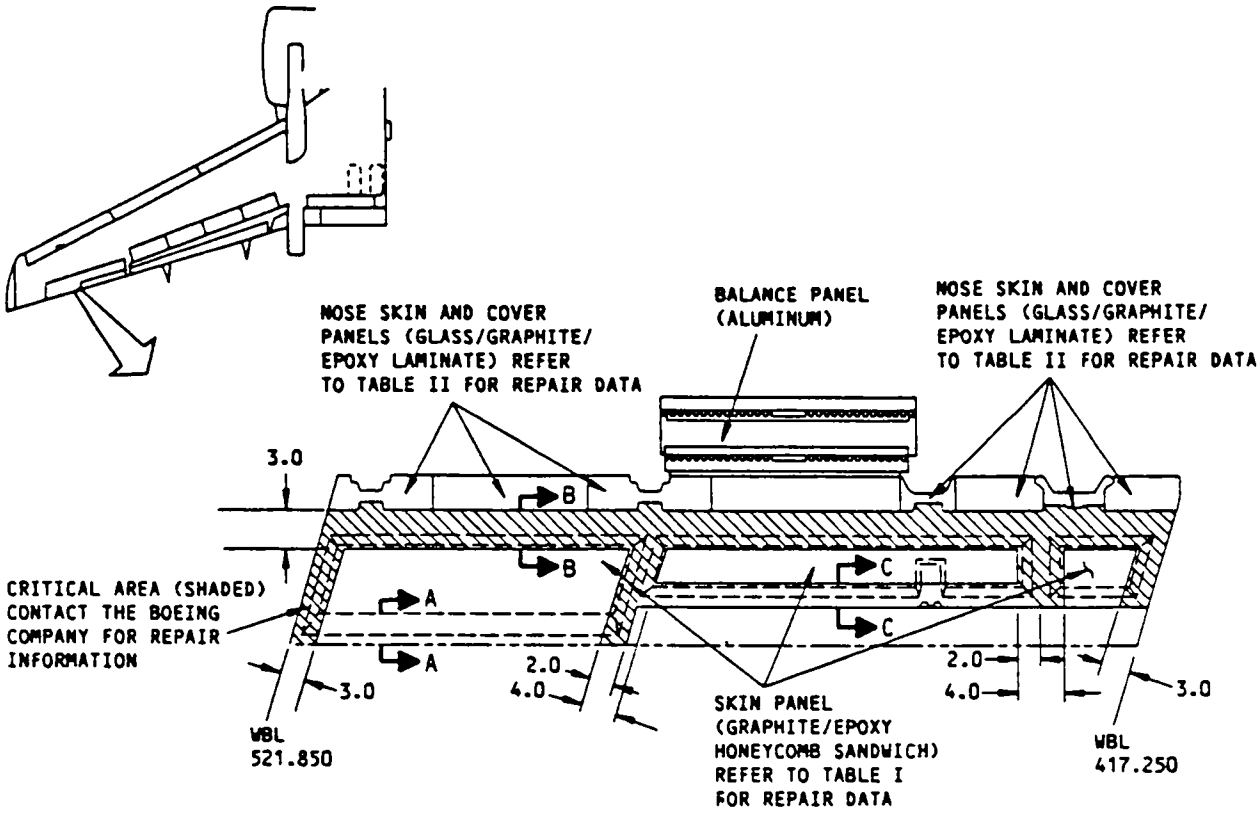

PLAN VIEW

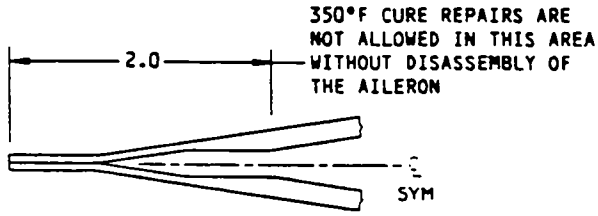

SECTION A-A

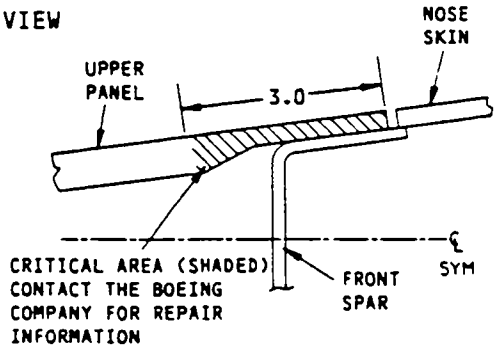

SECTION B-B

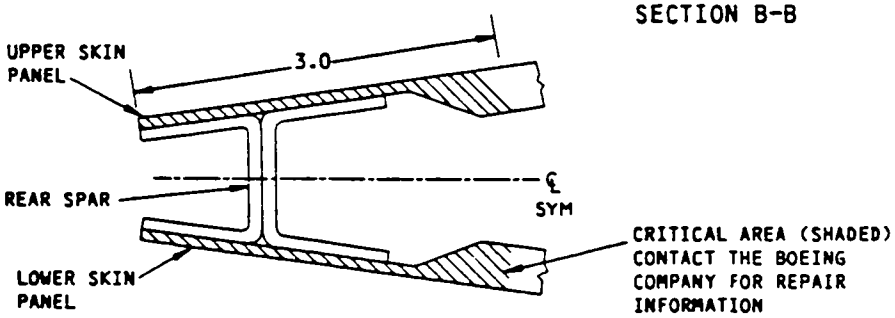

SECTION C-C

Aileron Skin Repair (Graphite Composite Ailerons)
Figure 1 (Sheet 1)

136848

DAMAGE	INTERIM REPAIRS [B]	PERMANENT REPAIRS		
	WET LAYUP 150°F CURE (51-40-12)	WET LAYUP 250°F CURE (51-40-15)	250°F CURE (51-40-13)	350°F CURE (51-40-14)
HOLES	2.0 INCH MAXIMUM DIAMETER NOT TO BE MORE THAN 30% OF SMALLEST DIMENSION ACROSS HONEYCOMB PANEL AT THE DAMAGE LOCATION. REPAIR AS GIVEN IN SRM 51-40-12, REPAIR 14. [A]	5.0 INCH MAXIMUM DIAMETER NOT TO BE MORE THAN 50% OF SMALLEST DIMENSION ACROSS HONEYCOMB PANEL AT THE DAMAGE LOCATION. USE TWO EXTRA PLIES PER FACESHEET REPAIRED. [C]	5.0 INCH MAXIMUM DIAMETER NOT TO BE MORE THAN 50% OF SMALLEST DIMENSION ACROSS HONEYCOMB PANEL AT THE DAMAGE LOCATION. USE TWO EXTRA PLIES PER FACESHEET REPAIRED. [C]	NO SIZE LIMIT
CRACKS	UP TO 5.0 INCHES LONG, REPAIR AS GIVEN IN SRM 51-40-12, REPAIR 14. [A]	USE SAME LIMITS AND REQUIREMENTS AS FOR HOLES.		
DELAMI-NATION	USE SAME LIMITS AS FOR HOLES AND REPAIR AS GIVEN IN SRM 51-40-12, REPAIR 14. [A]	USE SAME LIMITS AND REQUIREMENTS AS FOR HOLES.		
NICKS AND GOUGES	IF FIBER DAMAGE OR DELAMINATION EXISTS, USE SAME LIMITS AS FOR HOLES AND REPAIR AS GIVEN IN SRM 51-40-12, REPAIR 14. [A]	IF THERE IS NO FIBER DAMAGE OR DELAMINATION, FILL NICKS OR GOUGES AS GIVEN IN SRM 51-40-12. IF FIBER DAMAGE OF DELAMINATION EXISTS, USE SAME LIMITS AND REQUIREMENTS AS FOR HOLES.		
DENTS	USE SAME LIMITS AS FOR HOLES AND REPAIR AS GIVEN IN SRM 51-40-12, REPAIR 14. [A]	USE SAME LIMITS AND REQUIREMENTS AS FOR HOLES.		

REPAIR DATA FOR 350°F CURE HONEYCOMB PANELS
TABLE I

NOTES

- THESE REPAIRS WILL NOT HAVE AN EFFECT ON A STRUCTURALLY SIGNIFICANT ITEM (SSI) GIVEN IN SRM 51-00-4, FIG. 3. THUS, NO CHANGE TO THE SUPPLEMENTAL STRUCTURAL INSPECTION DOCUMENT (SSID) INSPECTION PROGRAM IS NECESSARY.
- REFER TO SRM 51-10 FOR INVESTIGATION AND CLEANUP OF DAMAGE.
- REFINISH REWORKED AREAS AS GIVEN IN AMM 51-20.
- REFER TO SRM 51-70 FOR AERODYNAMIC SMOOTHNESS REQUIREMENTS. WHERE THE DAMAGE EXCEEDS THE LIMITS SHOWN IN SRM 51-70, CONSIDERATION SHOULD BE GIVEN TO THE LOSS OF PERFORMANCE INVOLVED.
- WHERE NO REPAIR IS SPECIFIED, USE THE REPAIR INDEX IN THE APPROPRIATE REPAIR SECTION OF SRM 51-40 TO DETERMINE THE REPAIR TO BE USED.

[A] LIMITED TO REPAIR OF DAMAGE TO ONE FACESHEET SKIN AND HONEYCOMB CORE. ONE REPAIR PER SQUARE FOOT OF AREA AND MINIMUM OF 6.0 INCHES (EDGE TO EDGE) FROM ANY OTHER DAMAGE (ON EITHER SURFACE OF PANEL), FASTENER HOLE, OR EDGE OF PANEL.

[B] INSPECT INTERIM REPAIR USING NDI METHODS AS GIVEN IN SRM 51-40-12 EVERY AIRPLANE "2A" CHECK. PERMANENT REPAIR IS REQUIRED IF ANY DETERIORATION IS EVIDENT. THESE REPAIRS HAVE FAA APPROVAL CONTINGENT ON ACCOMPLISHMENT OF THE INSPECTIONS AT THE REQUIRED INTERVALS.

[C] ONE REPAIR PER SQUARE FOOT OF AREA AND A MINIMUM OF 6.0 INCHES (EDGE TO EDGE) FROM ANY OTHER DAMAGE (ON EITHER SURFACE OF PANEL), FASTENER HOLE, OR EDGE OF PANEL.

[D] ONE REPAIR PER SQUARE FOOT OF AREA AND A MINIMUM OF 3.0 INCHES (EDGE TO EDGE) FROM ANY OTHER DAMAGE (ON EITHER SURFACE OF LAMINATE), FASTENER HOLE, OR EDGE OF PANEL.

Aileron Skin Repair (Graphite Composite Ailerons)
Figure 1 (Sheet 2)

BOEING PROPRIETARY - Copyright © - Unpublished Work - See title page for details.

DAMAGE	INTERIM REPAIRS [B]	PERMANENT REPAIRS		
	WET LAYUP 150°F CURE (51-40-12)	WET LAYUP 250°F CURE (51-40-15)	250°F CURE (51-40-13)	350°F CURE (51-40-14)
HOLES	2.0 MAX DIA NOT TO EXCEED 30% OF SMALLEST DIMENSION ACROSS LAMINATE PANEL AT THE DAMAGE LOCATION. REPAIR PER 51-40-12, REPAIR 14.[D]	4.0 MAX DIA NOT TO EXCEED 50% OF SMALLEST DIMENSION ACROSS LAMINATE PANEL AT THE DAMAGE LOCATION. USE TWO EXTRA PLIES PER SIDE [D]	4.0 MAX DIA NOT TO EXCEED 50% OF SMALLEST DIMENSION ACROSS LAMINATE PANEL AT THE DAMAGE LOCATION. USE TWO EXTRA PLIES PER SIDE	NO SIZE LIMIT
CRACKS	UP TO 4.0 INCHES LONG, REPAIR PER 51-40-12, REPAIR 14.[D]	USE SAME LIMITS AND REQUIREMENTS AS FOR HOLES.		
DELAMI-NATION	USE SAME LIMITS AS FOR HOLES AND REPAIR PER 51-40-12, REPAIR 14.[D]	USE SAME LIMITS AND REQUIREMENTS AS FOR HOLES.		
NICKS AND GOUGES	IF FIBER DAMAGE OR DELAMINATION EXISTS, USE SAME LIMITS AS FOR HOLES AND REPAIR PER 51-40-12, REPAIR 14.[D]	IF THERE IS NO FIBER DAMAGE OR DELAMINATION, FILL NICKS OR GOUGES PER 51-40-12. IF FIBER DAMAGE OR DELAMINATION EXISTS, USE SAME LIMITS AND REQUIREMENTS AS FOR HOLES.		
DENTS	USE SAME LIMITS AS FOR HOLES AND REPAIR PER 51-40-12, REPAIR 14.[D]	UP TO 2.0 IN. DIA WITH NO FIBER DAMAGE OR DELAMINATION, REPAIR PER 51-40-12, REPAIR 12.[D] IF OVER 2.0 IN. DIA OR WITH FIBER DAMAGE OR DELAMINATION, USE SAME LIMITS AND REQUIREMENTS AS FOR HOLES.		

REPAIR DATA FOR 350°F CURE LAMINATES

TABLE II

Aileron Skin Repair (Graphite Composite Ailerons)
Figure 1 (Sheet 3)

136897

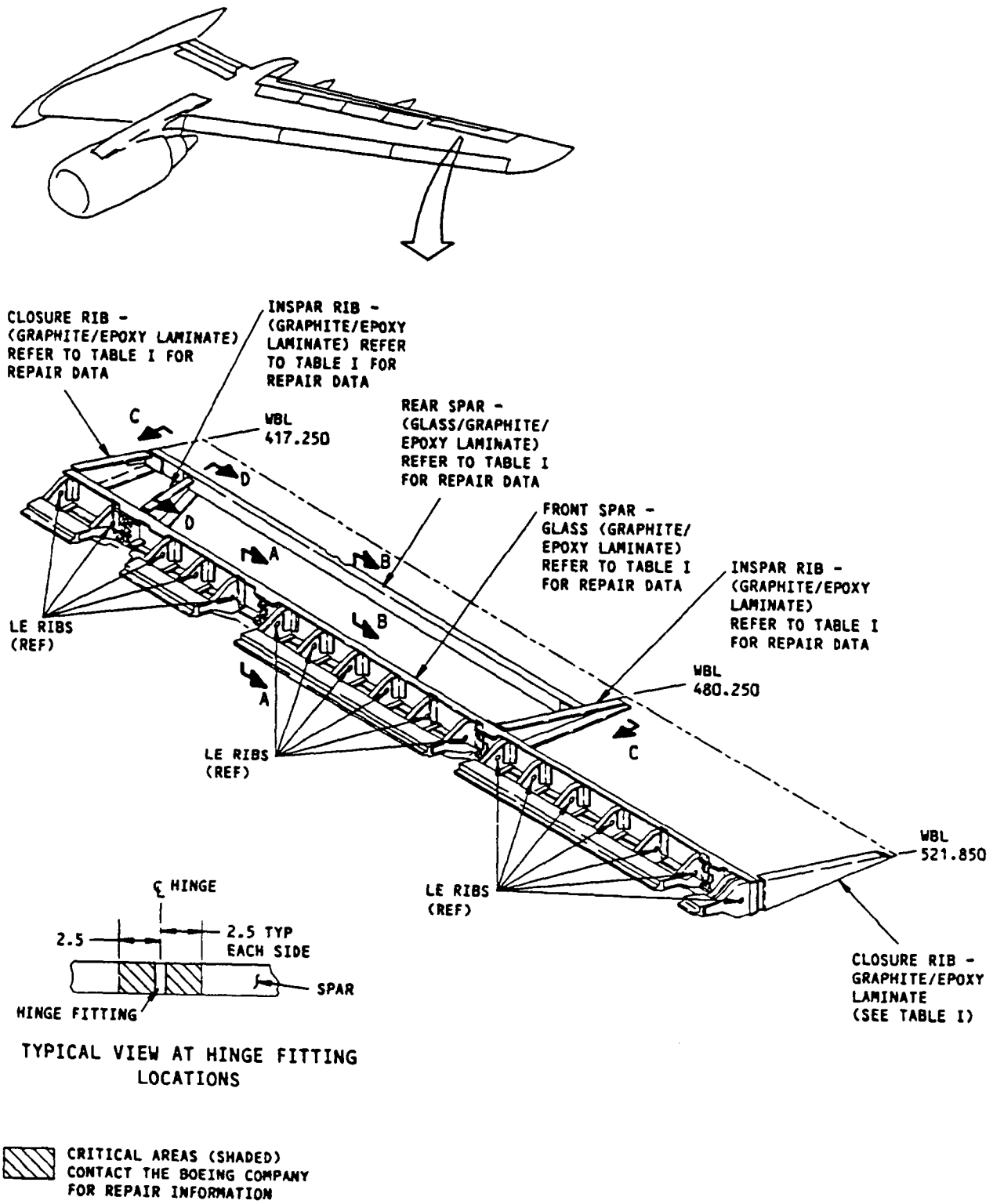

Aileron Structure Repair (Graphite Composite Ailerons)
Figure 2 (Sheet 1)

136862

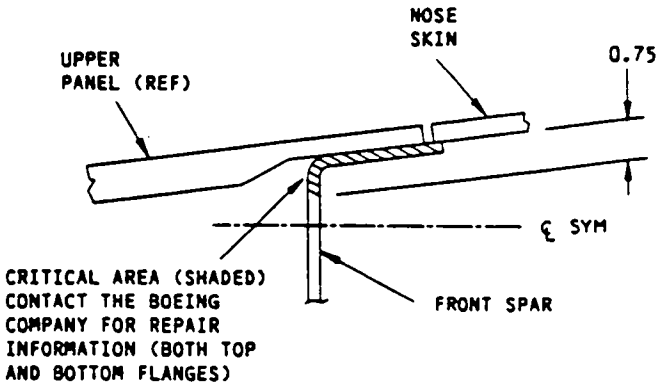

SECTION A-A

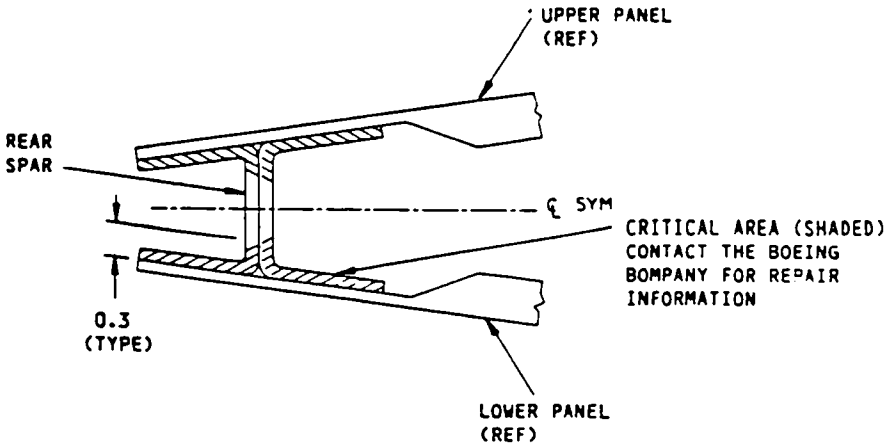

SECTION B-B

Aileron Structure Repair (Graphite Composite Ailerons)
Figure 2 (Sheet 2)

136849

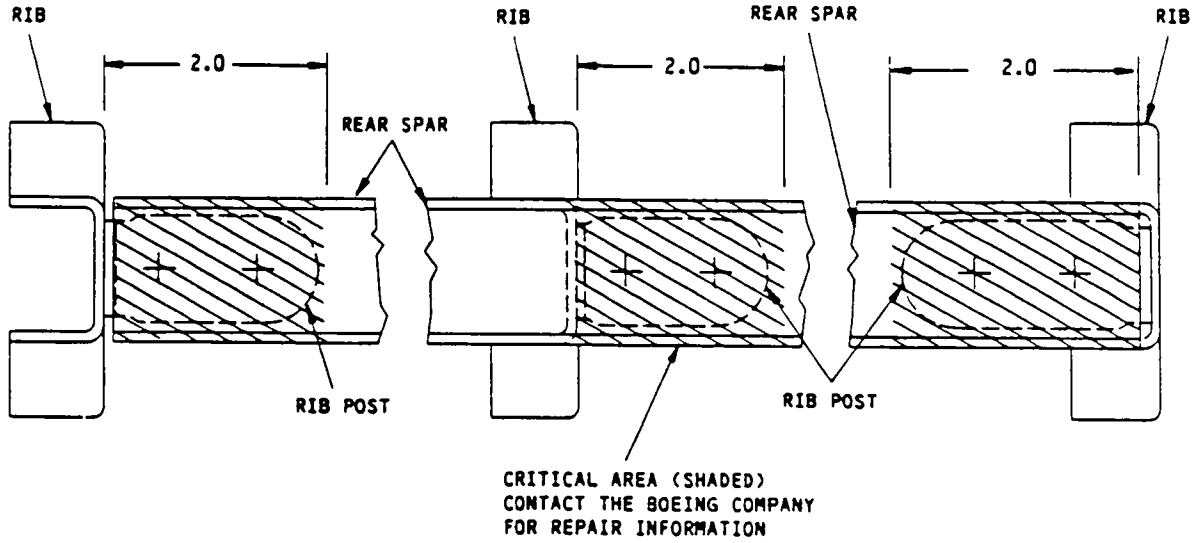

REAR VIEW OF REAR SPAR AT RIB LOCATIONS
(VIEW OF FRONT SPAR AT RIBS SIMILAR)
SECTION C-C

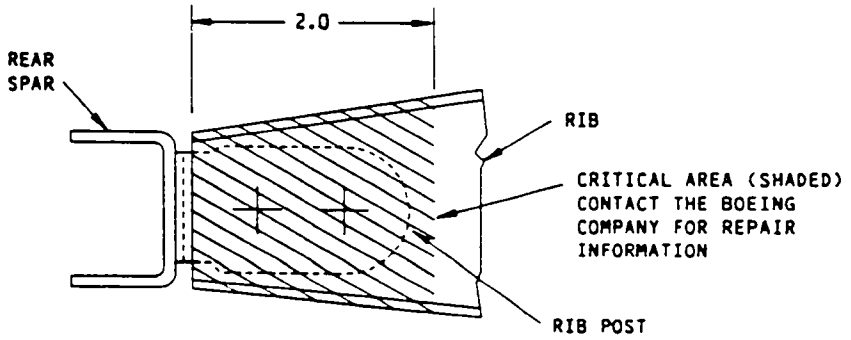

VIEW OF RIB AT REAR SPAR
(VIEW OF RIB AT FRONT SPAR SIMILAR)
SECTION D-D

Aileron Structure Repair (Graphite Composite Ailerons)
Figure 2 (Sheet 3)

136863

STRUCTURAL REPAIR

DAMAGE	INTERIM REPAIRS [B]	PERMANENT REPAIRS		
	WET LAYUP 150°F CURE (51-40-12)	WET LAYUP 250°F CURE (51-40-15)	250°F CURE (51-40-13)	350°F CURE (51-40-14)
HOLES	1.5 INCH MAXIMUM DIAMETER NOT TO BE MORE THAN 30% OF SMALLEST DIMENSION ACROSS LAMINATE PANEL AT THE DAMAGE LOCATION. REPAIR AS GIVEN IN SRM 51-40-12, REPAIR 14. [A]	3.0 INCH MAXIMUM DIAMETER NOT TO BE MORE THAN 50% OF SMALLEST DIMENSION ACROSS LAMINATE PANEL AT THE DAMAGE LOCATION. USE TWO EXTRA PLIES PER SIDE. [A]	3.0 INCH MAXIMUM DIAMETER NOT TO BE MORE THAN 50% OF SMALLEST DIMENSION ACROSS LAMINATE PANEL AT THE DAMAGE LOCATION. USE TWO EXTRA PLIES PER SIDE.	NO SIZE LIMIT
CRACKS	UP TO 3.0 INCHES LONG, REPAIR AS GIVEN IN SRM 51-40-12, REPAIR 14. [A]	USE SAME LIMITS AND REQUIREMENTS AS FOR HOLES.		
DELAMI-NATION	USE SAME LIMITS AS FOR HOLES AND REPAIR AS GIVEN IN SRM 51-40-12, REPAIR 14. [A]	USE SAME LIMITS AND REQUIREMENTS AS FOR HOLES.		
NICKS AND GOUGES	IF FIBER DAMAGE OR DELAMINATION EXISTS, USE SAME LIMITS AS FOR HOLES AND REPAIR AS GIVEN IN SRM 51-40-12, REPAIR 14. [A]	IF THERE IS NO FIBER DAMAGE OR DELAMINATION, FILL NICKS OR GOUGES AS GIVEN IN SRM 51-40-12. IF FIBER DAMAGE OR DELAMINATION EXISTS, USE SAME LIMITS AND REQUIREMENTS AS FOR HOLES.		
DENTS	USE SAME LIMITS AS FOR HOLES AND REPAIR AS GIVEN IN SRM 51-40-12, REPAIR 14. [A]	UP TO 2.0 INCHES IN DIAMETER WITH NO FIBER DAMAGE OR DELAMINATION, REPAIR AS GIVEN IN SRM 51-40-12, REPAIR 12. [A] IF OVER 2.0 INCHES IN DIAMETER OR WITH FIBER DAMAGE OR DELAMINATION, USE SAME LIMITS AND REQUIREMENTS AS FOR HOLES.		

REPAIR DATA FOR 350°F CURE LAMINATES
TABLE I

NOTES

- THESE REPAIRS WILL NOT HAVE AN EFFECT ON A STRUCTURALLY SIGNIFICANT ITEM (SSI) GIVEN IN SRM 51-00-4, FIG. 3. THUS, NO CHANGE TO THE SUPPLEMENTAL STRUCTURAL INSPECTION DOCUMENT (SSID) INSPECTION PROGRAM IS NECESSARY.
- REFER TO SRM 51-10 FOR INVESTIGATION AND CLEANUP OF DAMAGE.
- REFINISH REWORKED AREAS AS GIVEN IN SRM 51-20.
- REFER TO SRM 51-70 FOR AERODYNAMIC SMOOTHNESS REQUIREMENTS. WHERE THE DAMAGE EXCEEDS THE LIMITS SHOWN IN SRM 51-70, CONSIDERATION SHOULD BE GIVEN TO THE LOSS OF PERFORMANCE INVOLVED.
- WHERE NO REPAIR IS SPECIFIED, USE THE REPAIR INDEX IN THE APPROPRIATE REPAIR SECTION OF SRM 51-40 TO DETERMINE THE REPAIR TO BE USED.

[A] ONE REPAIR PER SQUARE FOOT OF AREA AND A MINIMUM OF 3.0 INCHES (EDGE TO EDGE) FROM ANY OTHER DAMAGE (ON EITHER SIDE OF PART), FASTENER HOLE, OR EDGE OF PANEL.

[B] INSPECT INTERIM REPAIR USING NDI METHODS AS GIVEN IN SRM 51-40-12 EVERY AIRPLANE "2A" CHECK. PERMANENT REPAIR IS REQUIRED IF ANY DETERIORATION IS EVIDENT. THESE REPAIRS HAVE FAA APPROVAL CONTINGENT ON ACCOMPLISHMENT OF THE INSPECTIONS AT THE REQUIRED INTERVALS.

Aileron Structure Repair (Graphite Composite Ailerons)
Figure 2 (Sheet 4)

BOEING PROPRIETARY - Copyright © - Unpublished Work - See title page for details.